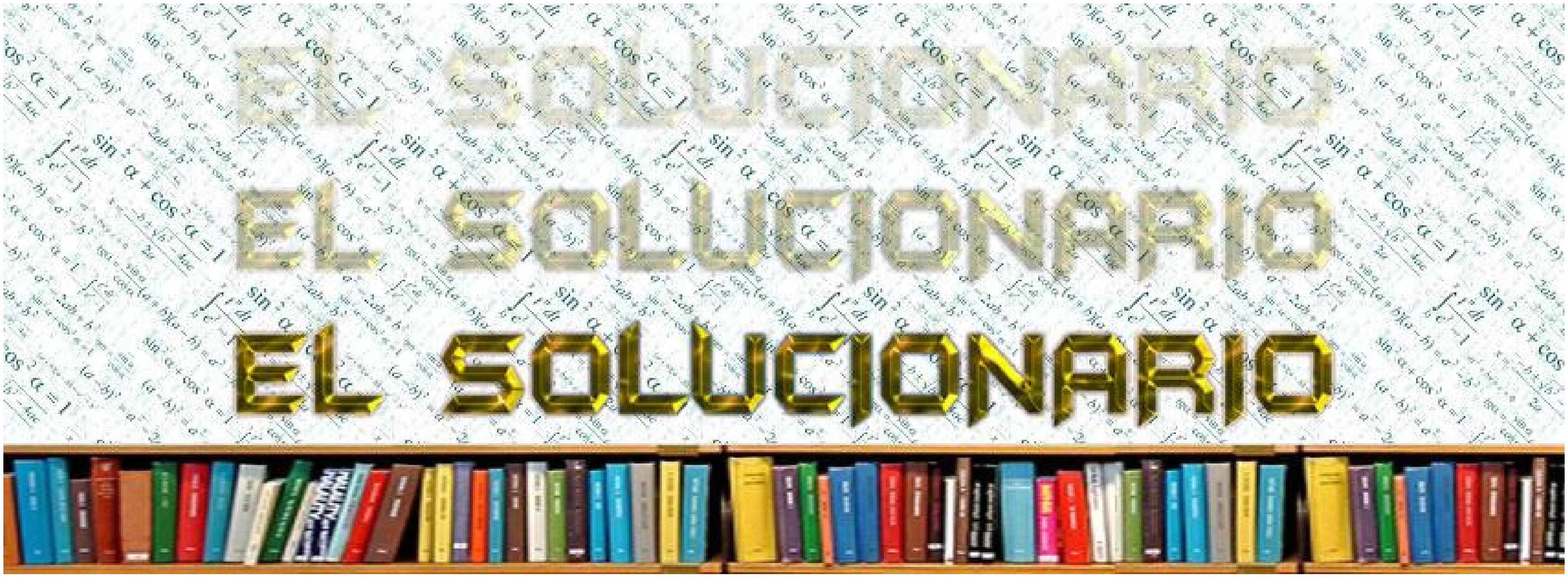

http://www.elsolucionario.blogspot.com

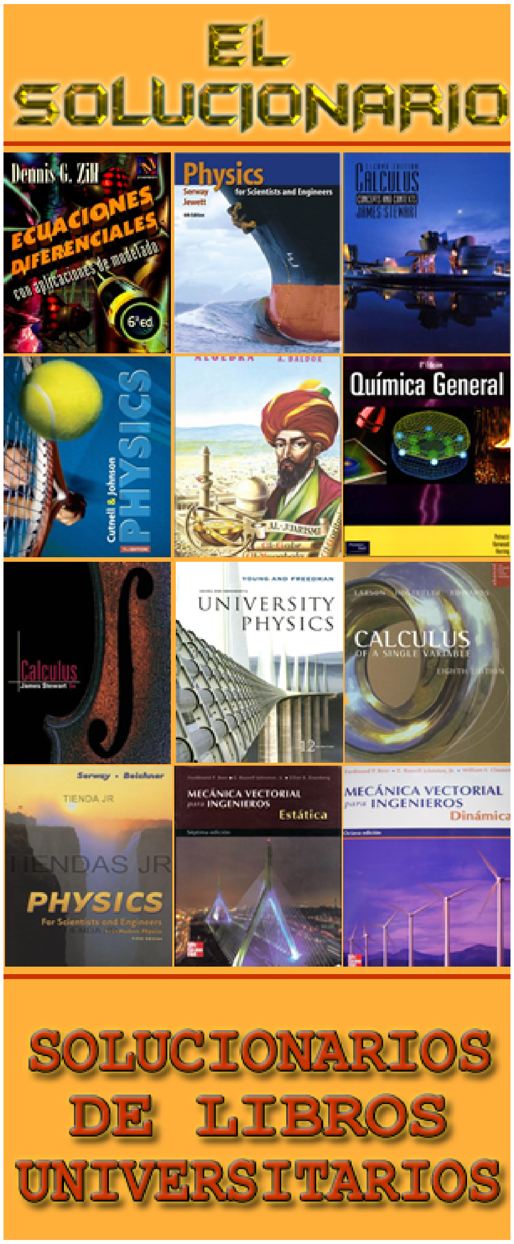

LIBROS UNIVERISTARIOS
Y SOLUCIONARIOS DE
MUCHOS DE ESTOS LIBROS

LOS SOLUCIONARIOS
CONTIENEN TODOS LOS
EJERCICIOS DEL LIBRO
RESUELTOS Y EXPLICADOS
DE FORMA CLARA

VISITANOS PARA
DESARGALOS GRATIS.

Solution Manual

FOR

Fundamentals of Electric Circuits

by

Charles Alexander

Chapter 1, Solution 1

(a) q = 6.482x10^{17} x [-1.602x10^{-19} C] = **-0.10384 C**

(b) q = 1. 24x10^{18} x [-1.602x10^{-19} C] = **-0.19865 C**

(c) q = 2.46x10^{19} x [-1.602x10^{-19} C] = **-3.941 C**

(d) q = 1.628x10^{20} x [-1.602x10^{-19} C] = **-26.08 C**

Chapter 1, Solution 2

(a) i = dq/dt = 3 mA
(b) i = dq/dt = (16t + 4) A
(c) i = dq/dt = ($-3e^{-t} + 10e^{-2t}$) nA
(d) i=dq/dt = $1200\pi \cos 120\pi t$ pA
(e) i =dq/dt = $-e^{-4t}(80\cos 50t + 1000\sin 50t)\ \mu\mathbf{A}$

Chapter 1, Solution 3

(a) $q(t) = \int i(t)dt + q(0) = \underline{(3t+1)\ \ C}$

(b) $q(t) = \int (2t+s)\,dt + q(v) = \underline{(t^2+5t)\ \ mC}$

(c) $q(t) = \int 20\cos\left(10t + \pi/6\right) + q(0) = \underline{(2\sin(10t+\pi/6)+1)\mu C}$

(d) $$q(t) = \int 10e^{-30t}\sin 40t + q(0) = \frac{10e^{-30t}}{900+1600}(-30\sin 40t - 40\cos t)$$
$$= \underline{-e^{-30t}(0.16\cos 40\,t + 0.12\ \sin 40t)\ C}$$

Chapter 1, Solution 4

$$q = \int i dt = \int\ 5\sin 6\,\pi\,t\,dt = \frac{-5}{6\pi}\cos 6\pi\,t\Big|_0^{10}$$
$$= \frac{5}{6\pi}\left(1-\cos 0.06\pi\right) = \underline{4.698\ mC}$$

Chapter 1, Solution 5

$$q = \int i dt = \int e^{-2t} dt \text{ mC} = -\frac{1}{2} e^{-2t} \Big|_0^2$$

$$= \frac{1}{2}(1 - e^4) \text{ mC} = \underline{490\ \mu C}$$

Chapter 1, Solution 6

(a) At t = 1ms, $i = \frac{dq}{dt} = \frac{80}{2} = \underline{40 \text{ mA}}$

(b) At t = 6ms, $i = \frac{dq}{dt} = \underline{0 \text{ mA}}$

(c) At t = 10ms, $i = \frac{dq}{dt} = \frac{80}{4} = \underline{-20 \text{ mA}}$

Chapter 1, Solution 7

$$i = \frac{dq}{dt} = \begin{bmatrix} 25\text{A}, & 0 < t < 2 \\ -25\text{A}, & 2 < t < 6 \\ 25\text{A}, & 6 < t < 8 \end{bmatrix}$$

which is sketched below:

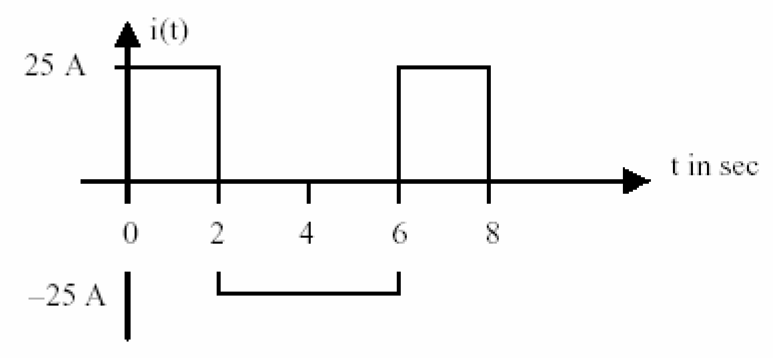

Chapter 1, Solution 8

$$q = \int idt = \frac{10 \times 1}{2} + 10 \times 1 = \underline{15\ \mu C}$$

Chapter 1, Solution 9

(a) $q = \int idt = \int_0^1 10\,dt = \underline{10\ C}$

(b) $q = \int_0^3 idt = 10 \times 1 + \left(10 - \frac{5 \times 1}{2}\right) + 5 \times 1$

$= 15 + 10 - 25 = \underline{22.5\ C}$

(c) $q = \int_0^5 idt = 10 + 10 + 10 = \underline{30\ C}$

Chapter 1, Solution 10

$$q = ixt = 8x10^3\,x15x10^{-6} = 120\ \mu\mathbf{C}$$

Chapter 1, Solution 11

$q = it = 85\ x10^{-3}\ x\ 12\ x\ 60\ x\ 60 = 3{,}672\ C$

$E = pt = ivt = qv = 3672\ x1.2 = 4406.4\ J$

Chapter 1, Solution 12

For 0 < t < 6s, assuming q(0) = 0,

$$q(t) = \int_0^t idt + q(0) = \int_0^t 3tdt + 0 = 1.5t^2$$

At t=6, $q(6) = 1.5(6)^2 = 54$

For 6 < t < 10s,

$$q(t) = \int_6^t idt + q(6) = \int_6^t 18dt + 54 = 18t - 54$$

At t=10, q(10) = 180 – 54 = 126

For 10<t<15s,

$$q(t) = \int_{10}^t idt + q(10) = \int_{10}^t (-12)dt + 126 = -12t + 246$$

At t=15, q(15) = -12x15 + 246 = 66

For 15<t<20s,

$$q(t) = \int_{15}^t 0dt + q(15) = 66$$

Thus,

$$q(t) = \begin{cases} 1.5t^2 \ \mathbf{C}, & \mathbf{0 < t < 6s} \\ 18t - 54 \ \mathbf{C}, & \mathbf{6 < t < 10s} \\ -12t + 246 \ \mathbf{C}, & \mathbf{10 < t < 15s} \\ 66 \ \mathbf{C}, & \mathbf{15 < t < 20s} \end{cases}$$

The plot of the charge is shown below.

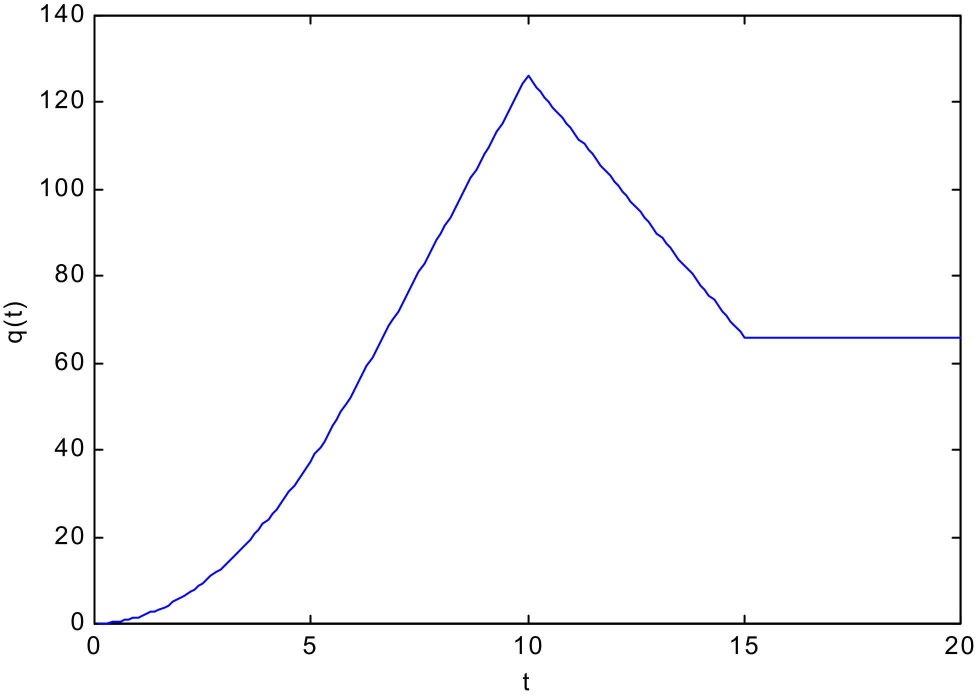

Chapter 1, Solution 13

$$w = \int_0^2 vidt = \int_0^2 1200\cos^2 4t\,dt$$
$$= 1200\int_0^2 (2\cos 8t - 1)dt \text{ (since, } \cos^2 x = 2\cos 2x - 1)$$
$$= 1200\left(\frac{2}{8}\sin 8t - t\right)\Big|_0^2 = 1200\left(\frac{1}{4}\sin 16 - 2\right)$$
$$= \underline{-2.486 \text{ kJ}}$$

Chapter 1, Solution 14

(a) $$q = \int idt = \int_0^1 10\left(1 - e^{-0.5t}\right)dt = 10\left(t + 2e^{-0.5t}\right)\Big|_0^1$$
$$= 10\left(1 + 2e^{-0.5} - 2\right) = \underline{2.131 \text{ C}}$$

(b) $p(t) = v(t)i(t)$
$p(1) = 5\cos 2 \cdot 10(1- e^{-0.5}) = (-2.081)(3.935)$
$= \underline{\mathbf{-8.188\ W}}$

Chapter 1, Solution 15

(a) $$q = \int idt = \int_0^2 3e^{-2t}dt = \frac{-3}{2}e^{2t}\Big|_0^2$$
$$= -1.5\left(e^{-2} - 1\right) = \underline{1.297 \text{ C}}$$

(b) $$v = \frac{5di}{dt} = -6e^{2t}(5) = -30e^{-2t}$$
$$p = vi = \underline{-90\,e^{-4t}\,W}$$

(c) $$w = \int pdt = -90\int_0^3 e^{-4t}\,dt = \frac{-90}{-4}e^{-4t}\Big|_0^3 = \underline{-22.5 \text{ J}}$$

Chapter 1, Solution 16

$$i(t) = \begin{bmatrix} 25t\ mA & 0 < t < 2 \\ 100 - 25t\ mA & 2 < t < 4 \end{bmatrix}, \quad v(t) = \begin{bmatrix} 10t\ V & 0 < t < 1 \\ 10\ V & 1 < t < 3 \\ 40 - 10t\ V & 3 < t < 4 \end{bmatrix}$$

$$w = \int v(t)i(t)dt = \int_0^1 10 + (25t)dt + \int_1^2 10(25t)dt + \int_2^3 10(100 - 25t)dt + \int_3^4 (40 - 10t)(100 - 25t)mJ$$

$$= \frac{250}{3}t^3\Big|_0^1 + \frac{250}{2}\Big|_1^2 + 250\left(4t - \frac{t^2}{2}\right)\Big|_2^3 + \int_3^4 250(4 - t)^2 dt$$

$$= \frac{250}{3} + \frac{250}{2}(3) + 250\left(12 - \frac{9}{2} - 8 + 2\right) + 250\left(16t - 4t^2 + \frac{t^2}{3}\right)\Big|_3^4$$

$= \underline{916.7\ mJ}$

Chapter 1, Solution 17

$\Sigma p = 0 \rightarrow -205 + 60 + 45 + 30 + p_3 = 0$

$p_3 = 205 - 135 = 70$ W

Thus element 3 receives **70 W.**

Chapter 1, Solution 18

$p_1 = 30(-10) =$ **-300 W**
$p_2 = 10(10) =$ **100 W**
$p_3 = 20(14) =$ **280 W**
$p_4 = 8(-4) =$ **-32 W**
$p_5 = 12(-4) =$ **-48 W**

Chapter 1, Solution 19

$$\sum p = 0 \quad \longrightarrow \quad -4I_s - 2x6 - 13x2 + 5x10 = 0 \quad \longrightarrow \quad I_s = 3\ \mathbf{A}$$

Chapter 1, Solution 20

Since Σ p = 0

$-30\times6 + 6\times12 + 3V_0 + 28 + 28\times2 - 3\times10 = 0$

$72 + 84 + 3V_0 = 210$ or $3V_0 = 54$

$V_0 =$ **$\underline{18\ V}$**

Chapter 1, Solution 21

$$i = \frac{\Delta q}{\Delta t} = 4\times10^{11}\left(\frac{\text{photon}}{\text{sec}}\right)\cdot\frac{1}{8}\left(\frac{\text{electron}}{\text{photon}}\right)\cdot1.6\times10^{19}(\text{C / electron})$$

$$= \frac{4}{8}\times10^{11}\times1.6\times10^{-19}\,\text{C/s} = 0.8\times10^{-8}\,\text{C/s} = \underline{8\ \text{nA}}$$

Chapter 1, Solution 22

It should be noted that these are only typical answers.

(a)	Light bulb	**60 W, 100 W**
(b)	Radio set	**4 W**
(c)	TV set	**110 W**
(d)	Refrigerator	**700 W**
(e)	PC	**120 W**
(f)	PC printer	**18 W**
(g)	Microwave oven	**1000 W**
(h)	Blender	**350 W**

Chapter 1, Solution 23

(a) $i = \frac{p}{v} = \frac{1500}{120} = \underline{12.5\ \text{W}}$

(b) $w = pt = 1.5\times10^3\times45\times60\cdot\text{J} = 1.5\times\frac{45}{60}\,\text{kWh} = \underline{1.125\ \text{kWh}}$

(c) Cost = 1.125 × 10 = **$\underline{11.25\ \text{cents}}$**

Chapter 1, Solution 24

p = vi = 110 x 8 = 880 W

Chapter 1, Solution 25

$$\text{Cost} = 1.2\text{ kW} \times \frac{4}{6}\text{ hr} \times 30 \times 9\text{ cents/kWh} = \underline{21.6\text{ cents}}$$

Chapter 1, Solution 26

(a) $i = \dfrac{0.8\text{A} \cdot \text{h}}{10\text{h}} = \underline{80\text{ mA}}$

(b) p = vi = 6 × 0.08 = **<u>0.48 W</u>**

(c) w = pt = 0.48 × 10 Wh = **<u>0.0048 kWh</u>**

Chapter 1, Solution 27

(a) Let $\text{T} = 4\text{h} = 4 \times 36005$

$$q = \int i\text{dt} = \int_0^{\text{T}} 3\text{dt} = 3\text{T} = 3 \times 4 \times 3600 = \underline{43.2\text{ kC}}$$

(b) $$\text{W} = \int p\text{dt} = \int_0^{\text{T}} v i\text{dt} = \int_0^{T} (3)\left(10 + \frac{0.5\text{t}}{3600}\right)\text{dt}$$

$$= 3\left(10t + \frac{0.25t^2}{3600}\right)\Bigg|_0^{4\times3600} = 3\left[40 \times 3600 + 0.25 \times 16 \times 3600\right]$$

$$= \underline{475.2\text{ kJ}}$$

(c) $\text{W} = 475.2\text{ kWs}, \quad (\text{J} = \text{Ws})$

$$\text{Cost} = \frac{475.2}{3600}\text{ kWh} \times 9\text{ cent} = \underline{1.188\text{ cents}}$$

Chapter 1, Solution 28

(a) $i = \frac{P}{V} = \frac{30}{120} = \underline{0.25\ \text{A}}$

(b) $\text{W} = \text{pt} = 30 \times 365 \times 24\ \text{Wh} = 262.8\ \text{kWh}$

$\text{Cost} = \$0.12 \times 262.8 = \underline{\$31.54}$

Chapter 1, Solution 29

$$w = pt = 1.2\text{kW}\frac{(20+40+15+45)}{60}\text{hr} + 1.8\ \text{kW}\left(\frac{30}{60}\right)\text{hr}$$

$$= 2.4 + 0.9 = 3.3\ \text{kWh}$$

$\text{Cost} = 12\ \text{cents} \times 3.3 = \underline{39.6\ \text{cents}}$

Chapter 1, Solution 30

Energy = (52.75 – 5.23)/0.11 = 432 kWh

Chapter 1, Solution 31

Total energy consumed = 365(4 +8) W

Cost = \$0.12 x 365 x 12 = \$526.60

Chapter 1, Solution 32

$$w = pt = 1.2\text{kW}\frac{(20+40+15+45)}{60}\text{hr} + 1.8\ \text{kW}\left(\frac{30}{60}\right)\text{hr}$$

$$= 2.4 + 0.9 = 3.3\ \text{kWh}$$

$\text{Cost} = 12\ \text{cents} \times 3.3 = \underline{39.6\ \text{cents}}$

Chapter 1, Solution 33

$$i = \frac{dq}{dt} \to q = \int idt = 2000 \times 3 \times 10^3 = \underline{6\text{ C}}$$

Chapter 1, Solution 34

(b) Energy = $\sum pt$ = 200 x 6 + 800 x 2 + 200 x 10 + 1200 x 4 + 200 x 2
= 10,000 kWh

(c) Average power = 10,000/24 = 416.67 W

Chapter 1, Solution 35

(a) $$\text{W} = \int p(t)dt = 400 \times 6 + 1000 \times 2 + 200 \times 12 \times 1200 \times 2 + 400 \times 2$$
$$= 7200 + 2800 = \underline{10.4\text{ kWh}}$$

(b) $$\frac{10.4\text{ kW}}{24\text{ h}} = \underline{433.3\text{ W/h}}$$

Chapter 1, Solution 36

(a) $$\text{i} = \frac{160\text{A} \cdot \text{h}}{40} = \underline{4\text{ A}}$$

(b) $$\text{t} = \frac{160\text{Ah}}{0.001\text{A}} = \frac{160{,}000\text{h}}{24\text{h / day}} = \underline{6{,}667\text{ days}}$$

Chapter 1, Solution 37

$$\text{q} = 5 \times 10^{20}\left(-1.602 \times 10^{-19}\right) = -80.1\text{ C}$$
$$\text{W} = qv = -80.1 \times 12 = \underline{-901.2\text{ J}}$$

Chapter 1, Solution 38

$P = 10 \text{ hp} = 7460 \text{ W}$

$W = pt = 7460 \times 30 \times 60 \text{ J} = \underline{\mathbf{13.43 \times 10^6 \text{ J}}}$

Chapter 1, Solution 39

$$p = vi \rightarrow i = \frac{p}{v} = \frac{2 \times 10^3}{120} = \underline{16.667 \text{ A}}$$

Chapter 2, Solution 1

v = iR i = v/R = (16/5) mA = **3.2 mA**

Chapter 2, Solution 2

p = v^2/R → **R** = v^2/p = 14400/60 = **240 ohms**

Chapter 2, Solution 3

R = v/i = 120/(2.5x10^{-3}) = **48k ohms**

Chapter 2, Solution 4

(a) **i** = 3/100 = **30 mA**
(b) **i** = 3/150 = **20 mA**

Chapter 2, Solution 5

n = 9; l = 7; **b** = n + l – 1 = **15**

Chapter 2, Solution 6

n = 12; l = 8; **b** = n + l –1 = **19**

Chapter 2, Solution 7

7 elements or 7 branches and 4 nodes, as indicated.

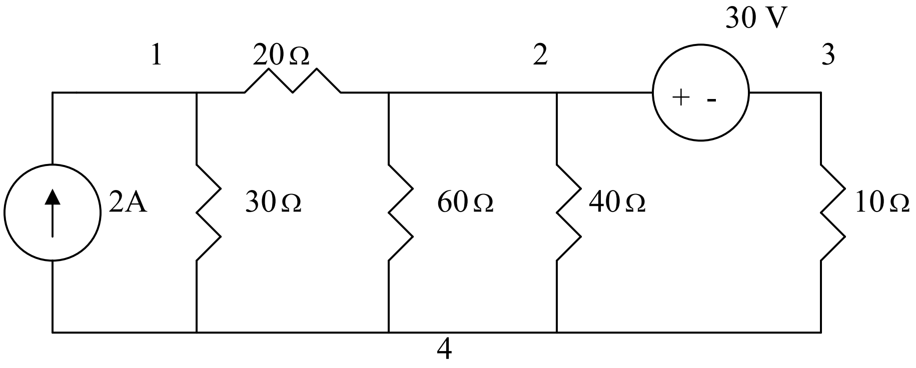

Chapter 2, Solution 8

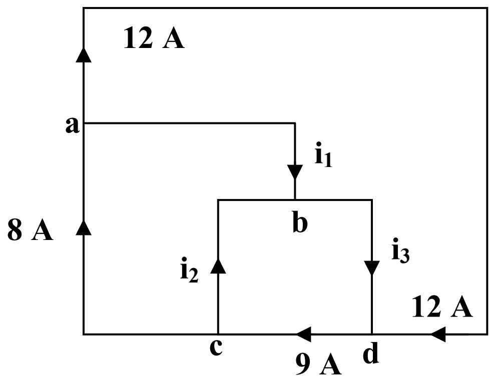

At node a, $8 = 12 + i_1 \longrightarrow$ $\underline{i_1 = -4A}$

At node c, $9 = 8 + i_2 \longrightarrow$ $\underline{i_2 = 1A}$

At node d, $9 = 12 + i_3 \longrightarrow$ $\underline{i_3 = -3A}$

Chapter 2, Solution 9

Applying KCL,

$i_1 + 1 = 10 + 2 \longrightarrow i_1 = \underline{11A}$

$1 + i_2 = 2 + 3 \longrightarrow i_2 = \underline{4A}$

$i_2 = i_3 + 3 \qquad i_3 = \underline{1A}$

Chapter 2, Solution 10

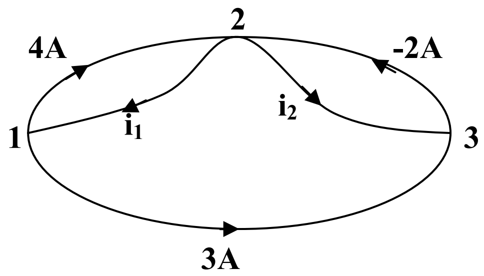

At node 1, $4 + 3 = i_1 \longrightarrow$ $i_1 = \underline{7A}$

At node 3, $3 + i_2 = -2 \longrightarrow$ $i_2 = \underline{-5A}$

Chapter 2, Solution 11

Applying KVL to each loop gives

$-8 + v_1 + 12 = 0 \longrightarrow$ **$\underline{v_1 = 4v}$**

$-12 - v_2 + 6 = 0 \longrightarrow$ **$\underline{v_2 = -6v}$**

$10 - 6 - v_3 = 0 \longrightarrow$ **$\underline{v_3 = 4v}$**

$-v_4 + 8 - 10 = 0$ **$\underline{v_4 = -2v}$**

Chapter 2, Solution 12

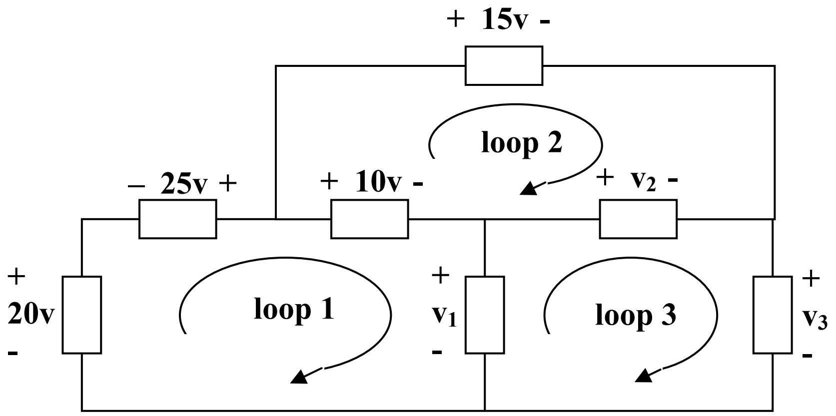

For loop 1, $-20 -25 +10 + v_1 = 0 \longrightarrow$ **$\underline{v_1 = 35v}$**

For loop 2, $-10 +15 -v_2 = 0 \longrightarrow$ **$\underline{v_2 = 5v}$**

For loop 3, $-v_1 +v_2 +v_3 = 0 \longrightarrow \underline{v_3 = 30v}$

Chapter 2, Solution 13

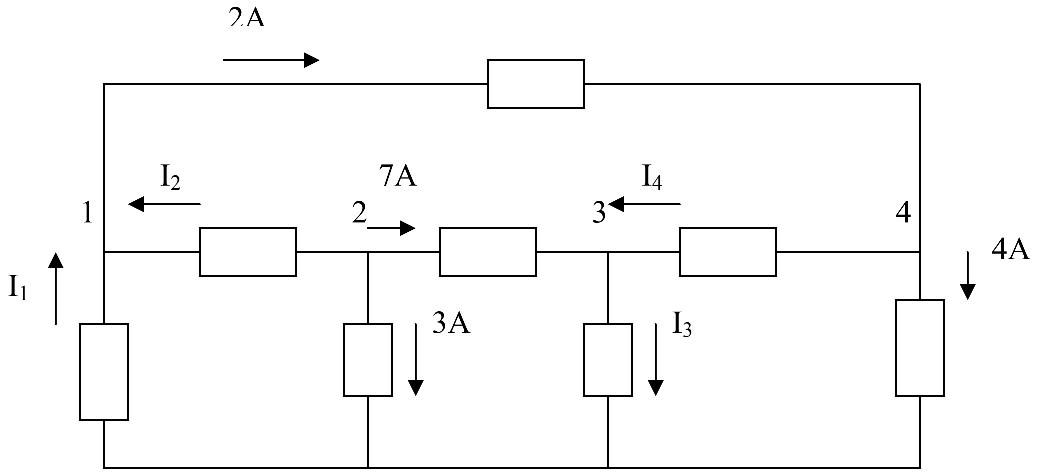

At node 2,

$$3+7+I_2=0 \longrightarrow I_2=-10A$$

At node 1,

$$I_1+I_2=2 \longrightarrow I_1=2-I_2=12A$$

At node 4,

$$2=I_4+4 \longrightarrow I_4=2-4=-2A$$

At node 3,

$$7+I_4=I_3 \longrightarrow I_3=7-2=5A$$

Hence,

$$\underline{I_1=12A, \quad I_2=-10A, \quad I_3=5A, \quad I_4=-2A}$$

Chapter 2, Solution 14

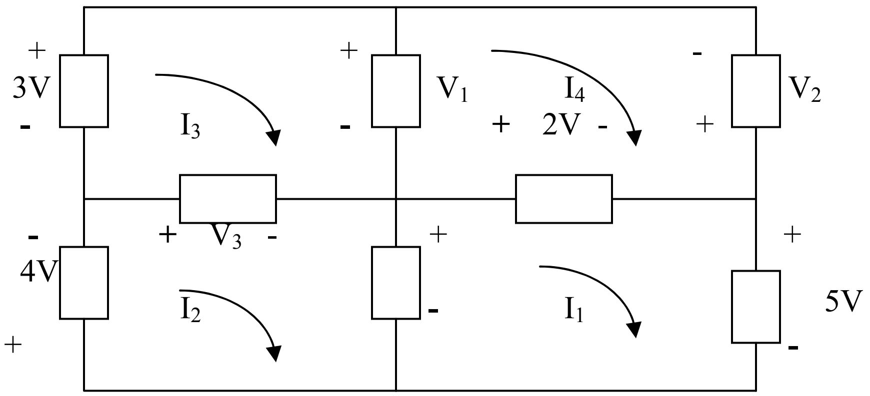

For mesh 1,

$$-V_4+2+5=0 \longrightarrow V_4=7V$$

For mesh 2,

$$+4+V_3+V_4=0 \longrightarrow V_3=-4-7=-11V$$

For mesh 3,

$$-3+V_1-V_3=0 \longrightarrow V_1=V_3+3=-8V$$

For mesh 4,

$$-V_1-V_2-2=0 \longrightarrow V_2=-V_1-2=6V$$

Thus,

$$\underline{V_1=-8V, \quad V_2=6V, \quad V_3=-11V, \quad V_4=7V}$$

Chapter 2, Solution 15

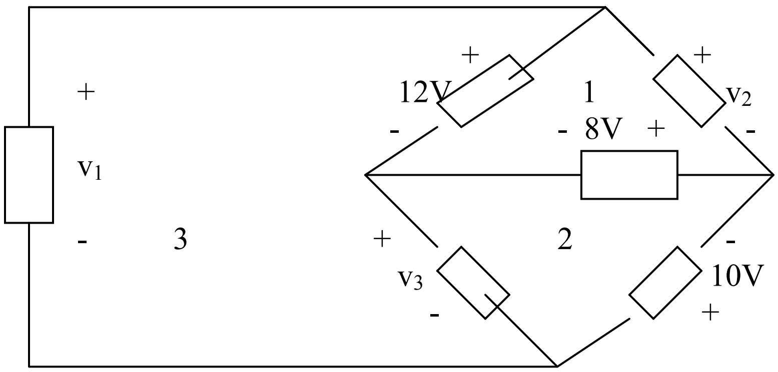

For loop 1,

$$8 - 12 + v_2 = 0 \longrightarrow v_2 = 4V$$

For loop 2,

$$-v_3 - 8 - 10 = 0 \longrightarrow v_3 = -18V$$

For loop 3,

$$-v_1 + 12 + v_3 = 0 \longrightarrow v_1 = -6V$$

Thus,

$$\underline{v_1 = -6V, \quad v_2 = 4V, \quad v_3 = -18V}$$

Chapter 2, Solution 16

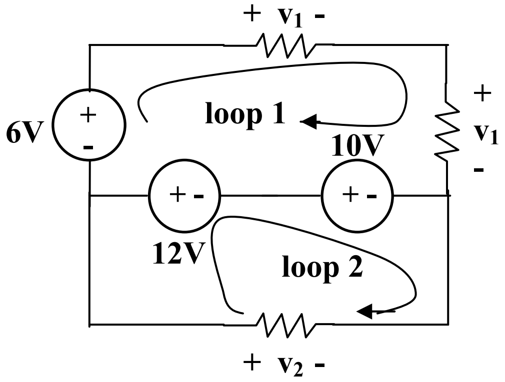

Applying KVL around loop 1,

$$-6 + v_1 + v_1 - 10 - 12 = 0 \longrightarrow v_1 = \underline{\textbf{14V}}$$

Applying KVL around loop 2,

$$12 + 10 - v_2 = 0 \longrightarrow v_2 = \underline{\textbf{22V}}$$

Chapter 2, Solution 17

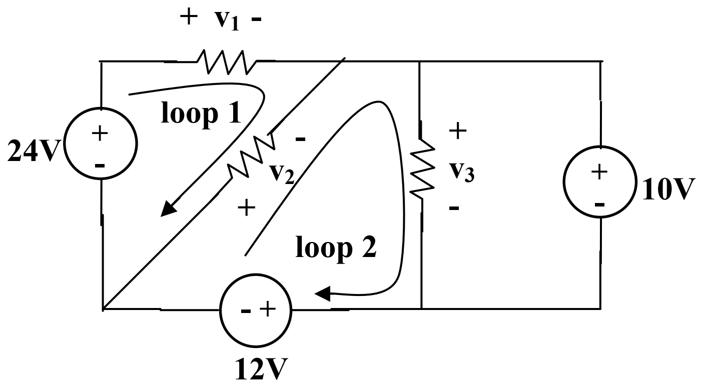

It is evident that v_3 = 10V

Applying KVL to loop 2,

$$v_2 + v_3 + 12 = 0 \longrightarrow v_2 = -22V$$

Applying KVL to loop 1,

$$-24 + v_1 - v_2 = 0 \longrightarrow v_1 = 2V$$

Thus,

v_1 = **2V**, v_2 = **-22V**, v_3 = **10V**

Chapter 2, Solution 18

Applying KVL,

$$-30 -10 +8 + I(3+5) = 0$$

$$8I = 32 \longrightarrow I = \mathbf{4A}$$

$$\mathbf{-V_{ab} + 5I + 8 = 0} \longrightarrow \mathbf{V_{ab}} = 28V$$

Chapter 2, Solution 19

Applying KVL around the loop, we obtain

$-12 + 10 - (-8) + 3i = 0 \longrightarrow$ **$\underline{i = -2A}$**

Power dissipated by the resistor:

$p_{3\Omega} = i^2R = 4(3) =$ **$\underline{12W}$**

Power supplied by the sources:

$p_{12V} = 12\,(- -2) =$ **$\underline{24W}$**

$p_{10V} = 10\,(-2) =$ **$\underline{-20W}$**

$p_{8V} = (- -2) =$ **$\underline{-16W}$**

Chapter 2, Solution 20

Applying KVL around the loop,

$-36 + 4i_0 + 5i_0 = 0 \longrightarrow$ **$\underline{i_0 = 4A}$**

Chapter 2, Solution 21

$\longrightarrow$

Apply KVL to obtain

$-45 + 10i - 3V_0 + 5i = 0$

But $v_0 = 10i$,

$-45 + 15i - 30i = 0 \longrightarrow \quad i = -3A$

$P_3 = i^2R = 9 \times 5 =$ **$\underline{45W}$**

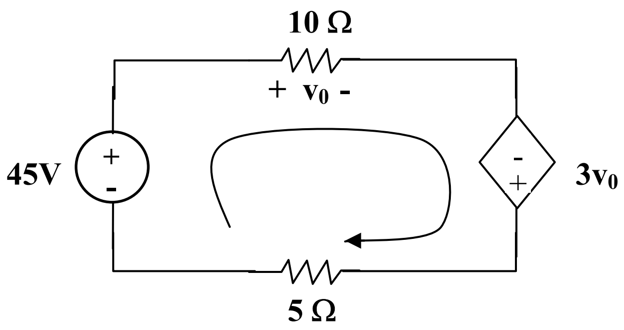

Chapter 2, Solution 22

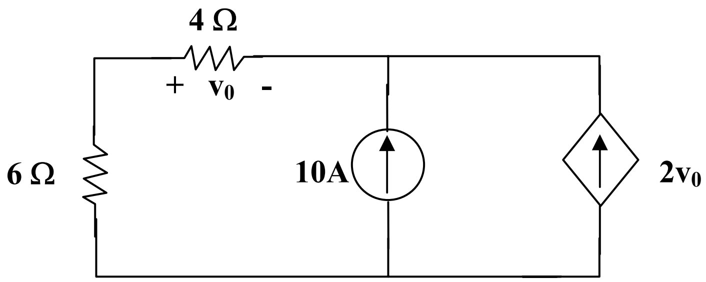

At the node, KCL requires that

$$\frac{v_0}{4} + 10 + 2v_0 = 0 \longrightarrow \quad v_0 = \underline{\mathbf{-4.444V}}$$

The current through the controlled source is

$$i = 2V_0 = -8.888\text{A}$$

and the voltage across it is

$$v = (6 + 4)\ i_0 = 10\frac{v_0}{4} = -11.111$$

Hence,

$$p_2\ v_i = (-8.888)(-11.111) = \underline{\mathbf{98.75\ W}}$$

Chapter 2, Solution 23

8//12 = 4.8, 3//6 = 2, (4 + 2)//(1.2 + 4.8) = 6//6 = 3
The circuit is reduced to that shown below.

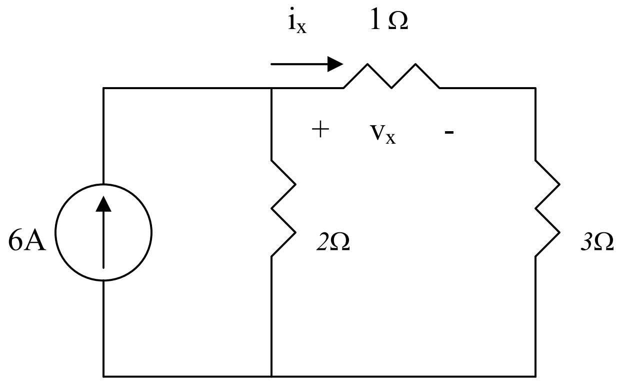

Applying current division,

$$i_x = \frac{2}{2+1+3}(6\,A) = 2\,A, \qquad v_x = 1i_x = \underline{2V}$$

The current through the 1.2-Ω resistor is $0.5i_x$ = 1A. The voltage across the 12-Ω resistor is 1 x 4.8 = 4.8 V. Hence the power is

$$p = \frac{v^2}{R} = \frac{4.8^2}{12} = \underline{1.92W}$$

Chapter 2, Solution 24

(a) $$I_0 = \frac{V_s}{R_1 + R_2}$$

$$V_0 = -\alpha I_0 \left(R_3 \| R_4\right) = -\frac{\alpha V_0}{R_1 + R_2} \cdot \frac{R_3 R_4}{R_3 + R_4}$$

$$\frac{V_0}{Vs} = \frac{-\alpha R_3 R_4}{(R_1 + R_2)(R_3 + R_4)}$$

(b) If $R_1 = R_2 = R_3 = R_4 = R$,

$$\left|\frac{V_0}{V_S}\right| = \frac{\alpha}{2R} \cdot \frac{R}{2} = \frac{\alpha}{4} = 10 \longrightarrow \alpha = \underline{\mathbf{40}}$$

Chapter 2, Solution 25

$V_0 = 5 \times 10^{-3} \times 10 \times 10^3 = 50V$

Using current division,

$$I_{20} = \frac{5}{5+20}(0.01x50) = \underline{\mathbf{0.1\ A}}$$

$V_{20} = 20 \times 0.1$ kV = **<u>2 kV</u>**

$p_{20} = I_{20} V_{20}$ = **<u>0.2 kW</u>**

Chapter 2, Solution 26

$V_0 = 5 \text{ x } 10^{-3} \text{ x } 10 \text{ x } 10^3 = 50V$

Using current division,

$I_{20} = \frac{5}{5+20}(0.01x50) =$ **0.1 A**

$V_{20} = 20 \text{ x } 0.1 \text{ kV} =$ **2 kV**

$p_{20} = I_{20} V_{20} =$ **0.2 kW**

Chapter 2, Solution 27

Using current division,

$i_1 = \frac{4}{4+6}(20) =$ **8 A**

$i_2 = \frac{6}{4+6}(20) =$ **12 A**

Chapter 2, Solution 28

We first combine the two resistors in parallel

$15 \| 10 = 6\ \Omega$

We now apply voltage division,

$v_1 = \frac{14}{14+6}(40) =$ **20 V**

$v_2 = v_3 = \frac{6}{14+6}(40) = 12 \text{ V}$

Hence, $v_1 =$ **28 V**, $v_2 =$ **12 V,** $v_s =$ **12 V**

Chapter 2, Solution 29

The series combination of 6 Ω and 3 Ω resistors is shorted. Hence

$i_2 = 0 = v_2$

$v_1 = 12,\ i_1 = \dfrac{12}{4} = 3\ \text{A}$

Hence $v_1 = \underline{\mathbf{12\ V}}$, $i_1 = \underline{\mathbf{3\ A}}$, $i_2 = \underline{\mathbf{0}} = v_2$

Chapter 2, Solution 30

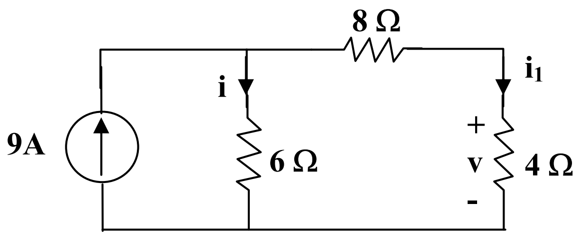

By current division, $i = \dfrac{12}{6+12}(9) = \underline{\mathbf{6\ A}}$

$i_1 = 9 - 6 = 3\text{A}, v = 4i_1 = 4 \times 3 = \underline{\mathbf{12\ V}}$

$p_6 = 1^2R = 36 \times 6 = \underline{\mathbf{216\ W}}$

Chapter 2, Solution 31

The 5 Ω resistor is in series with the combination of $10 \| (4+6) = 5\Omega$.

Hence by the voltage division principle,

$v = \dfrac{5}{5+5}(20\text{V}) = \underline{\mathbf{10\ V}}$

by ohm's law,

$i = \dfrac{v}{4+6} = \dfrac{10}{4+6} = \underline{\mathbf{1\ A}}$

$p_p = i^2R = (1)^2(4) = \underline{\mathbf{4\ W}}$

Chapter 2, Solution 32

We first combine resistors in parallel.

$$20\|30 = \frac{20x30}{50} = 12\ \Omega$$

$$10\|40 = \frac{10x40}{50} = 8\ \Omega$$

Using current division principle,

$$i_1 + i_2 = \frac{8}{8+12}(20) = 8A, i_3 + i_4 = \frac{12}{20}(20) = 12A$$

$$i_1 = \frac{20}{50}(8) = \underline{\mathbf{3.2\ A}}$$

$$i_2 = \frac{30}{50}(8) = \underline{\mathbf{4.8\ A}}$$

$$i_3 = \frac{10}{50}(12) = \underline{\mathbf{2.4A}}$$

$$i_4 = \frac{40}{50}(12) = \underline{\mathbf{9.6\ A}}$$

Chapter 2, Solution 33

Combining the conductance leads to the equivalent circuit below

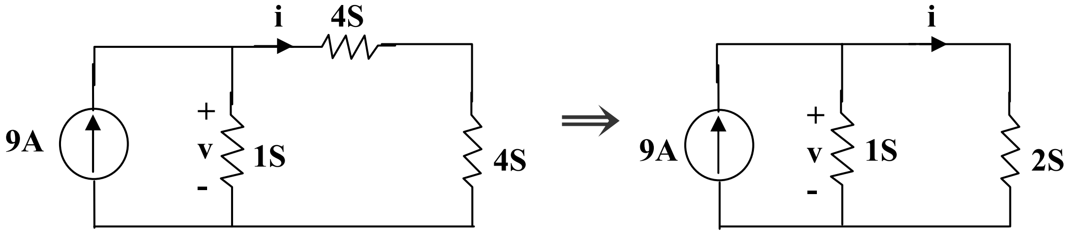

$$6S\|3S = \frac{6x3}{9} = 25 \text{ and } 25 + 25 = 4\text{ S}$$

Using current division,

$$i = \frac{1}{1+\frac{1}{2}}(9) = \underline{\mathbf{6\ A}}, v = 3(1) = \underline{\mathbf{3\ V}}$$

Chapter 2, Solution 34

By parallel and series combinations, the circuit is reduced to the one below:

$$10\|(2+13) = \frac{10x15}{25} = 6\Omega$$

$$15\|(4+6) = \frac{15x15}{25} = 6\Omega$$

$$12\|(6+6) = 6\Omega$$

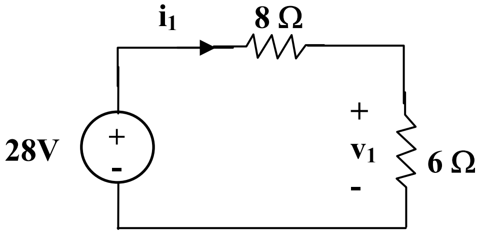

Thus $\quad i_1 = \frac{28}{8+6} = 2$ A and $v_1 = 6i_1 = 12$ V

We now work backward to get i_2 and v_2.

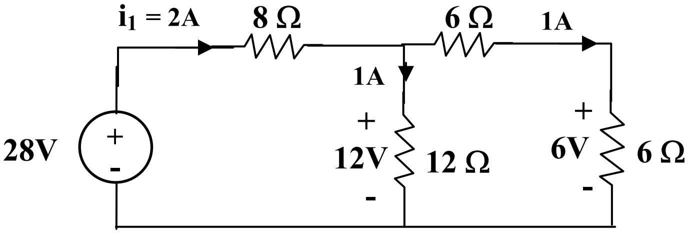

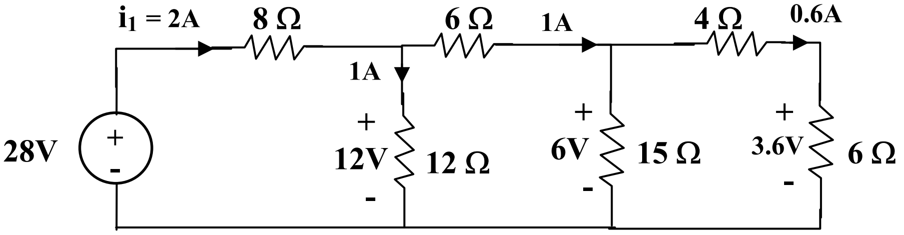

Thus, $\quad v_2 = \frac{13}{15}(3\cdot 6) = 3\cdot 12,\ i_2 = \frac{v_2}{13} = 0.24$

$$p_2 = i^2R = (0.24)^2\ (2) = 0.1152 \text{ W}$$

$i_1 =$ **<u>2 A</u>**, $i_2 =$ **<u>0.24 A</u>**, v_1 **<u>= 12 V</u>**, $v_2 =$ **<u>3.12 V</u>**, $p_2 =$ **<u>0.1152 W</u>**

Chapter 2, Solution 35

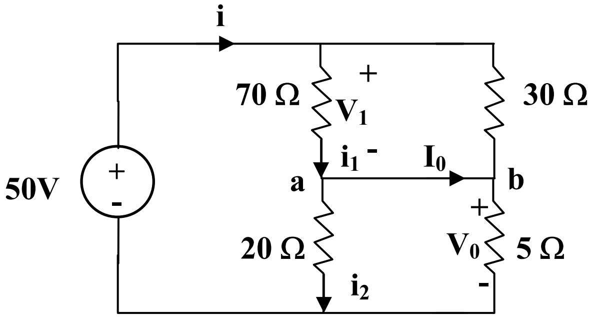

Combining the versions in parallel,

$$70\|30 = \frac{70x30}{100} = 21\Omega \ , \qquad 20\|15 = \frac{20x5}{25} = 4\ \Omega$$

$$i = \frac{50}{21+4} = 2\ A$$

$v_i = 21i = 42$ V, $v_0 = 4i = 8$ V

$$i_1 = \frac{v_1}{70} = 0.6\ A,\ i_2 = \frac{v_2}{20} = 0.4\ A$$

At node a, KCL must be satisfied

$$i_1 = i_2 + I_0 \longrightarrow 0.6 = 0.4 + I_0 \longrightarrow I_0 = 0.2\ A$$

Hence $v_0 =$ **8 V** and $I_0 =$ **0.2A**

Chapter 2, Solution 36

The 8-Ω resistor is shorted. No current flows through the 1-Ω resistor. Hence v_0 is the voltage across the 6Ω resistor.

$$I_0 = \frac{4}{2+3\|16} = \frac{4}{4} = 1\ A$$

$$v_0 = I_0\ (3\|6) = 2I_0 = \underline{\mathbf{2\ V}}$$

Chapter 2, Solution 37

Let I = current through the 16Ω resistor. If 4 V is the voltage drop across the $6\|R$ combination, then 20 - 4 = 16 V in the voltage drop across the 16Ω resistor.

Hence, $I = \frac{16}{16} = 1$ A.

But $I = \frac{20}{16 + 6\|R} \longrightarrow 1$ $\quad 4 = 6\|R = \frac{6R}{6+R} \longrightarrow$ $\quad R = \underline{\mathbf{12\ \Omega}}$

Chapter 2, Solution 38

Let I_0 = current through the 6Ω resistor. Since 6Ω and 3Ω resistors are in parallel.

$$6I_0 = 2 \text{ x } 3 \longrightarrow R_0 = 1 \text{ A}$$

The total current through the 4Ω resistor = 1 + 2 = 3 A.

Hence

$$v_S = (2 + 4 + 2\|3)\ (3\text{ A}) = \underline{\mathbf{24\ V}}$$

$$I = \frac{v_S}{10} = \underline{\mathbf{2.4\ A}}$$

Chapter 2, Solution 39

(a) $R_{eq} = R\|0 = \underline{\mathbf{0}}$

(b) $R_{eq} = R\|R + R\|R = \frac{R}{2} + \frac{R}{2} = \underline{\mathbf{R}}$

(c) $R_{eq} = (R + R)\|(R + R) = 2R\|2R = \underline{\mathbf{R}}$

(d) $R_{eq} = 3R\|(R + R\|R) = 3R\|(R + \frac{1}{2}R)$

$$= \frac{3R\text{x}\frac{3}{2}R}{3R + \frac{3}{2}R} = \underline{\mathbf{R}}$$

(e) $R_{eq} = R\|2R\|3R = 3R\| \left(\frac{R \cdot 2R}{3R}\right)$

$$= 3R\| \frac{2}{3}R = \frac{3R\text{x}\frac{2}{3}R}{3R + \frac{2}{3}R} = \underline{\frac{6}{11}R}$$

Chapter 2, Solution 40

$$\text{Req} = 3 + 4\|(2 + 6\|3) = 3 + 2 = \underline{\mathbf{5\Omega}}$$

$$I = \frac{10}{\text{Req}} = \frac{10}{5} = \underline{\mathbf{2\ A}}$$

Chapter 2, Solution 41

Let R_0 = combination of three 12Ω resistors in parallel

$$\frac{1}{R_o} = \frac{1}{12} + \frac{1}{12} + \frac{1}{12} \longrightarrow R_o = 4$$

$$R_{eq} = 30 + 60\|(10 + R_0 + R) = 30 + 60\|(14 + R)$$

$$50 = 30 + \frac{60(14 + R)}{74 + R} \longrightarrow 74 + R = 42 + 3R$$

or R = $\underline{\mathbf{16\ \Omega}}$

Chapter 2, Solution 42

(a) $R_{ab} = 5\|(8 + 20\|30) = 5\|(8 + 12) = \frac{5x20}{25} = \underline{\mathbf{4\ \Omega}}$

(b) $R_{ab} = 2 + 4\|(5 + 3)\|8 + 5\|10\|(6 + 4) = 2 + 4\|4 + 5\|5 = 2 + 2 + 2.5 = \underline{\mathbf{6.5\ \Omega}}$

Chapter 2, Solution 43

(a) $R_{ab} = 5\|20 + 10\|40 = \frac{5x20}{25} + \frac{400}{50} = 4 + 8 = \underline{\mathbf{12\ \Omega}}$

(b) $60\|20\|30 = \left(\frac{1}{60} + \frac{1}{20} + \frac{1}{30}\right)^{-1} = \frac{60}{6} = 10\Omega$

$$R_{ab} = 80\|(10 + 10) = \frac{80 + 20}{100} = \underline{\mathbf{16\ \Omega}}$$

Chapter 2, Solution 44

(a) Convert T to Y and obtain

$$R_1 = \frac{20x20 + 20x10 + 10x20}{10} = \frac{800}{10} = 80\Omega$$

$$R_2 = \frac{800}{20} = 40\Omega = R_3$$

The circuit becomes that shown below.

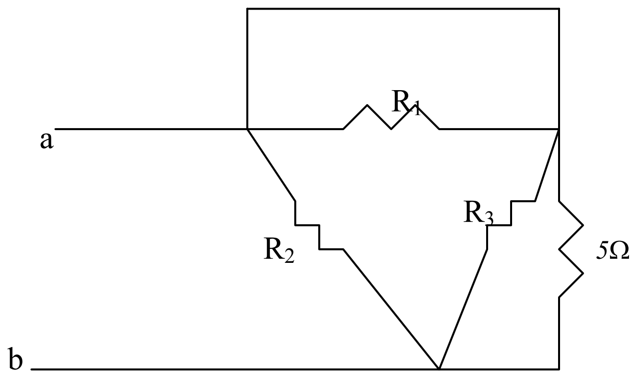

$R_1//0 = 0$, $R_3//5 = 40//5 = 4.444\,\Omega$

$$R_{ab} = R_2 //(0 + 4.444) = 40 //4.444 = \underline{4\Omega}$$

(b) $30//(20+50) = 30//70 = 21\ \Omega$

Convert the T to Y and obtain

$$R_1 = \frac{20x10 + 10x40 + 40x20}{40} = \frac{1400}{40} = 35\Omega$$

$$R_2 = \frac{1400}{20} = 70\Omega\,, \quad R_3 = \frac{1400}{10} = 140\Omega$$

The circuit is reduce 15Ω t shown below.

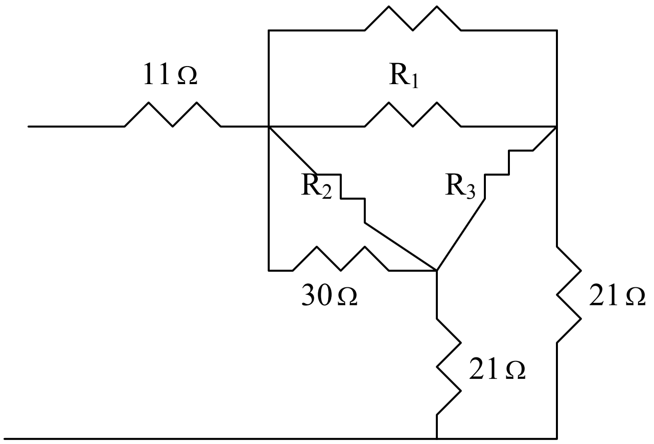

Combining the resistors in parallel

R_1//15 =35//15=10.5, 30//R_2=30//70 = 21
leads to the circuit below.

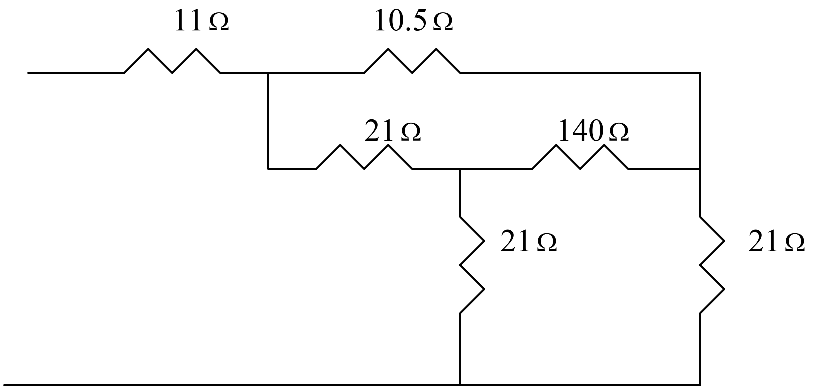

Coverting the T to Y leads to the circuit below.

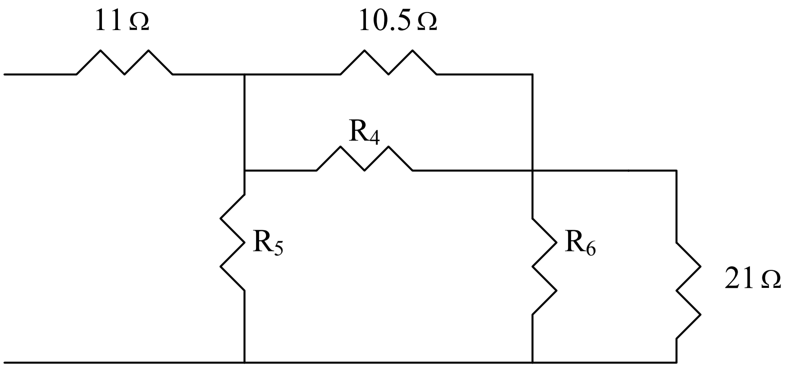

$$R_4 = \frac{21x140 + 140x21 + 21x21}{21} = \frac{6321}{21} = 301\Omega = R_6$$

$$R_5 = \frac{6321}{140} = 45.15$$

10.5//301 = 10.15, 301//21 = 19.63
R_5//(10.15 +19.63) = 45.15//29.78 = 17.94
$R_{ab} = 11 + 17.94 = \underline{28.94\Omega}$

Chapter 2, Solution 45

(a) 10//40 = 8, 20//30 = 12, 8//12 = 4.8

$$R_{ab} = 5 + 50 + 4.8 = \underline{59.8\Omega}$$

(b) 12 and 60 ohm resistors are in parallel. Hence, 12//60 = 10 ohm. This 10 ohm and 20 ohm are in series to give 30 ohm. This is in parallel with 30 ohm to give 30//30 = 15 ohm. And 25//(15+10) = 12.5. Thus
$R_{ab} = 5 + 12.8 + 15 = \underline{32.5\Omega}$

Chapter 2, Solution 46

(a) $R_{ab} = 30\|70 + 40 + 60\|20 = \frac{30x70}{100} + 40 + \frac{60+20}{80}$

$= 21 + 40 + 15 = \underline{\mathbf{76\ \Omega}}$

(b) The 10-Ω, 50-Ω, 70-Ω, and 80-Ω resistors are shorted.

$20\|30 = \frac{20x30}{50} = 12\Omega$

$40\|60 = \frac{40x60}{100} = 24$

$R_{ab} = 8 + 12 + 24 + 6 + 0 + 4 = \underline{\mathbf{54\ \Omega}}$

Chapter 2, Solution 47

$5\|20 = \frac{5x20}{25} = 4\Omega$

$6\|3 = \frac{6x3}{9} = 2\Omega$

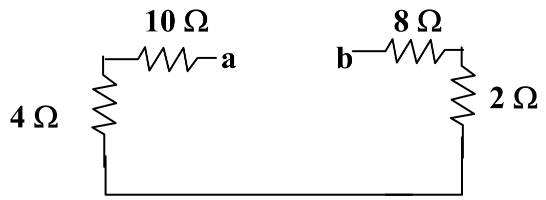

$R_{ab} = 10 + 4 + 2 + 8 = \underline{\mathbf{24\ \Omega}}$

Chapter 2, Solution 48

(a) $R_a = \dfrac{R_1R_2 + R_2R_3 + R_3R_1}{R_3} = \dfrac{100+100+100}{10} = 30$

$R_a = R_b = R_c = \underline{\mathbf{30\ \Omega}}$

(b) $R_a = \dfrac{30x20 + 30x50 + 20x50}{30} = \dfrac{3100}{30} = 103.3\Omega$

$R_b = \dfrac{3100}{20} = 155\Omega, \quad R_c = \dfrac{3100}{50} = 62\Omega$

$R_a = \underline{\mathbf{103.3\ \Omega}}$, $R_b = \underline{\mathbf{155\ \Omega}}$, $R_c = \underline{\mathbf{62\ \Omega}}$

Chapter 2, Solution 49

(a) $R_1 = \dfrac{R_aR_c}{R_a + R_b + R_c} = \dfrac{12+12}{36} = 4\Omega$

$R_1 = R_2 = R_3 = \underline{\mathbf{4\ \Omega}}$

(b) $R_1 = \dfrac{60x30}{60+30+10} = 18\Omega$

$R_2 = \dfrac{60x10}{100} = 6\Omega$

$R_3 = \dfrac{30x10}{100} = 3\Omega$

$\mathbf{R_1 = \underline{18\Omega}, R_2 = \underline{6\Omega}, R_3 = \underline{3\Omega}}$

Chapter 2, Solution 50

Using $R_\Delta = 3R_Y = 3R$, we obtain the equivalent circuit shown below:

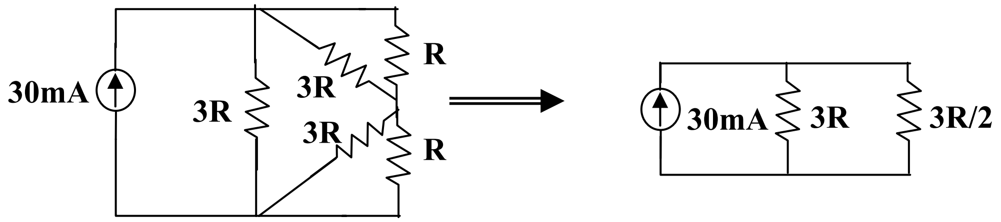

$$3R \| R = \frac{3RxR}{4R} = \frac{3}{4}R$$

$$3R \| (3RxR)/(4R) = 3/(4R)$$

$$3R \left\| \left(\frac{3}{4}R + \frac{3}{4}R \right) = 3R \right\| \frac{3}{2}R = \frac{3Rx\frac{3}{2}R}{3R + \frac{3}{2}R = R}$$

$P = I^2R \longrightarrow 800 \text{ x } 10^{-3} = (30 \text{ x } 10^{-3})^2 R$

R = **<u>889 Ω</u>**

Chapter 2, Solution 51

(a) $30 \| 30 = 15\Omega$ and $30 \| 20 = 30x20/(50) = 12\Omega$

$R_{ab} = 15 \| (12 + 12) = 15x24/(39) =$ **<u>9.31 Ω</u>**

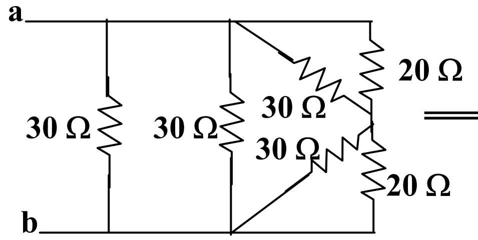

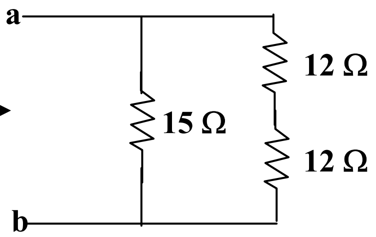

(b) Converting the T-subnetwork into its equivalent Δ network gives

$R_{a'b'}$ = 10x20 + 20x5 + 5x10/(5) = 350/(5) = 70 Ω
$R_{b'c'}$ = 350/(10) = 35Ω, Ra'c' = 350/(20) = 17.5 Ω

Also $30 \| 70 = 30x70/(100) = 21\Omega$ and 35/(15) = 35x15/(50) = 10.5

$R_{ab} = 25 + 17.5 \| (21 + 10.5) = 25 + 17.5 \| 31.5$

R_{ab} = **<u>36.25 Ω</u>**

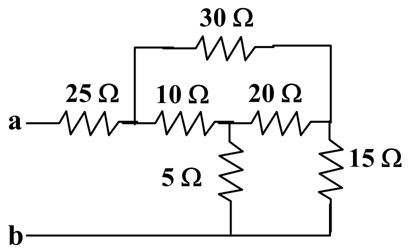

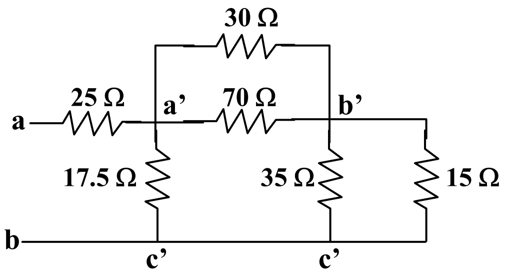

Chapter 2, Solution 52

(a) We first convert from T to Δ.

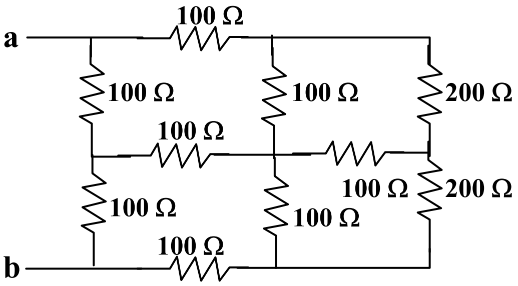

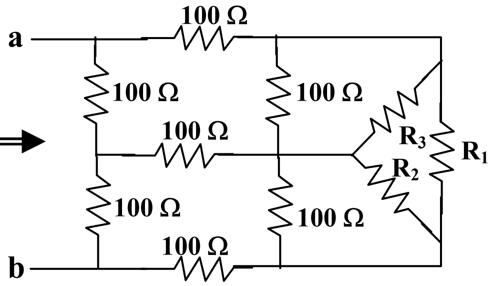

$$R_1 = \frac{100x200 + 200x200 + 200x100}{100} = \frac{80000}{100} = 800\Omega$$

$R_2 = R_3 = 80000/(200) = 400$

But $\quad 100 \| 400 = \dfrac{100x400}{500} = 80\Omega$

We connect the Δ to Y.

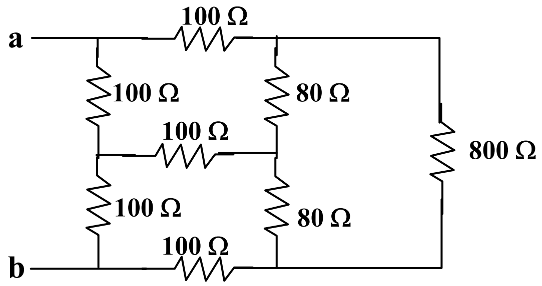

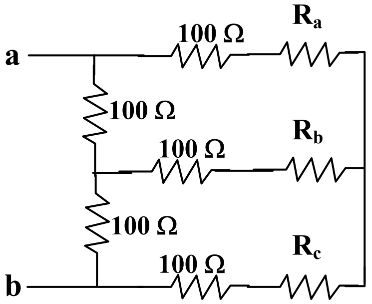

$$R_a = R_c = \frac{80x800}{80 + 80 + 800} = \frac{64,000}{960} = \frac{400}{3}\Omega$$

$$R_b = \frac{80x80}{960} = \frac{20}{3}\Omega$$

We convert T to Δ.

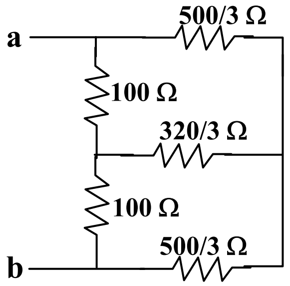

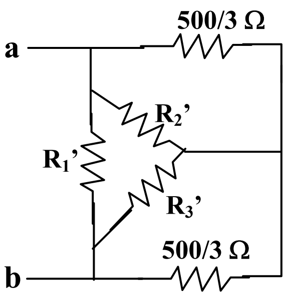

$$R_1' = \frac{100x100 + 100x\frac{320}{3} + 100x\frac{320}{3}}{\frac{320}{3}} = \frac{94,000/(3)}{320/(3)} = 293.75\Omega$$

$$R_2' = R_3^1 = \frac{94,000/(3)}{100} = 313.33$$

$$940/(30)\|500/(3) = \frac{940/(3)x500/(3)}{1440/(3)} = 108.796$$

$$R_{ab} = 293.75\|(2x108.796) = \frac{293.75x217.6}{511.36} = \underline{\mathbf{125\ \Omega}}$$

(b) Converting the T_s to Δ_s, we have the equivalent circuit below.

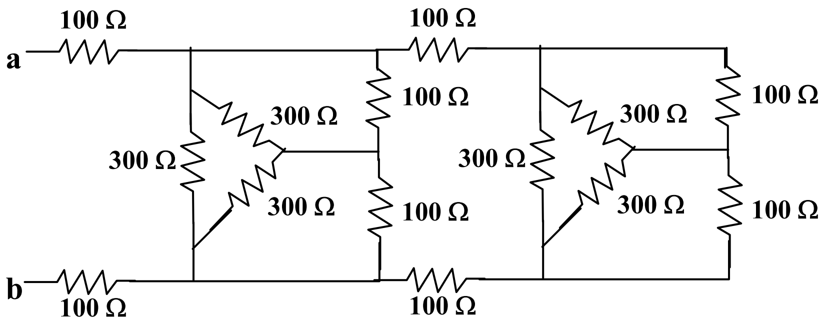

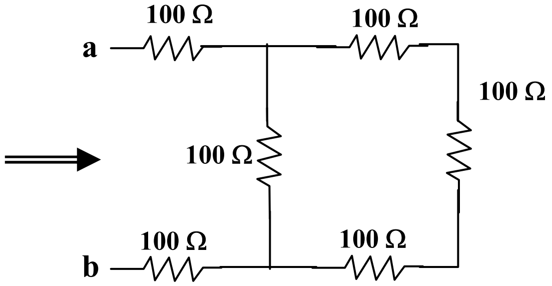

$$300\|100 = 300x100/(400) = 75, \quad 300\|(75+75) = 300x150/(450) = 100$$

$$R_{ab} = 100 + 100\|300 + 100 = 200 + 100x300/(400)$$

$\underline{\mathbf{R_{ab} = 2.75\ \Omega}}$

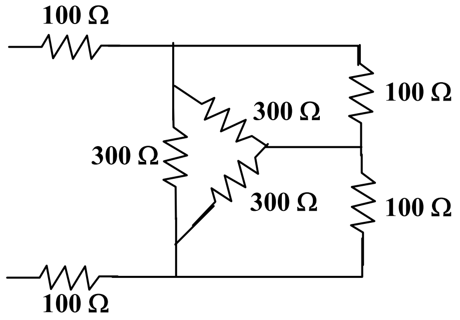

Chapter 2, Solution 53

(a) Converting one Δ to T yields the equivalent circuit below:

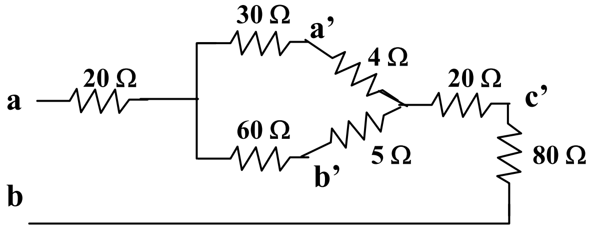

$$R_{a'n} = \frac{40x10}{40+10+50} = 4\Omega,\ R_{b'n} = \frac{10x50}{100} = 5\Omega,\ R_{c'n} = \frac{40x50}{100} = 20\Omega$$

$R_{ab} = 20 + 80 + 20 + (30+4)\|(60+5) = 120 + 34\|65$

$R_{ab} =$ **142.32 Ω**

(a) We combine the resistor in series and in parallel.

$$30\|(30+30) = \frac{30x60}{90} = 20\Omega$$

We convert the balanced Δs to Ts as shown below:

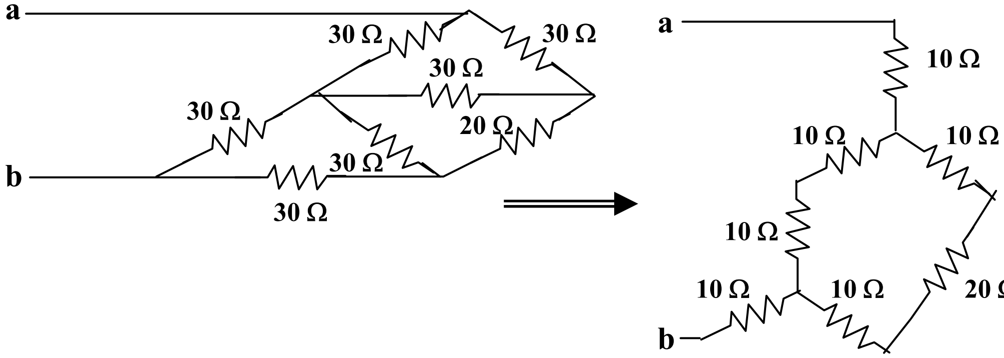

$R_{ab} = 10 + (10+10)\|(10+20+10) + 10 = 20 + 20\|40$

R_{ab} = 33.33 Ω

Chapter 2, Solution 54

(a) $R_{ab} = 50 + 100//(150+100+150) = 50 + 100//400 = \underline{130\Omega}$

(b) $R_{ab} = 60 + 100//(150+100+150) = 60 + 100//400 = \underline{140\Omega}$

Chapter 2, Solution 55

We convert the T to Δ.

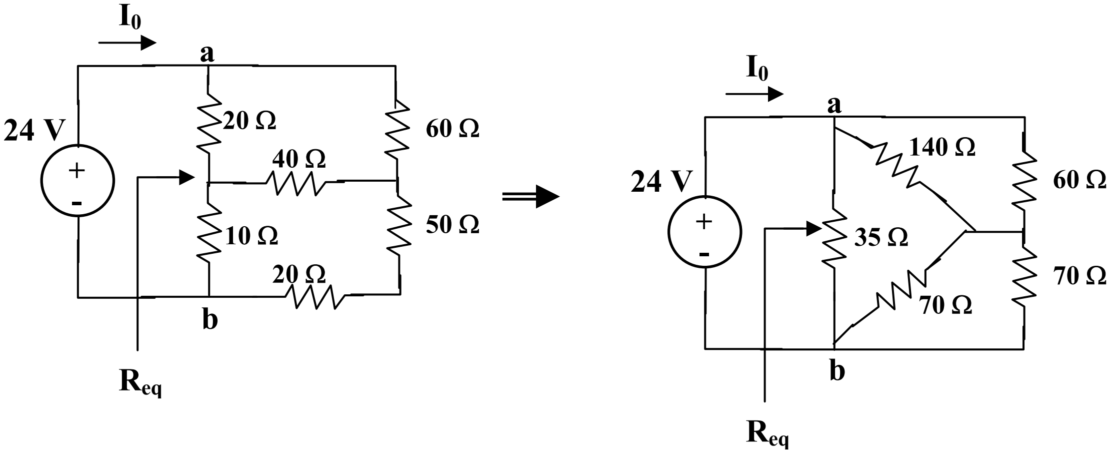

$$R_{ab} = \frac{R_1R_2 + R_2R_3 + R_3R_1}{R_3} = \frac{20x40 + 40x10 + 10x20}{40} = \frac{1400}{40} = 35\Omega$$

R_{ac} = 1400/(10) = 140Ω, R_{bc} = 1400/(40) = 35Ω

$70\|70 = 35$ and $140\|160 = $ 140x60/(200) = 42

$R_{eq} = 35\|(35+42) = 24.0625\Omega$

I_0 = 24/(R_{ab}) = **<u>0.9774A</u>**

Chapter 2, Solution 56

We need to find R_{eq} and apply voltage division. We first tranform the Y network to Δ.

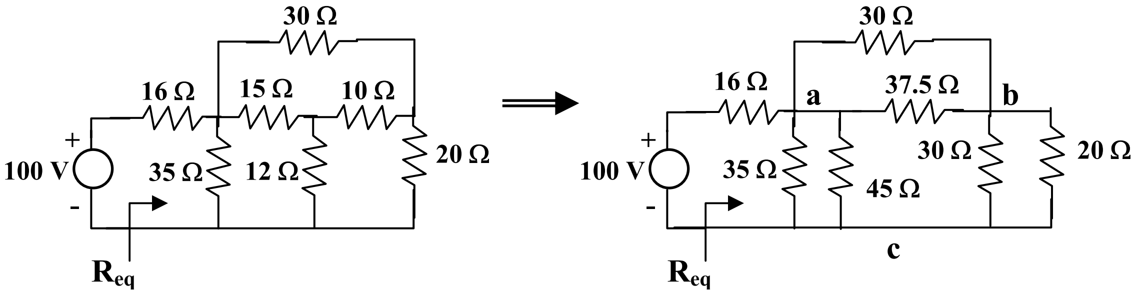

$$R_{ab} = \frac{15x10 + 10x12 + 12x15}{12} = \frac{450}{12} = 37.5\Omega$$

R_{ac} = 450/(10) = 45Ω, R_{bc} = 450/(15) = 30Ω

Combining the resistors in parallel,

$$30||20 = (600/50) = 12\ \Omega,$$

$$37.5||30 = (37.5x30/67.5) = 16.667\ \Omega$$

$$35||45 = (35x45/80) = 19.688\ \Omega$$

$$R_{eq} = 19.688||(12 + 16.667) = 11.672\Omega$$

By voltage division,

$$v = \frac{11.672}{11.672+16}100 = \underline{\mathbf{42.18\ V}}$$

Chapter 2, Solution 57

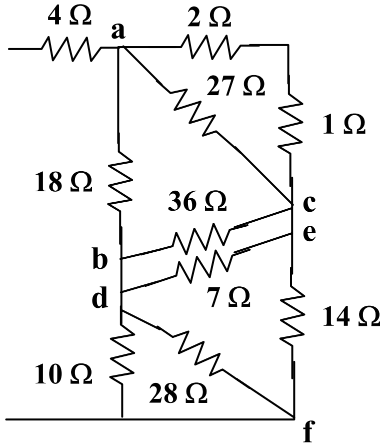

$$R_{ab} = \frac{6x12+12x8+8x6}{12} = \frac{216}{12} = 18\ \Omega$$

$R_{ac} = 216/(8) = 27\Omega$, $R_{bc} = 36\ \Omega$

$$R_{de} = \frac{4x2+2x8+8x4}{8} = \frac{56}{8} 7\ \Omega$$

$R_{ef} = 56/(4) = 14\Omega$, $R_{df} = 56/(2) = 28\ \Omega$

Combining resistors in parallel,

$$10\|28 = \frac{280}{38} = 7.368\Omega,\ \ 36\|7 = \frac{36x7}{43} = 5.868\Omega$$

$$27\|3 = \frac{27x3}{30} = 2.7\Omega$$

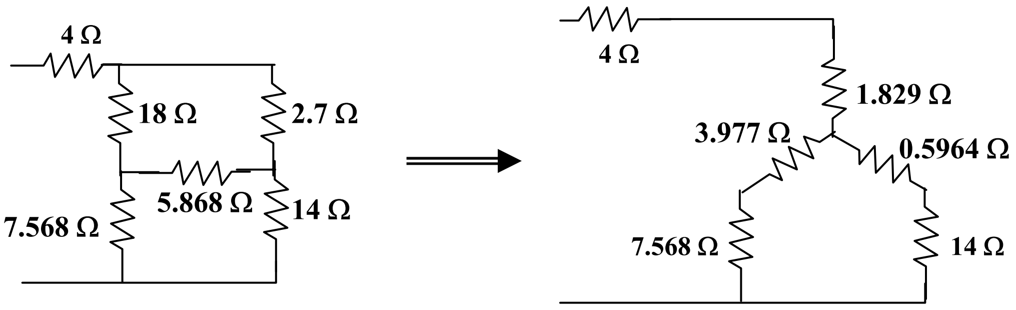

$$R_{an} = \frac{18x2.7}{18+2.7+5.867} = \frac{18x2.7}{26.567} = 1.829\ \Omega$$

$$R_{bn} = \frac{18x5.868}{26.567} = 3.977\ \Omega$$

$$R_{cn} = \frac{5.868x2.7}{26.567} = 0.5904\ \Omega$$

$$R_{eq} = 4 + 1.829 + (3.977 + 7.368)\|(0.5964 + 14)$$

$$= 5.829 + 11.346\|14.5964 = \underline{\mathbf{12.21\ \Omega}}$$

$i = 20/(R_{eq})$ = **<u>1.64 A</u>**

Chapter 2, Solution 58

The resistor of the bulb is 120/(0.75) = 160Ω

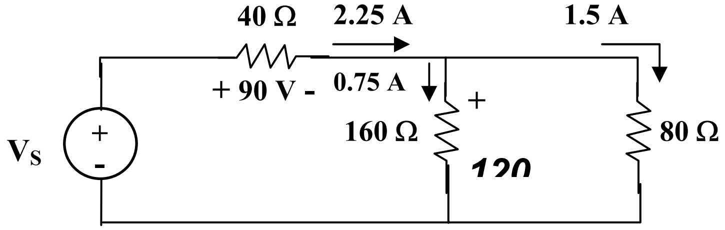

Once the 160Ω and 80Ω resistors are in parallel, they have the same voltage 120V. Hence the current through the 40Ω resistor is

40(0.75 + 1.5) = 2.25 x 40 = 90

Thus

v_s = 90 + 120 = **<u>210 V</u>**

Chapter 2, Solution 59

Total power p = 30 + 40 + 50 + 120 W = vi

or i = p/(v) = 120/(100) = **1.2 A**

Chapter 2, Solution 60

p = iv $\qquad$ i = p/(v)

i_{30W} = 30/(100) = **0.3 A**

i_{40W} = 40/(100) = **0.4 A**

i_{50W} = 50/(100) = **0.5 A**

Chapter 2, Solution 61

There are three possibilities

(a) Use R_1 and R_2:

$R = R_1 \| R_2 = 80 \| 90 = 42.35\Omega$

$p = i^2R$

i = 1.2A + 5% = 1.2 ± 0.06 = 1.26, 1.14A

p = 67.23W or 55.04W, cost = $1.50

(b) Use R_1 and R_3:

$R = R_1 \| R_3 = 80 \| 100 = 44.44\ \Omega$

$p = I^2R$ = 70.52W or 57.76W, cost = $1.35

(c) Use R_2 and R_3:

$R = R_2 \| R_3 = 90 \| 100 = 47.37\Omega$

$p = I^2R$ = 75.2W or 61.56W, cost = $1.65

Note that cases (b) and (c) give p that exceed 70W that can be supplied. Hence case (a) is the right choice, i.e.

R_1 and R_2

Chapter 2, Solution 62

p_A = 110x8 = 880 W, $\qquad$ p_B = 110x2 = 220 W

Energy cost = $0.06 x 360 x10 x (880 + 220)/1000 = $237.60

Chapter 2, Solution 63

Use eq. (2.61),

$$R_n = \frac{I_m}{I - I_m} R_m = \frac{2x10^{-3} x100}{5 - 2x10^{-3}} = 0.04\Omega$$

$I_n = I - I_m = 4.998$ A

$p = I_n^2 R = (4.998)^2 (0.04) = 0.9992 \cong$ **1 W**

Chapter 2, Solution 64

When $R_x = 0$, $i_x = 10A$ $\quad R = \frac{110}{10} = 11\ \Omega$

When R_x is maximum, $i_x = 1A$ ⟶ $R + R_x = \frac{110}{1} = 110\ \Omega$

i.e., $R_x = 110 - R = 99\ \Omega$

Thus, R = **11 Ω**, R_x = **99 Ω**

Chapter 2, Solution 65

$$R_n = \frac{V_{fs}}{I_{fs}} - R_m = \frac{50}{10mA} - 1\ k\Omega = \mathbf{4\ k\Omega}$$

Chapter 2, Solution 66

$$20\ k\Omega/V = \text{sensitivity} = \frac{1}{I_{fs}}$$

i.e., $I_{fs} = \frac{1}{20} k\Omega / V = 50\ \mu A$

The intended resistance $R_m = \frac{V_{fs}}{I_{fs}} = 10(20k\Omega / V) = 200k\Omega$

(a) $R_n = \frac{V_{fs}}{i_{fs}} - R_m = \frac{50\ V}{50\mu A} - 200\ k\Omega =$ **800 kΩ**

(b) $p = I_{fs}^2 R_n = (50\ \mu A)^2 (800\ k\Omega) =$ **2 mW**

Chapter 2, Solution 67

(a) By current division,

$i_0 = 5/(5 + 5)$ (2 mA) = 1 mA
$V_0 = (4\ k\Omega)\ i_0 = 4 \times 10^3 \times 10^{-3} =$ **4 V**

(b) $4k\|6k = 2.4k\Omega$. By current division,

$$i_0' = \frac{5}{1+2.4+5}(2mA) = 1.19\ mA$$

$$v_0' = (2.4\ k\Omega)(1.19\ mA) = \underline{\mathbf{2.857\ V}}$$

(c) $$\%\ error = \left|\frac{v_0 - v_0'}{v_0}\right| \times 100\% = \frac{1.143}{4} x100 = \underline{\mathbf{28.57\%}}$$

(d) $4k\|30\ k\Omega = 3.6\ k\Omega$. By current division,

$$i_0' = \frac{5}{1+3.6+5}(2mA) = 1.042mA$$

$$v_0'(3.6k\Omega)(1.042\,mA) = 3.75V$$

$$\%\ error = \left|\frac{v - v_0'}{v_0}\right| x100\% = \frac{0.25x100}{4} = \underline{\mathbf{6.25\%}}$$

Chapter 2, Solution 68

(a) $40 = 24\|60\Omega$

$$i = \frac{4}{16+24} = \underline{\mathbf{0.1\ A}}$$

(b) $$i' = \frac{4}{16+1+24} = \underline{\mathbf{0.09756\ A}}$$

(c) $$\%\ error = \frac{0.1 - 0.09756}{0.1} x100\% = \underline{\mathbf{2.44\%}}$$

Chapter 2, Solution 69

With the voltmeter in place,

$$V_0 = \frac{R_2 \| R_m}{R_1 + R_S + R_2 \| R_m} V_S$$

where R_m = 100 kΩ without the voltmeter,

$$V_0 = \frac{R_2}{R_1 + R_2 + R_S} V_S$$

(a) When R_2 = 1 kΩ, $R_m \| R_2 = \frac{100}{101}$ kΩ

$$V_0 = \frac{\frac{100}{101}}{\frac{100}{101+30}}(40) = \underline{\textbf{1.278 V (with)}}$$

$$V_0 = \frac{1}{1+30}(40) = \underline{\textbf{1.29 V (without)}}$$

(b) When R_2 = 10 kΩ, $R_2 \| R_m = \frac{1000}{110} = 9.091\text{k}\Omega$

$$V_0 = \frac{9.091}{9.091+30}(40) = \underline{\textbf{9.30 V (with)}}$$

$$V_0 = \frac{10}{10+30}(40) = \underline{\textbf{10 V (without)}}$$

(c) When R_2 = 100 kΩ, $R_2 \| R_m = 50\text{k}\Omega$

$$V_0 = \frac{50}{50+30}(40) = \underline{\textbf{25 V (with)}}$$

$$V_0 = \frac{100}{100+30}(40) = \underline{\textbf{30.77 V (without)}}$$

Chapter 2, Solution 70

(a) Using voltage division,

$$v_a = \frac{12}{12+8}(25) = \underline{15V}$$

$$v_b = \frac{10}{10+15}(25) = \underline{10V}$$

$$v_{ab} = v_a - v_b = 15 - 10 = \underline{5V}$$

(b)

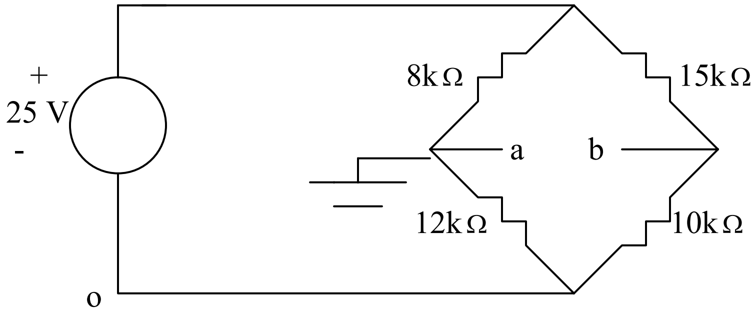

$v_a = 0, \quad v_b = \underline{10V}, \quad v_{ab} = v_a - v_b = 0 - 10 = \underline{-10V}$

Chapter 2, Solution 71

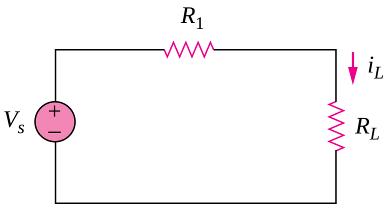

Given that $v_s = 30$ **V**, $R_1 = 20\ \Omega$, $I_L = 1$ **A**, find R_L.

$$v_s = i_L(R_1 + R_L) \longrightarrow R_L = \frac{v_s}{i_L} - R_1 = \frac{30}{1} - 20 = \underline{10\Omega}$$

Chapter 2, Solution 72

The system can be modeled as shown.

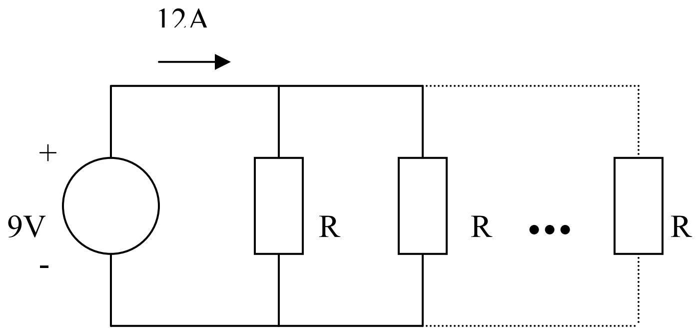

The n parallel resistors R give a combined resistance of R/n. Thus,

$$9 = 12x\frac{R}{n} \longrightarrow n = \frac{12xR}{9} = \frac{12x15}{9} = \underline{20}$$

Chapter 2, Solution 73

By the current division principle, the current through the ammeter will be one-half its previous value when

$R = 20 + R_x$
$65 = 20 + R_x \longrightarrow R_x = \underline{\mathbf{45\ \Omega}}$

Chapter 2, Solution 74

With the switch in high position,

$6 = (0.01 + R_3 + 0.02) \text{ x } 5 \longrightarrow R_3 = \underline{\mathbf{1.17\ \Omega}}$

At the medium position,

$6 = (0.01 + R_2 + R_3 + 0.02) \text{ x } 3 \longrightarrow R_2 + R_3 = 1.97$

or $R_2 = 1.97 - 1.17 = \underline{\mathbf{0.8\ \Omega}}$

At the low position,

$6 = (0.01 + R_1 + R_2 + R_3 + 0.02) \text{ x } 1 \longrightarrow R_1 + R_2 + R_3 = 5.97$
$R_1 = 5.97 - 1.97 = \underline{\mathbf{4\ \Omega}}$

Chapter 2, Solution 75

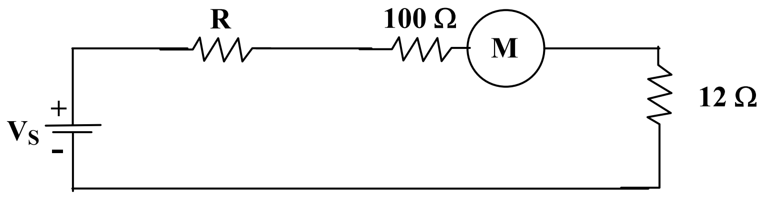

(a) When $R_x = 0$, then

$$I_m = I_{fs} = \frac{t}{R + R_m} \longrightarrow R_2 = \frac{E^2}{I_{fs}} - R_m = \frac{2}{0.1x10^3} - 100 = 19.9k\Omega$$

(b) For half-scale deflection, $I_m = \frac{I_{fs}}{2} = 0.05mA$

$$I_m = \frac{E}{R + R_m + R_x} \longrightarrow R_x = \frac{E}{I_m} - (R + R_m) = \frac{2}{0.05x10^{-3}} - 20k\Omega = \underline{\mathbf{20\ k\Omega}}$$

Chapter 2, Solution 76

For series connection, R = 2 x 0.4Ω = 0.8Ω

$$p = \frac{V^2}{R} = \frac{(120)^2}{0.8} = \underline{\mathbf{18\ k\Omega}}\quad \mathbf{(low)}$$

For parallel connection, R = 1/2 x 0.4Ω = 0.2Ω

$$p = \frac{V^2}{R} = \frac{(120)^2}{0.2} = \underline{\mathbf{72\ kW}}\quad \mathbf{(high)}$$

Chapter 2, Solution 77

(a) $5\ \Omega = 10\|10 = 20\|20\|20\|20$

i.e., **<u>four 20 Ω resistors in parallel</u>.**

(b) $311.8 = 300 + 10 + 1.8 = 300 + 20\|20 + 1.8$

i.e., one 300Ω resistor in series with 1.8Ω resistor and
<u>a parallel combination of two 20Ω resistors</u>.

(c) $40k\Omega = 12k\Omega + 28k\Omega = 24\|24k + 56k\|50k$

i.e., Two 24kΩ resistors in parallel **<u>connected in series with two 50kΩ resistors in parallel</u>.**

(d) $42.32k\Omega = 421 + 320$

$= 24k + 28k = 320$

$= 24k = 56k\|56k + 300 + 20$

i.e., A series combination of 20Ω resistor, 300Ω resistor, 24kΩ resistor and a parallel combination of two **<u>56kΩ resistors</u>.**

Chapter 2, Solution 78

The equivalent circuit is shown below:

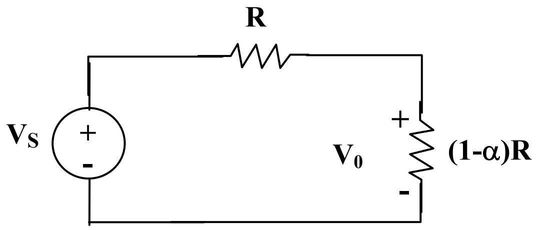

$$V_0 = \frac{(1-\alpha)R}{R+(1-\alpha)R} V_S = (1-\alpha)R_0 V_S$$

$$\underline{\frac{V_0}{V_S} = (1-\alpha)R}$$

Chapter 2, Solution 79

Since $p = v^2/R$, the resistance of the sharpener is
$R = v^2/(p) = 6^2/(240 \text{ x } 10^{-3}) = 150\Omega$
$I = p/(v) = 240 \text{ mW}/(6V) = 40 \text{ mA}$

Since R and R_x are in series, I flows through both.

$IR_x = V_x = 9 - 6 = 3$ V
$R_x = 3/(I) = 3/(40 \text{ mA}) = 3000/(40) =$ **<u>75 Ω</u>**

Chapter 2, Solution 80

The amplifier can be modeled as a voltage source and the loudspeaker as a resistor:

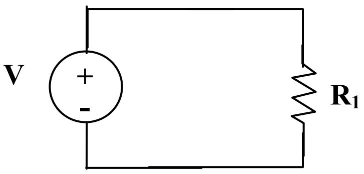

Case 1

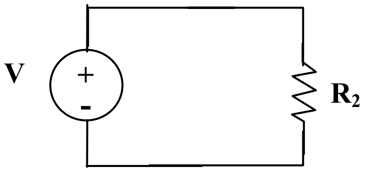

Case 2

Hence $p = \frac{V^2}{R}, \quad \frac{p_2}{p_1} = \frac{R_1}{R_2} \longrightarrow p_2 = \frac{R_1}{R_2} p_1 = \frac{10}{4}(12) =$ **<u>30 W</u>**

Chapter 2, Solution 81

Let R_1 and R_2 be in kΩ.

$$R_{eq} = R_1 + R_2 \| 5 \qquad (1)$$

$$\frac{V_0}{V_S} = \frac{5 \| R_2}{5 \| R_2 + R_1} \qquad (2)$$

From (1) and (2), $0.05 = \frac{5 \| R_1}{40} \longrightarrow \quad 2 = 5 \| R_2 = \frac{5R_2}{5 + R_2}$ or $R_2 = 3.33$ kΩ

From (1), $40 = R_1 + 2 \longrightarrow \quad R_1 = 38$ kΩ

Thus **$R_1 = 38$ kΩ, $R_2 = 3.33$ kΩ**

Chapter 2, Solution 82

(a)

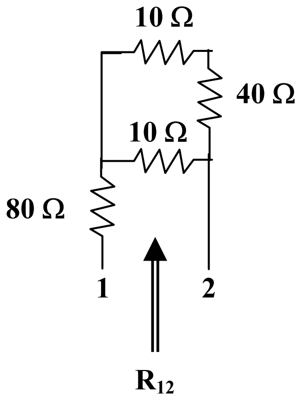

$$R_{12} = 80 + 10 \| (10 + 40) = 80 + \frac{50}{6} = \underline{\mathbf{88.33\ \Omega}}$$

(b)

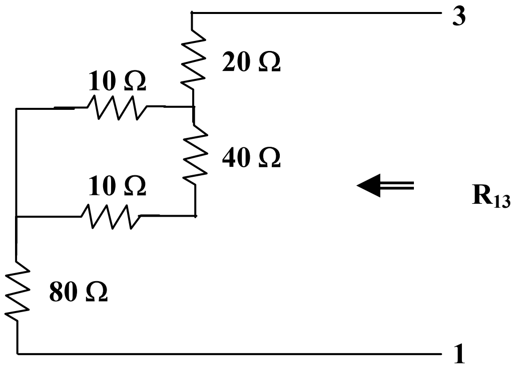

$$R_{13} = 80 + 10 \| (10 + 40) + 20 = 100 + 10 \| 50 = \underline{\mathbf{108.33\ \Omega}}$$

(c)

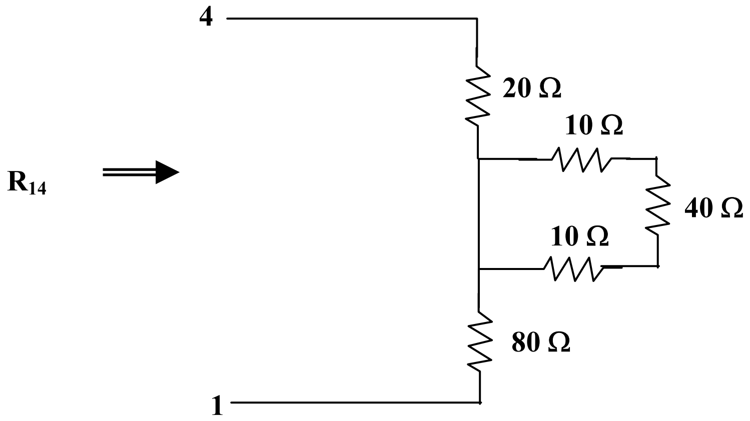

$R_{14} = 80 + 0\|(10 + 40 + 10) + 20 = 80 + 0 + 20 = \underline{\mathbf{100\ \Omega}}$

Chapter 2, Solution 83

The voltage across the tube is 2 x 60 mV = 0.06 V, which is negligible compared with 24 V. Ignoring this voltage amp, we can calculate the current through the devices.

$$I_1 = \frac{p_1}{V_1} = \frac{45\text{mW}}{9\text{V}} = 5\text{mA}$$

$$I_2 = \frac{p_2}{V_2} = \frac{480\text{mW}}{24} = 20\text{mA}$$

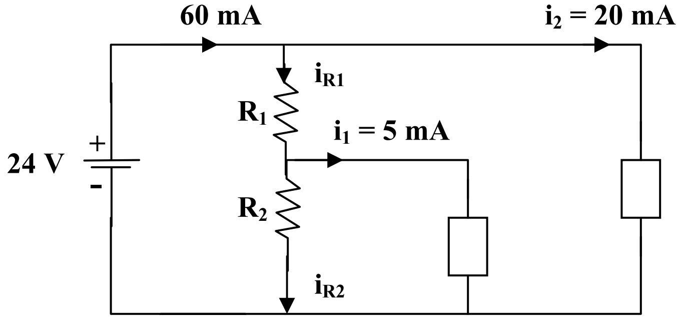

By applying KCL, we obtain

$$I_{R_1} = 60 - 20 = 40\text{ mA} \text{ and } I_{R_2} = 40 - 5 = 35\text{ mA}$$

Hence, $I_{R_1} R_1 = 24 - 9 = 15\text{ V} \longrightarrow R_1 = \dfrac{15\text{V}}{40\text{mA}} = \underline{\mathbf{375\ \Omega}}$

$$I_{R_2} R_2 = 9\text{V} \longrightarrow R_2 = \frac{9\text{V}}{35\text{mA}} = \underline{\mathbf{257.14\ \Omega}}$$

Chapter 3, Solution 1.

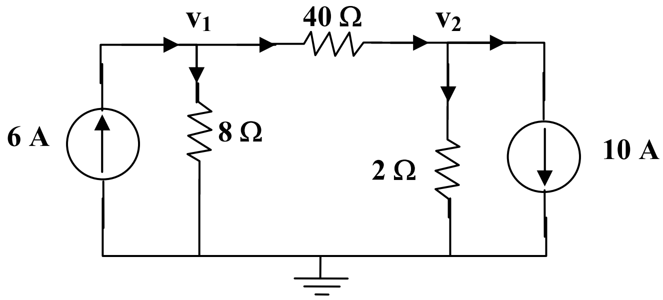

At node 1,

$6 = v_1/(8) + (v_1 - v_2)/4 \longrightarrow \quad 48 = 3v_1 - 2v_2 \qquad (1)$

At node 2,

$v_1 - v_2/4 = v_2/2 + 10 \longrightarrow \quad 40 = v_1 - 3v_2 \qquad (2)$

Solving (1) and (2),

$v_1 =$ **<u>9.143V</u>**, $v_2 =$ **<u>-10.286 V</u>**

$$P_{8\Omega} = \frac{v_1^2}{8} = \frac{(9.143)^2}{8} = \underline{\mathbf{10.45\ W}}$$

$$P_{4\Omega} = \frac{(v_1 - v_2)^2}{4} = \underline{\mathbf{94.37\ W}}$$

$$P_{2\Omega} = \frac{v_2^1}{2} = \frac{(=10.286)^2}{2} = \underline{\mathbf{52.9\ W}}$$

Chapter 3, Solution 2

At node 1,

$$\frac{-v_1}{10} - \frac{v_1}{5} = 6 + \frac{v_1 - v_2}{2} \longrightarrow 60 = -8v_1 + 5v_2 \qquad (1)$$

At node 2,

$$\frac{v_2}{4} = 3 + 6 + \frac{v_1 - v_2}{2} \longrightarrow 36 = -2v_1 + 3v_2 \qquad (2)$$

Solving (1) and (2),

$v_1 =$ **<u>0 V</u>**, $v_2 =$ **<u>12 V</u>**

Chapter 3, Solution 3

Applying KCL to the upper node,

$$10 = \frac{v_0}{10} + \frac{v_o}{20} + \frac{v_o}{30} + 2 + \frac{v_0}{60} \longrightarrow \quad v_0 = \mathbf{\underline{40\ V}}$$

$$i_1 = \frac{v_0}{10} = \mathbf{\underline{4\ A}}\ ,\ i_2 = \frac{v_0}{20} = \mathbf{\underline{2\ A}},\ i_3 = \frac{v_0}{30} = \mathbf{\underline{1.33\ A}},\ i_4 = \frac{v_0}{60} = \mathbf{\underline{67\ mA}}$$

Chapter 3, Solution 4

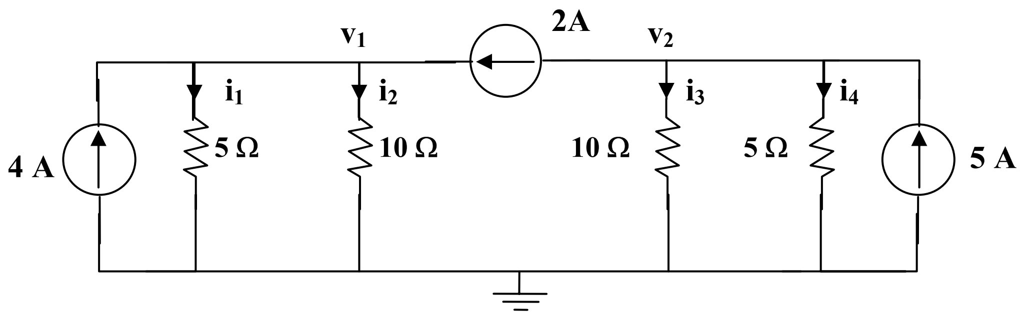

At node 1,

$$4 + 2 = v_1/(5) + v_1/(10) \longrightarrow \quad v_1 = 20$$

At node 2,

$$5 - 2 = v_2/(10) + v_2/(5) \longrightarrow \quad v_2 = 10$$

$i_1 = v_1/(5) = \mathbf{\underline{4\ A}}$, $i_2 = v_1/(10) = \mathbf{\underline{2\ A}}$, $i_3 = v_2/(10) = \mathbf{\underline{1\ A}}$, $i_4 = v_2/(5) = \mathbf{\underline{2\ A}}$

Chapter 3, Solution 5

Apply KCL to the top node.

$$\frac{30 - v_0}{2k} + \frac{20 - v_0}{6k} = \frac{v_0}{4k} \longrightarrow \quad v_0 = \mathbf{\underline{20\ V}}$$

Chapter 3, Solution 6

$i_1 + i_2 + i_3 = 0 \qquad \frac{v_2 - 12}{4} + \frac{v_0}{6} + \frac{v_0 - 10}{2} = 0$

or $v_0 =$ **8.727 V**

Chapter 3, Solution 7

At node a,

$$\frac{10 - V_a}{30} = \frac{V_a}{15} + \frac{V_a - V_b}{10} \longrightarrow 10 = 6V_a - 3V_b \qquad (1)$$

At node b,

$$\frac{V_a - V_b}{10} + \frac{12 - V_b}{20} + \frac{-9 - V_b}{5} = 0 \longrightarrow 24 = 2V_a - 7V_b \qquad (2)$$

Solving (1) and (2) leads to

$V_a = -0.556$ V, $V_b =$ **-3.444V**

Chapter 3, Solution 8

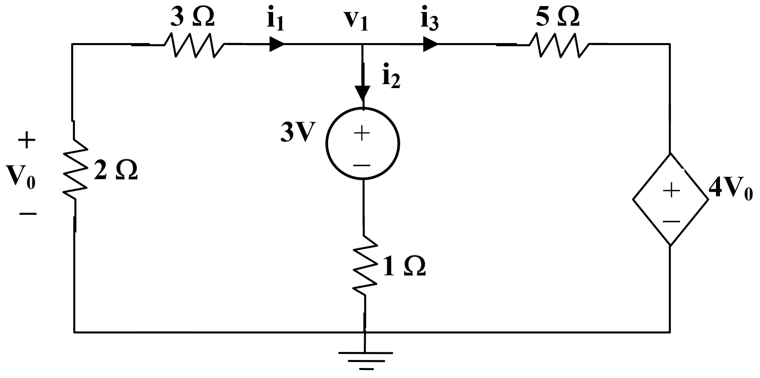

$i_1 + i_2 + i_3 = 0 \longrightarrow \frac{v_1}{5} + \frac{v_1 - 3}{1} + \frac{v_1 - 4v_0}{5} = 0$

But $\quad v_0 = \frac{2}{5}v_1$ so that $v_1 + 5v_1 - 15 + v_1 - \frac{8}{5}v_1 = 0$

or $v_1 = 15x5/(27) = 2.778$ V, therefore $v_o = 2v_1/5 =$ **1.1111 V**

Chapter 3, Solution 9

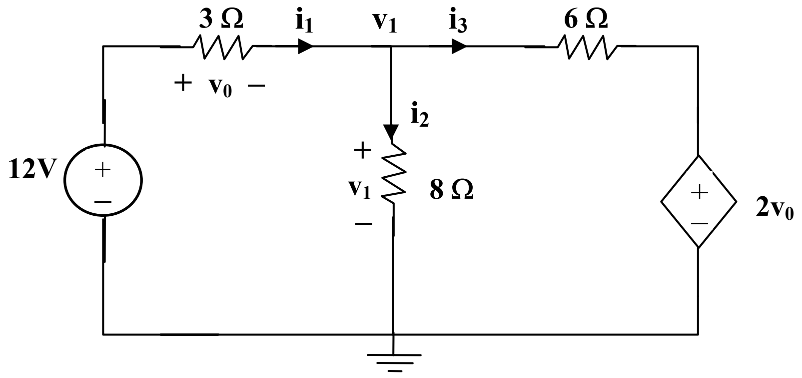

At the non-reference node,

$$\frac{12-v_1}{3} = \frac{v_1}{8} + \frac{v_1 - 2v_0}{6} \qquad (1)$$

But

$$-12 + v_0 + v_1 = 0 \longrightarrow v_0 = 12 - v_1 \qquad (2)$$

Substituting (2) into (1),

$$\frac{12-v_1}{3} = \frac{v_1}{8} + \frac{3v_1 - 24}{6} \longrightarrow v_0 = \underline{\mathbf{3.652\ V}}$$

Chapter 3, Solution 10

At node 1,

$$\frac{v_2 - v_1}{1} = 4 + \frac{v_1}{8} \longrightarrow 32 = -v_1 + 8v_2 - 8v_0 \qquad (1)$$

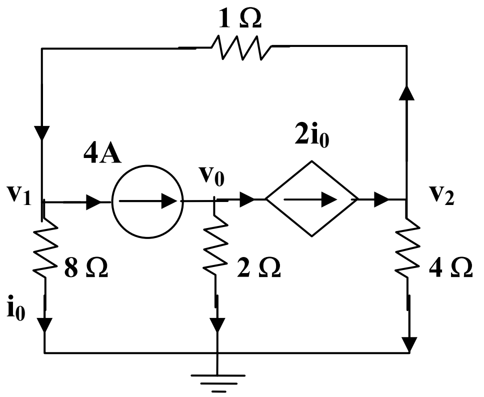

At node 0,

$$4 = \frac{v_0}{2} + 2I_0 \text{ and } I_0 = \frac{v_1}{8} \longrightarrow 16 = 2v_0 + v_1 \qquad (2)$$

At node 2,

$$2I_0 = \frac{v_2 - v_1}{1} + \frac{v_2}{4} \text{ and } I_0 = \frac{v_1}{8} \longrightarrow v_2 = v_1 \qquad (3)$$

From (1), (2) and (3), $v_0 = 24$ V, but from (2) we get

$$i_o = \frac{4 - \frac{v_o}{2}}{2} = 2 - \frac{24}{4} = 2 - 6 = \underline{\mathbf{-4\ A}}$$

Chapter 3, Solution 11

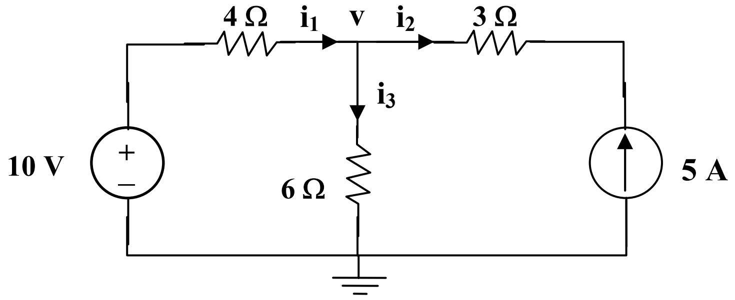

Note that $i_2 = -5$A. At the non-reference node

$$\frac{10 - v}{4} + 5 = \frac{v}{6} \longrightarrow v = 18$$

$$i_1 = \frac{10 - v}{4} = \underline{\mathbf{-2\ A}},\ i_2 = \underline{\mathbf{-5\ A}}$$

Chapter 3, Solution 12

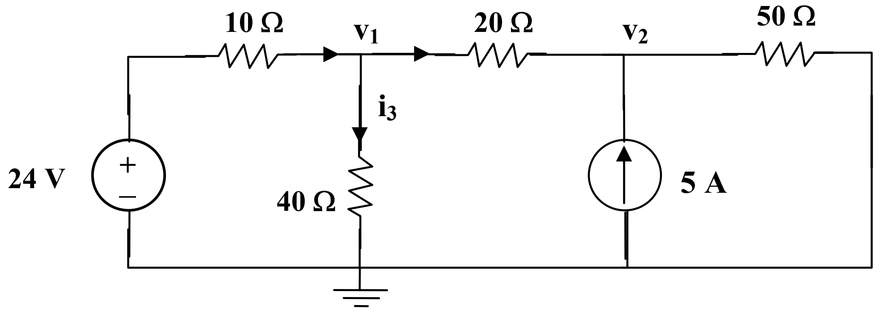

At node 1, $\frac{24 - v_1}{10} = \frac{v_1 - v_2}{20} + \frac{v_1 - 0}{40}$ ⟶ $96 = 7v_1 - 2v_2$ (1)

At node 2, $5 + \frac{v_1 - v_2}{20} = \frac{v_2}{50}$ ⟶ $500 = -5v_1 + 7v_2$ (2)

Solving (1) and (2) gives,

$v_1 = 42.87$ V, $v_2 = 102.05$ V

$i_1 = \frac{v_1}{40} =$ **1.072 A**, $v_2 = \frac{v_2}{50} =$ **2.041 A**

Chapter 3, Solution 13

At node number 2, $[(v_2 + 2) - 0]/10 + v_2/4 = 3$ or $v_2 =$ **8 volts**
But, $I = [(v_2 + 2) - 0]/10 = (8 + 2)/10 = 1$ amp and $v_1 = 8x1 =$ **8volts**

Chapter 3, Solution 14

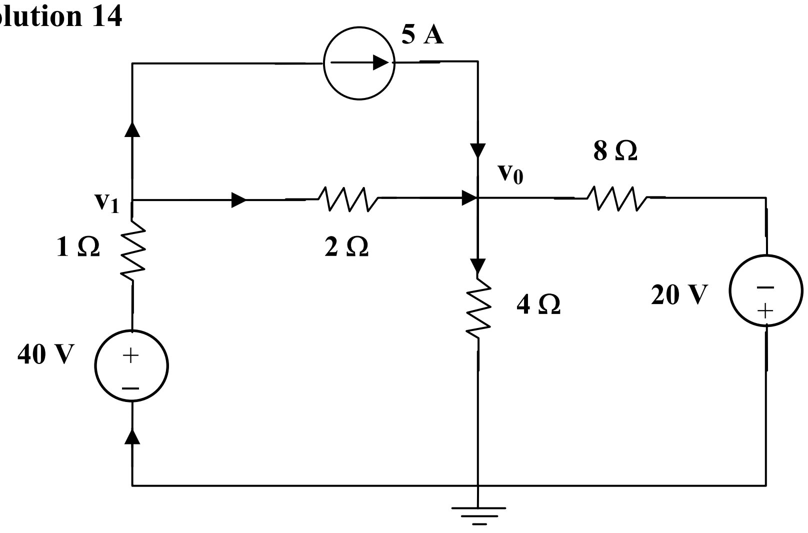

At node 1, $\frac{v_1 - v_0}{2} + 5 = \frac{40 - v_0}{1}$ ⟶ $v_1 + v_0 = 70$ (1)

At node 0, $\frac{v_1 - v_0}{2} + 5 = \frac{v_0}{4} + \frac{v_0 + 20}{8}$ ⟶ $4v_1 - 7v_0 = -20$ (2)

Solving (1) and (2), $v_0 =$ **20 V**

Chapter 3, Solution 15

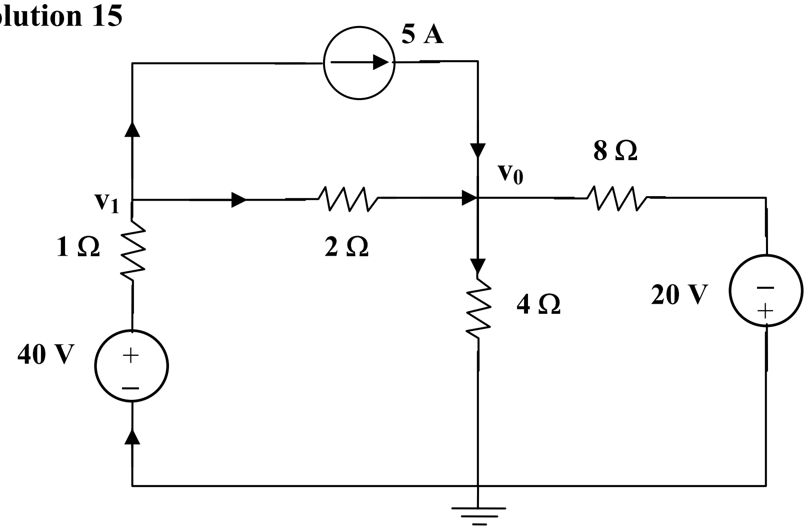

Nodes 1 and 2 form a supernode so that $v_1 = v_2 + 10$ (1)

At the supernode, $2 + 6v_1 + 5v_2 = 3\ (v_3 - v_2) \longrightarrow 2 + 6v_1 + 8v_2 = 3v_3$ (2)

At node 3, $2 + 4 = 3\ (v_3 - v_2) \longrightarrow v_3 = v_2 + 2$ (3)

Substituting (1) and (3) into (2),

$$2 + 6v_2 + 60 + 8v_2 = 3v_2 + 6 \longrightarrow v_2 = \frac{-56}{11}$$

$$v_1 = v_2 + 10 = \frac{54}{11}$$

$$i_0 = 6v_i = \underline{\mathbf{29.45\ A}}$$

$$P_{65} = \frac{v_1^2}{R} = v_1^2 G = \left(\frac{54}{11}\right)^2 6 = \underline{\mathbf{144.6\ W}}$$

$$P_{55} = v_2^2 G = \left(\frac{-56}{11}\right)^2 5 = \underline{\mathbf{129.6\ W}}$$

$$P_{35} = (v_L - v_3)^2 G = (2)^2 3 = \underline{\mathbf{12\ W}}$$

Chapter 3, Solution 16

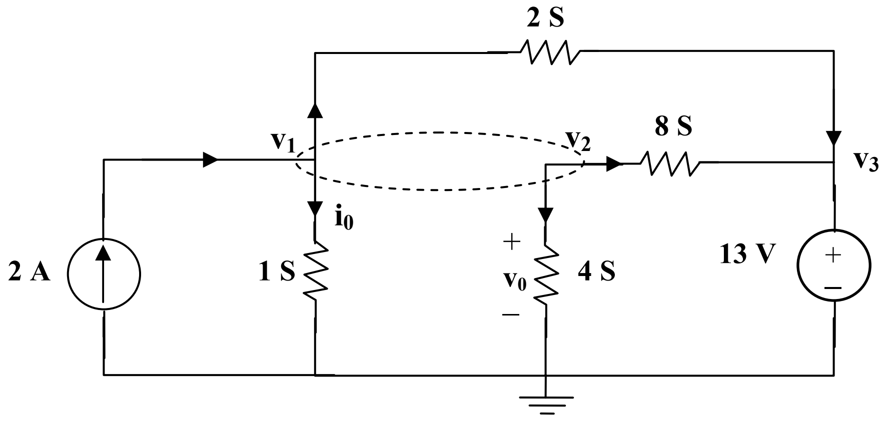

At the supernode,

$$2 = v_1 + 2\,(v_1 - v_3) + 8(v_2 - v_3) + 4v_2, \text{ which leads to } 2 = 3v_1 + 12v_2 - 10v_3 \quad (1)$$

But

$v_1 = v_2 + 2v_0$ and $v_0 = v_2$.

Hence

$$v_1 = 3v_2 \quad (2)$$
$$v_3 = 13V \quad (3)$$

Substituting (2) and (3) with (1) gives,

$v_1 =$ **18.858 V**, $v_2 =$ **6.286 V**, $v_3 =$ **13 V**

Chapter 3, Solution 17

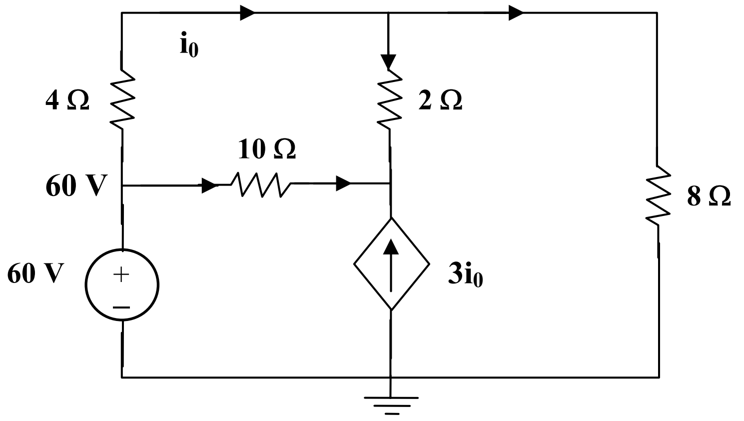

At node 1, $\frac{60 - v_1}{4} = \frac{v_1}{8} + \frac{v_1 - v_2}{2}$ $\qquad$ $120 = 7v_1 - 4v_2$ $\qquad$ (1)

At node 2, $3i_0 + \frac{60 - v_2}{10} + \frac{v_1 - v_2}{2} = 0$

But $i_0 = \frac{60 - v_1}{4}$.

Hence

$$\frac{3(60 - v_1)}{4} + \frac{60 - v_2}{10} + \frac{v_1 - v_2}{2} = 0 \longrightarrow 1020 = 5v_1 - 12v_2 \qquad (2)$$

Solving (1) and (2) gives $v_1 = 53.08$ V. Hence $i_0 = \frac{60 - v_1}{4} =$ **1.73 A**

Chapter 3, Solution 18

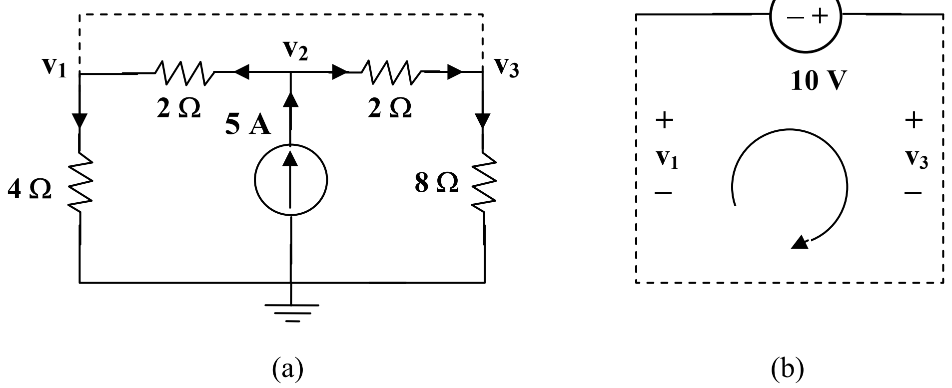

At node 2, in Fig. (a), $5 = \frac{v_2 - v_1}{2} + \frac{v_2 - v_3}{2} \longrightarrow 10 = -v_1 + 2v_2 - v_3$ $\qquad$ (1)

At the supernode, $\frac{v_2 - v_1}{2} + \frac{v_2 - v_3}{2} = \frac{v_1}{4} + \frac{v_3}{8} \longrightarrow 40 = 2v_1 + v_3$ $\qquad$ (2)

From Fig. (b), $-v_1 - 10 + v_3 = 0 \longrightarrow v_3 = v_1 + 10$ $\qquad$ (3)

Solving (1) to (3), we obtain $v_1 =$ **10 V**, $v_2 =$ **20 V** $= v_3$

Chapter 3, Solution 19

At node 1,

$$5 = 3 + \frac{V_1 - V_3}{2} + \frac{V_1 - V_2}{8} + \frac{V_1}{4} \longrightarrow 16 = 7V_1 - V_2 - 4V_3 \qquad (1)$$

At node 2,

$$\frac{V_1 - V_2}{8} = \frac{V_2}{2} + \frac{V_2 - V_3}{4} \longrightarrow 0 = -V_1 + 7V_2 - 2V_3 \qquad (2)$$

At node 3,

$$3 + \frac{12 - V_3}{8} + \frac{V_1 - V_3}{2} + \frac{V_2 - V_3}{4} = 0 \longrightarrow -36 = 4V_1 + 2V_2 - 7V_3 \quad (3)$$

From (1) to (3),

$$\begin{pmatrix} 7 & -1 & -4 \\ -1 & 7 & -2 \\ 4 & 2 & -7 \end{pmatrix}\begin{pmatrix} V_1 \\ V_2 \\ V_3 \end{pmatrix} = \begin{pmatrix} 16 \\ 0 \\ -36 \end{pmatrix} \longrightarrow AV = B$$

Using MATLAB,

$$V = A^{-1}B = \begin{bmatrix} 10 \\ 4.933 \\ 12.267 \end{bmatrix} \longrightarrow \underline{V_1 = 10\text{ V},\ V_2 = 4.933\text{ V},\ V_3 = 12.267\text{ V}}$$

Chapter 3, Solution 20

Nodes 1 and 2 form a supernode; so do nodes 1 and 3. Hence

$$\frac{V_1}{4} + \frac{V_2}{1} + \frac{V_3}{4} = 0 \longrightarrow V_1 + 4V_2 + V_3 = 0 \qquad (1)$$

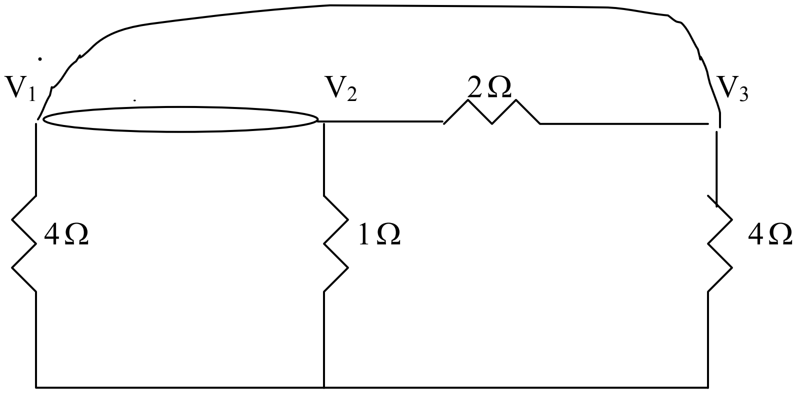

Between nodes 1 and 3,

$$-V_1 + 12 + V_3 = 0 \quad \longrightarrow \quad V_3 = V_1 - 12 \qquad (2)$$

Similarly, between nodes 1 and 2,

$$V_1 = V_2 + 2i \qquad (3)$$

But $i = V_3 / 4$. Combining this with (2) and (3) gives

$$.V_2 = 6 + V_1 / 2 \qquad (4)$$

Solving (1), (2), and (4) leads to

$\underline{V_1 = -3\text{V}, \quad V_2 = 4.5\text{V}, V_3 = -15\text{V}}$

Chapter 3, Solution 21

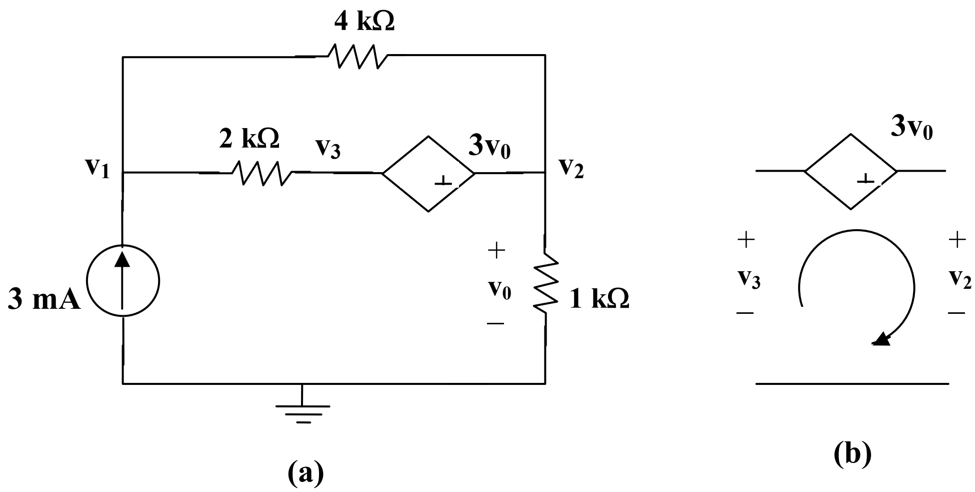

Let v_3 be the voltage between the 2kΩ resistor and the voltage-controlled voltage source.
At node 1,

$$3\text{x}10^{-3} = \frac{v_1 - v_2}{4000} + \frac{v_1 - v_3}{2000} \longrightarrow 12 = 3v_1 - v_2 - 2v_3 \qquad (1)$$

At node 2,

$$\frac{v_1 - v_2}{4} + \frac{v_1 - v_3}{2} = \frac{v_2}{1} \longrightarrow 3v_1 - 5v_2 - 2v_3 = 0 \qquad (2)$$

Note that $v_0 = v_2$. We now apply KVL in Fig. (b)

$$- v_3 - 3v_2 + v_2 = 0 \longrightarrow v_3 = - 2v_2 \qquad (3)$$

From (1) to (3),

$v_1 = \underline{\mathbf{1\ V}}$, $v_2 = \underline{\mathbf{3\ V}}$

Chapter 3, Solution 22

At node 1, $\frac{12 - v_0}{2} = \frac{v_1}{4} + 3 + \frac{v_1 - v_0}{8} \longrightarrow \quad 24 = 7v_1 - v_2 \qquad (1)$

At node 2, $3 + \frac{v_1 - v_2}{8} = \frac{v_2 + 5v_2}{1}$

But, $v_1 = 12 - v_1$

Hence, $24 + v_1 - v_2 = 8 (v_2 + 60 + 5v_1) = 4$ V

$456 = 41v_1 - 9v_2 \qquad (2)$

Solving (1) and (2),

v_1 = **<u>- 10.91 V</u>**, v_2 = **<u>- 100.36 V</u>**

Chapter 3, Solution 23

At the supernode, $5 + 2 = \frac{v_1}{10} + \frac{v_2}{5} \longrightarrow 70 = v_1 + 2v_2 \qquad (1)$

Considering Fig. (b), $- v_1 - 8 + v_2 = 0 \longrightarrow v_2 = v_1 + 8 \qquad (2)$

Solving (1) and (2),

v_1 = **<u>18 V</u>**, v_2 = **<u>26 V</u>**

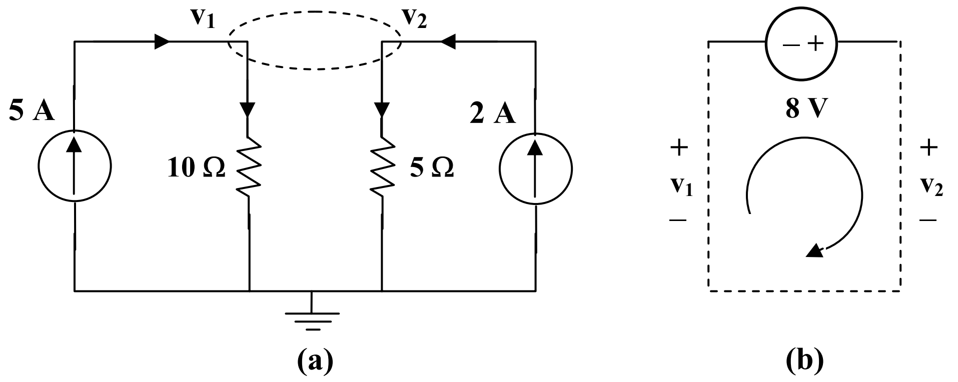

Chapter 3, Solution 24

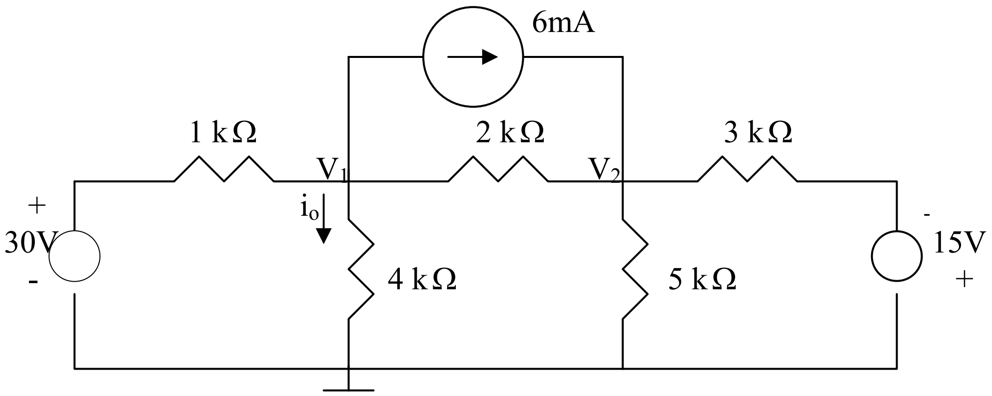

At node 1,

$$\frac{30 - V_1}{1} = 6 + \frac{V_1}{4} + \frac{V_1 - V_2}{2} \longrightarrow 96 = 7V_1 - 2V_2 \qquad (1)$$

At node 2,

$$6 + \frac{(-15 - V_2)}{3} = \frac{V_2}{5} + \frac{V_2 - V_1}{2} \longrightarrow 30 = -15V_1 + 31V_2 \qquad (2)$$

Solving (1) and (2) gives V_1=16.24. Hence

$i_o = V_1/4$ = 4.06 mA

Chapter 3, Solution 25

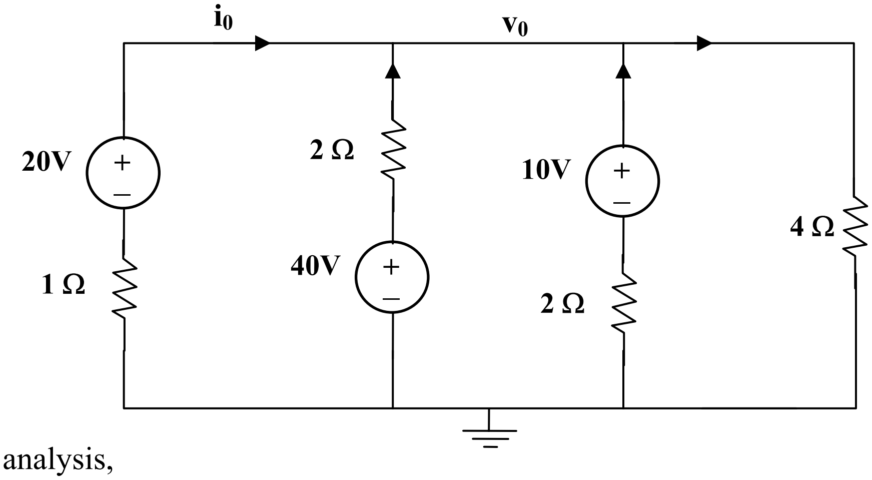

Using nodal analysis,

$$\frac{20 - v_0}{1} + \frac{40 - v_0}{2} + \frac{10 - v_0}{2} = \frac{v_0 - 0}{4} \longrightarrow v_0 = \mathbf{\underline{20V}}$$

$$i_0 = \frac{20 - v_0}{1} = \mathbf{\underline{0\ A}}$$

Chapter 3, Solution 26

At node 1,

$$\frac{15-V_1}{20} = 3 + \frac{V_1 - V_3}{10} + \frac{V_1 - V_2}{5} \longrightarrow -45 = 7V_1 - 4V_2 - 2V_3 \qquad (1)$$

At node 2,

$$\frac{V_1 - V_2}{5} + \frac{4I_o - V_2}{5} = \frac{V_2 - V_3}{5} \qquad (2)$$

But $I_o = \frac{V_1 - V_3}{10}$. Hence, (2) becomes

$$0 = 7V_1 - 15V_2 + 3V_3 \qquad (3)$$

At node 3,

$$3 + \frac{V_1 - V_3}{10} + \frac{-10 - V_3}{5} + \frac{V_2 - V_3}{5} = 0 \longrightarrow -10 = V_1 + 2V_2 - 5V_3 \qquad (4)$$

Putting (1), (3), and (4) in matrix form produces

$$\begin{pmatrix} 7 & -4 & -2 \\ 7 & -15 & 3 \\ 1 & 2 & -5 \end{pmatrix} \begin{pmatrix} V_1 \\ V_2 \\ V_3 \end{pmatrix} = \begin{pmatrix} -45 \\ 0 \\ -10 \end{pmatrix} \longrightarrow AV = B$$

Using MATLAB leads to

$$V = A^{-1}B = \begin{pmatrix} -9.835 \\ -4.982 \\ -1.96 \end{pmatrix}$$

Thus,

$$\underline{V_1 = -9.835 \text{ V}, \;\; V_2 = -4.982 \text{ V}, \; V_3 = -1.95 \text{ V}}$$

Chapter 3, Solution 27

At node 1,

$$2 = 2v_1 + v_1 - v_2 + (v_1 - v_3)4 + 3i_0, \quad i_0 = 4v_2. \text{ Hence,}$$

$$2 = 7v_1 + 11v_2 - 4v_3 \qquad (1)$$

At node 2,

$$v_1 - v_2 = 4v_2 + v_2 - v_3 \longrightarrow 0 = -v_1 + 6v_2 - v_3 \qquad (2)$$

At node 3,

$$2v_3 = 4 + v_2 - v_3 + 12v_2 + 4(v_1 - v_3)$$

or $$-4 = 4v_1 + 13v_2 - 7v_3 \qquad (3)$$

In matrix form,

$$\begin{bmatrix} 7 & 11 & -4 \\ 1 & -6 & 1 \\ 4 & 13 & -7 \end{bmatrix} \begin{bmatrix} v_1 \\ v_2 \\ v_3 \end{bmatrix} = \begin{bmatrix} 2 \\ 0 \\ -4 \end{bmatrix}$$

$$\Delta = \begin{vmatrix} 7 & 11 & -4 \\ 1 & -6 & 1 \\ 4 & 13 & -7 \end{vmatrix} = 176, \quad \Delta_1 = \begin{vmatrix} 2 & 11 & -4 \\ 0 & -6 & 1 \\ -4 & 13 & -7 \end{vmatrix} = 110$$

$$\Delta_2 = \begin{vmatrix} 7 & 2 & -4 \\ 1 & 0 & 1 \\ 4 & -4 & -7 \end{vmatrix} = 66, \quad \Delta_3 = \begin{vmatrix} 7 & 11 & 2 \\ 1 & -6 & 0 \\ 4 & 13 & -4 \end{vmatrix} = 286$$

$$v_1 = \frac{\Delta_1}{\Delta} = \frac{110}{176} = 0.625\text{V}, \quad v_2 = \frac{\Delta_2}{\Delta} = \frac{66}{176} = 0.375\text{V}$$

$$v_3 = \frac{\Delta_3}{\Delta} = \frac{286}{176} = 1.625\text{V}.$$

v_1 = **625 mV**, v_2 = **375 mV**, v_3 = **1.625 V**.

Chapter 3, Solution 28

At node c,

$$\frac{V_d - V_c}{10} = \frac{V_c - V_b}{4} + \frac{V_c}{5} \longrightarrow 0 = -5V_b + 11V_c - 2V_d \qquad (1)$$

At node b,

$$\frac{V_a + 45 - V_b}{8} + \frac{V_c - V_b}{4} = \frac{V_b}{8} \longrightarrow -45 = V_a - 4V_b + 2V_c \qquad (2)$$

At node a,

$$\frac{V_a - 30 - V_d}{4} + \frac{V_a}{16} + \frac{V_a + 45 - V_b}{8} = 0 \longrightarrow 30 = 7V_a - 2V_b - 4V_d \qquad (3)$$

At node d,

$$\frac{V_a - 30 - V_d}{4} = \frac{V_d}{20} + \frac{V_d - V_c}{10} \longrightarrow 150 = 5V_a + 2V_c - 7V_d \qquad (4)$$

In matrix form, (1) to (4) become

$$\begin{pmatrix} 0 & -5 & 11 & -2 \\ 1 & -4 & 2 & 0 \\ 7 & -2 & 0 & -4 \\ 5 & 0 & 2 & -7 \end{pmatrix}\begin{pmatrix} V_a \\ V_b \\ V_c \\ V_d \end{pmatrix} = \begin{pmatrix} 0 \\ -45 \\ 30 \\ 150 \end{pmatrix} \longrightarrow \quad AV = B$$

We use MATLAB to invert A and obtain

$$V = A^{-1}B = \begin{pmatrix} -10.14 \\ 7.847 \\ -1.736 \\ -29.17 \end{pmatrix}$$

Thus,

$$\underline{V_a = -10.14\text{ V},\ V_b = 7.847\text{ V},\ V_c = -1.736\text{ V},\ V_d = -29.17\text{ V}}$$

Chapter 3, Solution 29

At node 1,

$$5 + V_1 - V_4 + 2V_1 + V_1 - V_2 = 0 \longrightarrow -5 = 4V_1 - V_2 - V_4 \qquad (1)$$

At node 2,

$$V_1 - V_2 = 2V_2 + 4(V_2 - V_3) = 0 \longrightarrow 0 = -V_1 + 7V_2 - 4V_3 \qquad (2)$$

At node 3,

$$6 + 4(V_2 - V_3) = V_3 - V_4 \longrightarrow 6 = -4V_2 + 5V_3 - V_4 \qquad (3)$$

At node 4,

$$2 + V_3 - V_4 + V_1 - V_4 = 3V_4 \longrightarrow 2 = -V_1 - V_3 + 5V_4 \qquad (4)$$

In matrix form, (1) to (4) become

$$\begin{pmatrix} 4 & -1 & 0 & -1 \\ -1 & 7 & -4 & 0 \\ 0 & -4 & 5 & -1 \\ -1 & 0 & -1 & 5 \end{pmatrix}\begin{pmatrix} V_1 \\ V_2 \\ V_3 \\ V_4 \end{pmatrix} = \begin{pmatrix} -5 \\ 0 \\ 6 \\ 2 \end{pmatrix} \longrightarrow \quad AV = B$$

Using MATLAB,

$$V = A^{-1}B = \begin{pmatrix} -0.7708 \\ 1.209 \\ 2.309 \\ 0.7076 \end{pmatrix}$$

i.e.

$$\underline{V_1 = -0.7708\text{ V},\ V_2 = 1.209\text{ V},\ V_3 = 2.309\text{ V},\ V_4 = 0.7076\text{ V}}$$

Chapter 3, Solution 30

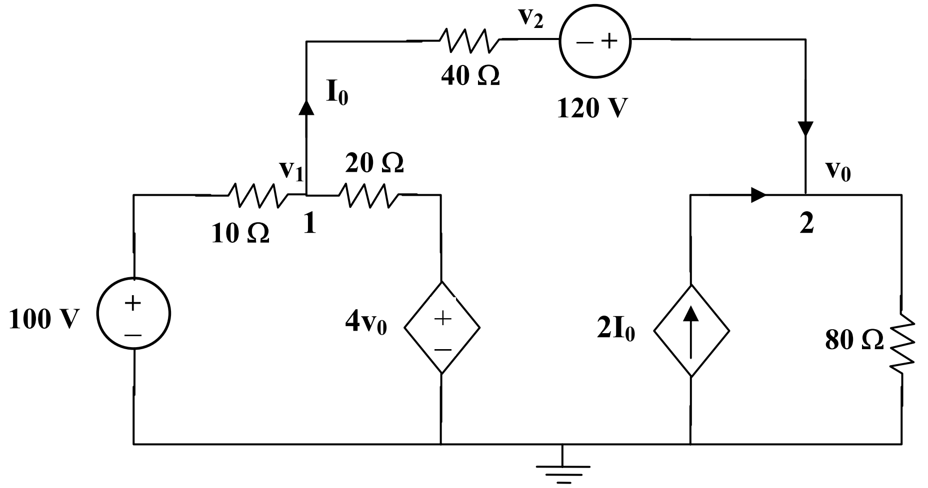

At node 1,

$$\frac{v_1 - v_2}{40} = \frac{100 - v_1}{10} + \frac{4v_o - v_1}{20} \qquad (1)$$

But, $v_o = 120 + v_2 \longrightarrow v_2 = v_o - 120$. Hence (1) becomes

$$7v_1 - 9v_o = 280 \qquad (2)$$

At node 2,

$$I_o + 2I_o = \frac{v_o - 0}{80}$$

$$3\left(\frac{v_1 + 120 - v_o}{40}\right) = \frac{v_o}{80}$$

or $$6v_1 - 7v_o = -720 \qquad (3)$$

from (2) and (3), $$\begin{bmatrix} 7 & -9 \\ 6 & -7 \end{bmatrix}\begin{bmatrix} v_1 \\ v_o \end{bmatrix} = \begin{bmatrix} 280 \\ -720 \end{bmatrix}$$

$$\Delta = \begin{vmatrix} 7 & -9 \\ 6 & -7 \end{vmatrix} = -49 + 54 = 5$$

$$\Delta_1 = \begin{vmatrix} 280 & -9 \\ -720 & -7 \end{vmatrix} = -8440, \quad \Delta_2 = \begin{vmatrix} 7 & 280 \\ 6 & -720 \end{vmatrix} = -6720$$

$$v_1 = \frac{\Delta_1}{\Delta} = \frac{-8440}{5} = -1688, \quad v_o = \frac{\Delta_2}{\Delta} = \frac{-6720}{5} - 1344\text{V}$$

I_o = **-5.6 A**

Chapter 3, Solution 31

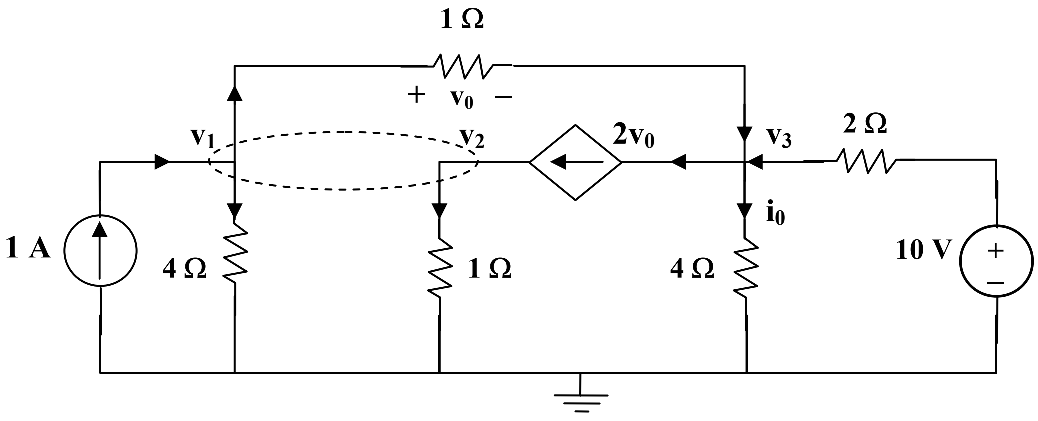

At the supernode,

$$1 + 2v_0 = \frac{v_1}{4} + \frac{v_2}{1} + \frac{v_1 - v_3}{1} \qquad (1)$$

But $v_o = v_1 - v_3$. Hence (1) becomes,

$$4 = -3v_1 + 4v_2 + 4v_3 \qquad (2)$$

At node 3,

$$2v_o + \frac{v_2}{4} = v_1 - v_3 + \frac{10 - v_3}{2}$$

or

$$20 = 4v_1 + v_2 - 2v_3 \qquad (3)$$

At the supernode, $v_2 = v_1 + 4i_o$. But $i_o = \frac{v_3}{4}$. Hence,

$$v_2 = v_1 + v_3 \qquad (4)$$

Solving (2) to (4) leads to,

v_1 = **4 V**, v_2 = **4 V**, v_3 = **0 V**.

Chapter 3, Solution 32

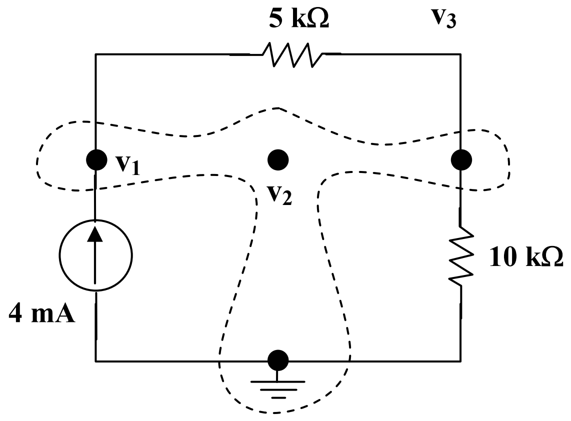

(a)

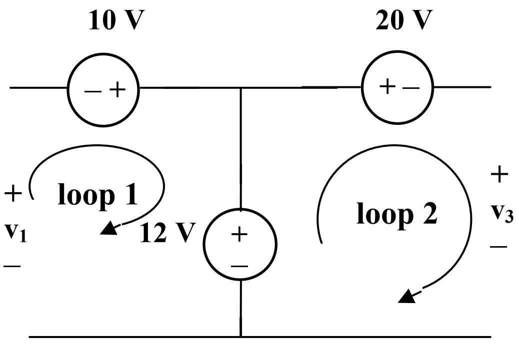

(b)

We have a supernode as shown in figure (a). It is evident that $v_2 = 12$ V, Applying KVL to loops 1and 2 in figure (b), we obtain,

$$-v_1 - 10 + 12 = 0 \text{ or } v_1 = 2 \text{ and } -12 + 20 + v_3 = 0 \text{ or } v_3 = -8 \text{ V}$$

Thus, $v_1 = \underline{\mathbf{2\ V}}$, $v_2 = \underline{\mathbf{12\ V}}$, $v_3 = \underline{\mathbf{-8V}}$.

Chapter 3, Solution 33

(a) This is a **non-planar** circuit because there is no way of redrawing the circuit with no crossing branches.

(b) This is a **planar** circuit. It can be redrawn as shown below.

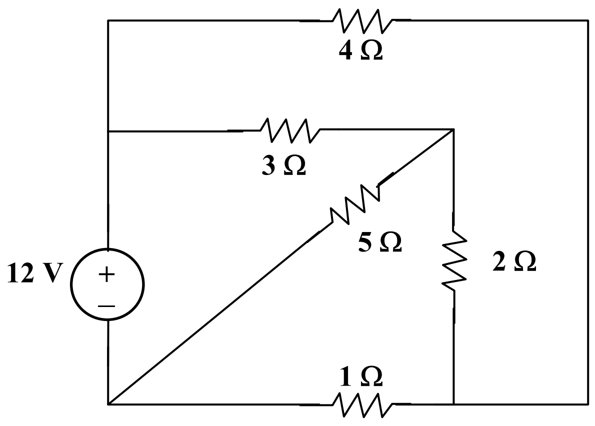

Chapter 3, Solution 34

(a) This is a **planar** circuit because it can be redrawn as shown below,

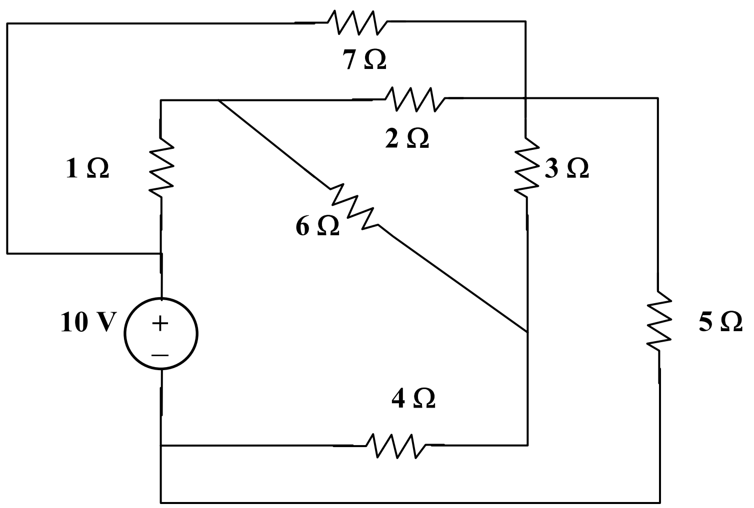

(b) This is a **non-planar** circuit.

Chapter 3, Solution 35

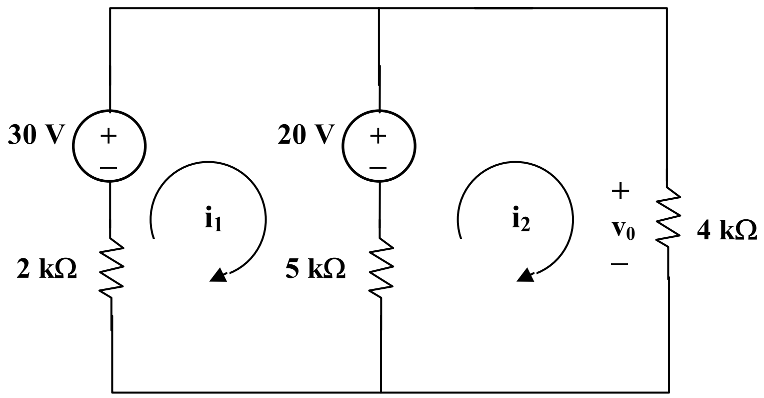

Assume that i_1 and i_2 are in mA. We apply mesh analysis. For mesh 1,

$$-30 + 20 + 7i_1 - 5i_2 = 0 \quad \text{or} \quad 7i_1 - 5i_2 = 10 \qquad (1)$$

For mesh 2,

$$-20 + 9i_2 - 5i_1 = 0 \quad \text{or} \quad -5i_1 + 9i_2 = 20 \qquad (2)$$

Solving (1) and (2), we obtain, $i_2 = 5$.

$v_0 = 4i_2 =$ **20 volts**.

Chapter 3, Solution 36

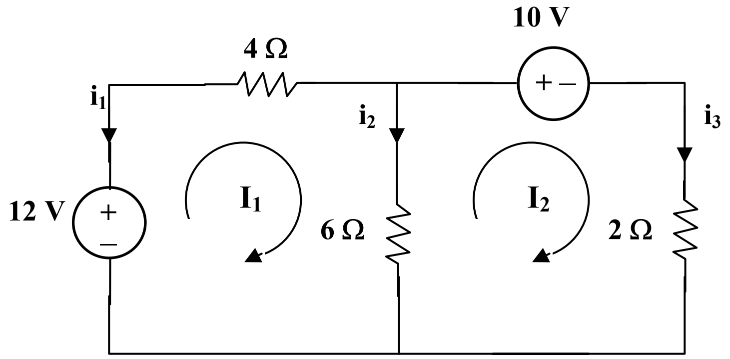

Applying mesh analysis gives,

$$12 = 10I_1 - 6I_2$$

$$-10 = -6I_1 + 8I_2$$

or

$$\begin{bmatrix} 6 \\ -5 \end{bmatrix} = \begin{bmatrix} 5 & -3 \\ -3 & 4 \end{bmatrix} \begin{bmatrix} I_1 \\ I_2 \end{bmatrix}$$

$$\Delta = \begin{vmatrix} 5 & -3 \\ -3 & 4 \end{vmatrix} = 11, \quad \Delta_1 = \begin{vmatrix} 6 & -3 \\ -5 & 4 \end{vmatrix} = 9, \quad \Delta_2 = \begin{vmatrix} 5 & 6 \\ -3 & -5 \end{vmatrix} = -7$$

$$I_1 = \frac{\Delta_1}{\Delta} = \frac{9}{11}, \quad I_2 = \frac{\Delta_2}{\Delta} = \frac{-7}{11}$$

$i_1 = -I_1 = -9/11 = -0.8181$ A, $i_2 = I_1 - I_2 = 10/11 = 1.4545$ A.

$v_o = 6i_2 = 6x1.4545 =$ <u>8.727 V</u>.

Chapter 3, Solution 37

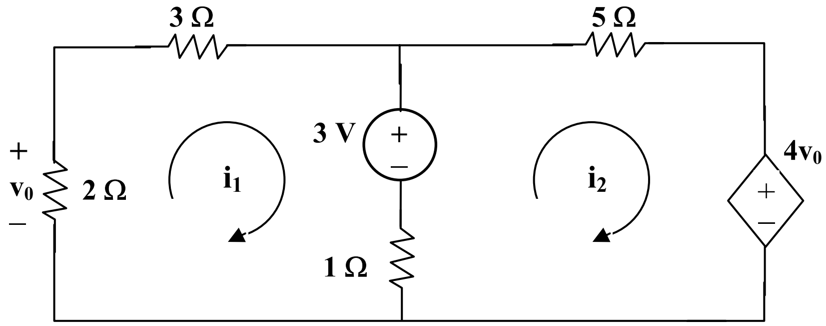

Applying mesh analysis to loops 1 and 2, we get,

$6i_1 - 1i_2 + 3 = 0$ which leads to $i_2 = 6i_1 + 3$ (1)

$-1i_1 + 6i_2 - 3 + 4v_0 = 0$ (2)

But, $v_0 = -2i_1$ (3)

Using (1), (2), and (3) we get $i_1 = -5/9$.

Therefore, we get $v_0 = -2i_1 = -2(-5/9) =$ **1.111 volts**

Chapter 3, Solution 38

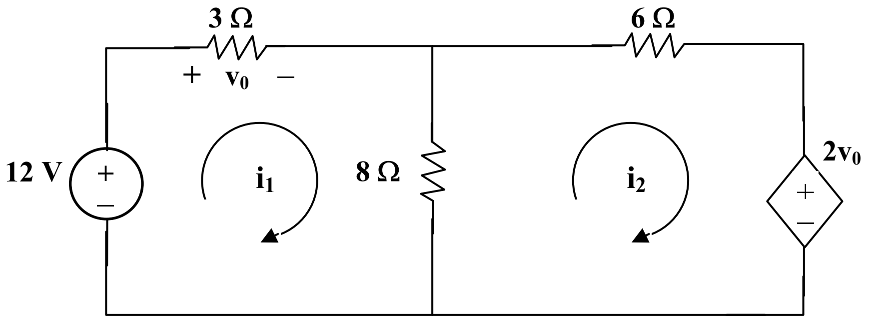

We apply mesh analysis.

$12 = 3\ i_1 + 8(i_1 - i_2)$ which leads to $12 = 11\ i_1 - 8\ i_2$ (1)

$-2\ v_0 = 6\ i_2 + 8(i_2 - i_1)$ and $v_0 = 3\ i_1$ or $i_1 = 7\ i_2$ (2)

From (1) and (2), $i_1 = 84/69$ and $v_0 = 3\ i_1 = 3x89/69$

$v_0 =$ **3.652 volts**

Chapter 3, Solution 39

For mesh 1,

$$-10 - 2I_x + 10I_1 - 6I_2 = 0$$

But $I_x = I_1 - I_2$. Hence,

$10 = -12I_1 + 12I_2 + 10I_1 - 6I_2 \longrightarrow 5 = 4I_1 - 2I_2$ (1)

For mesh 2,

$12 + 8I_2 - 6I_1 = 0 \longrightarrow 6 = 3I_1 - 4I_2$ (2)

Solving (1) and (2) leads to

$\underline{I_1 = 0.8\text{ A},\ I_2 = \text{-0.9A}}$

Chapter 3, Solution 40

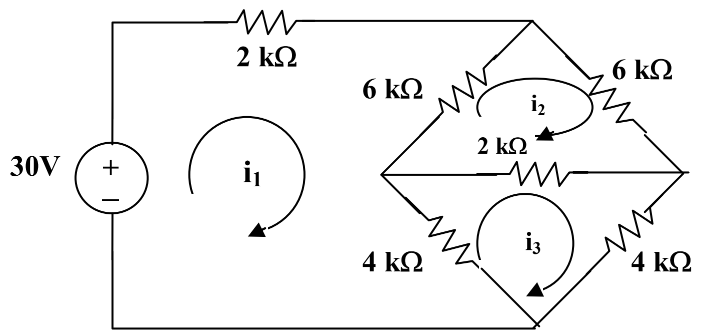

Assume all currents are in mA and apply mesh analysis for mesh 1.

$$30 = 12i_1 - 6i_2 - 4i_3 \longrightarrow 15 = 6i_1 - 3i_2 - 2i_3 \qquad (1)$$

for mesh 2,

$$0 = -\,6i_1 + 14i_2 - 2i_3 \longrightarrow 0 = -3i_1 + 7i_2 - i_3 \qquad (2)$$

for mesh 2,

$$0 = -4i_1 - 2i_2 + 10i_3 \qquad 0 = -2i_1 - i_2 + 5i_3 \qquad (3)$$

Solving (1), (2), and (3), we obtain,

$i_o = i_1 =$ **<u>4.286 mA</u>**.

Chapter 3, Solution 41

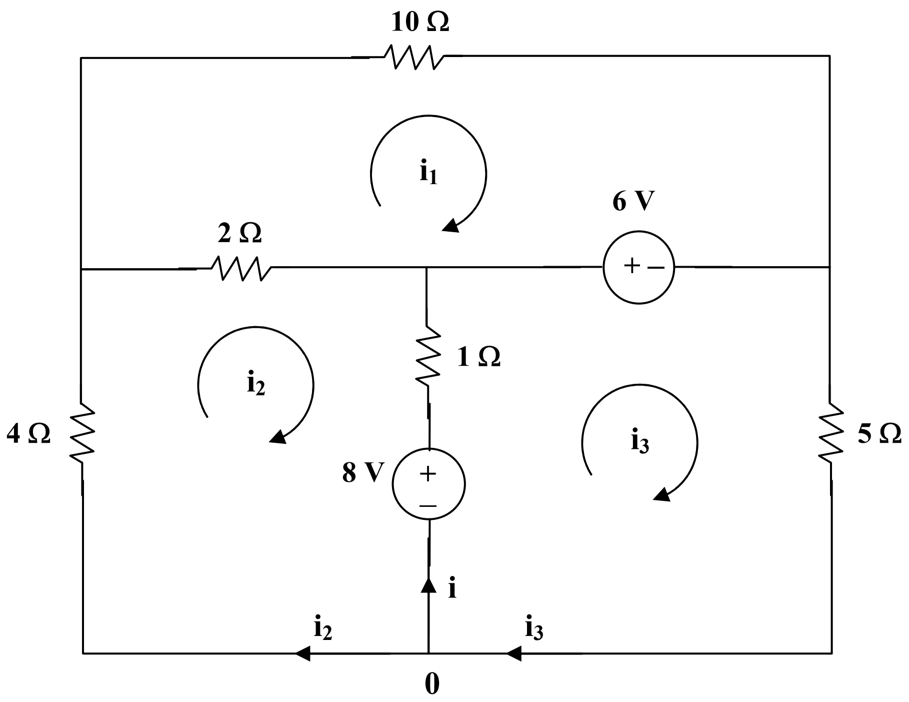

For loop 1,

$$6 = 12i_1 - 2i_2 \longrightarrow 3 = 6i_1 - i_2 \qquad (1)$$

For loop 2,

$$-8 = 7i_2 - 2i_1 - i_3 \qquad (2)$$

For loop 3,

$$-8 + 6 + 6i_3 - i_2 = 0 \longrightarrow 2 = 6i_3 - i_2 \qquad (3)$$

We put (1), (2), and (3) in matrix form,

$$\begin{bmatrix} 6 & -1 & 0 \\ 2 & -7 & 1 \\ 0 & -1 & 6 \end{bmatrix} \begin{bmatrix} i_1 \\ i_2 \\ i_3 \end{bmatrix} = \begin{bmatrix} 3 \\ 8 \\ 2 \end{bmatrix}$$

$$\Delta = \begin{vmatrix} 6 & -1 & 0 \\ 2 & -7 & 1 \\ 0 & -1 & 6 \end{vmatrix} = -234, \quad \Delta_2 = \begin{vmatrix} 6 & 3 & 0 \\ 2 & 8 & 1 \\ 0 & 2 & 6 \end{vmatrix} = -240$$

$$\Delta_3 = \begin{vmatrix} 6 & -1 & 3 \\ 2 & -7 & 8 \\ 0 & -1 & 2 \end{vmatrix} = -38$$

At node 0, $i + i_2 = i_3$ or $i = i_3 - i_2 = \frac{\Delta_3 - \Delta_2}{\Delta} = \frac{-38 - 240}{-234} =$ **1.188 A**

Chapter 3, Solution 42

For mesh 1,

$$-12 + 50I_1 - 30I_2 = 0 \quad \longrightarrow \quad 12 = 50I_1 - 30I_2 \qquad (1)$$

For mesh 2,

$$-8 + 100I_2 - 30I_1 - 40I_3 = 0 \quad \longrightarrow \quad 8 = -30I_1 + 100I_2 - 40I_3 \qquad (2)$$

For mesh 3,

$$-6 + 50I_3 - 40I_2 = 0 \quad \longrightarrow \quad 6 = -40I_2 + 50I_3 \qquad (3)$$

Putting eqs. (1) to (3) in matrix form, we get

$$\begin{pmatrix} 50 & -30 & 0 \\ -30 & 100 & -40 \\ 0 & -40 & 50 \end{pmatrix} \begin{pmatrix} I_1 \\ I_2 \\ I_3 \end{pmatrix} = \begin{pmatrix} 12 \\ 8 \\ 6 \end{pmatrix} \quad \longrightarrow \quad AI = B$$

Using Matlab,

$$I = A^{-1}B = \begin{pmatrix} 0.48 \\ 0.40 \\ 0.44 \end{pmatrix}$$

i.e. $\underline{I_1 = 0.48 \text{ A}, \; I_2 = 0.4 \text{ A}, \; I_3 = 0.44 \text{ A}}$

Chapter 3, Solution 43

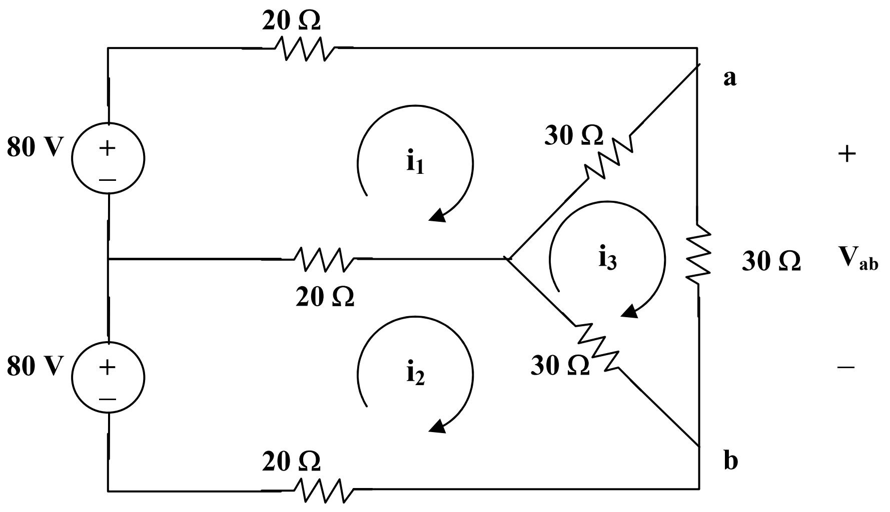

For loop 1,

$$80 = 70i_1 - 20i_2 - 30i_3 \quad \longrightarrow \quad 8 = 7i_1 - 2i_2 - 3i_3 \qquad (1)$$

For loop 2,

$$80 = 70i_2 - 20i_1 - 30i_3 \longrightarrow 8 = -2i_1 + 7i_2 - 3i_3 \qquad (2)$$

For loop 3,

$$0 = -30i_1 - 30i_2 + 90i_3 \longrightarrow 0 = i_1 + i_2 - 3i_3 \qquad (3)$$

Solving (1) to (3), we obtain $i_3 = 16/9$

$$I_o = i_3 = 16/9 = \underline{\mathbf{1.778\ A}}$$

$V_{ab} = 30i_3 =$ **<u>53.33 V</u>**.

Chapter 3, Solution 44

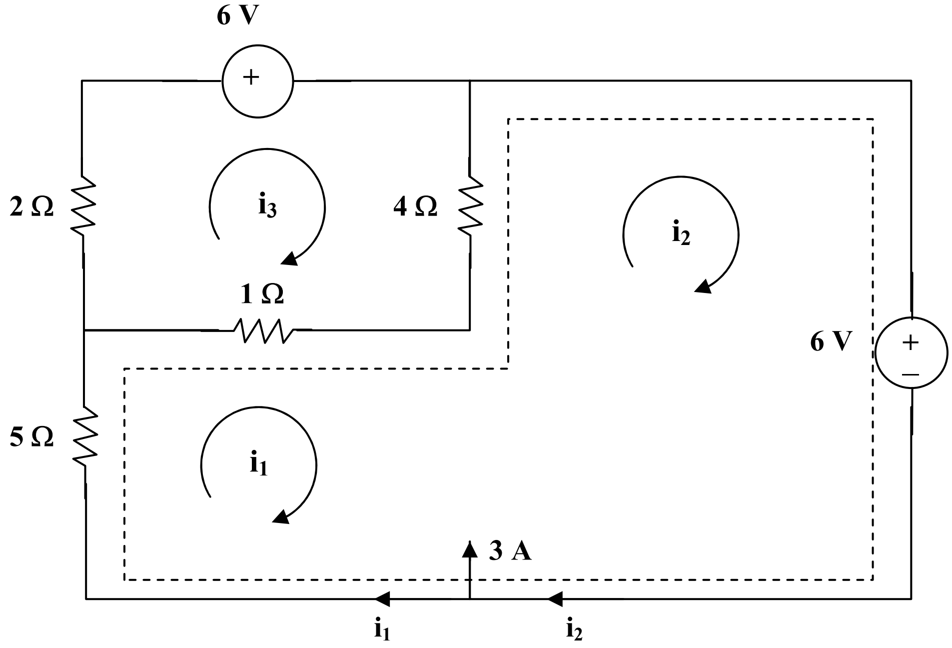

Loop 1 and 2 form a supermesh. For the supermesh,

$$6i_1 + 4i_2 - 5i_3 + 12 = 0 \qquad (1)$$

For loop 3, $\quad -i_1 - 4i_2 + 7i_3 + 6 = 0 \qquad (2)$

Also, $\quad i_2 = 3 + i_1 \qquad (3)$

Solving (1) to (3), $i_1 = -3.067$, $i_3 = -1.3333$; $i_o = i_1 - i_3 =$ **<u>-1.7333 A</u>**

Chapter 3, Solution 45

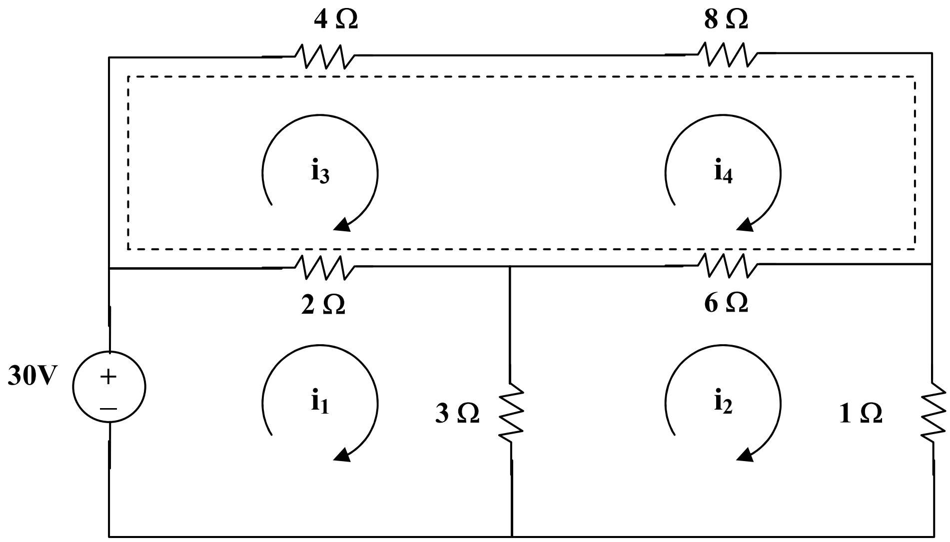

For loop 1, $30 = 5i_1 - 3i_2 - 2i_3$ (1)

For loop 2, $10i_2 - 3i_1 - 6i_4 = 0$ (2)

For the supermesh, $6i_3 + 14i_4 - 2i_1 - 6i_2 = 0$ (3)

But $i_4 - i_3 = 4$ which leads to $i_4 = i_3 + 4$ (4)

Solving (1) to (4) by elimination gives $i = i_1 =$ **8.561 A**.

Chapter 3, Solution 46

For loop 1,

$$-12 + 11i_1 - 8i_2 = 0 \longrightarrow 11i_1 - 8i_2 = 12 \quad (1)$$

For loop 2,

$$-8i_1 + 14i_2 + 2v_o = 0$$

But $v_o = 3i_1$,

$$-8i_1 + 14i_2 + 6i_1 = 0 \longrightarrow i_1 = 7i_2 \quad (2)$$

Substituting (2) into (1),

$$77i_2 - 8i_2 = 12 \longrightarrow i_2 = 0.1739 \text{ A and } i_1 = 7i_2 = 1.217 \text{ A}$$

Chapter 3, Solution 47

First, transform the current sources as shown below.

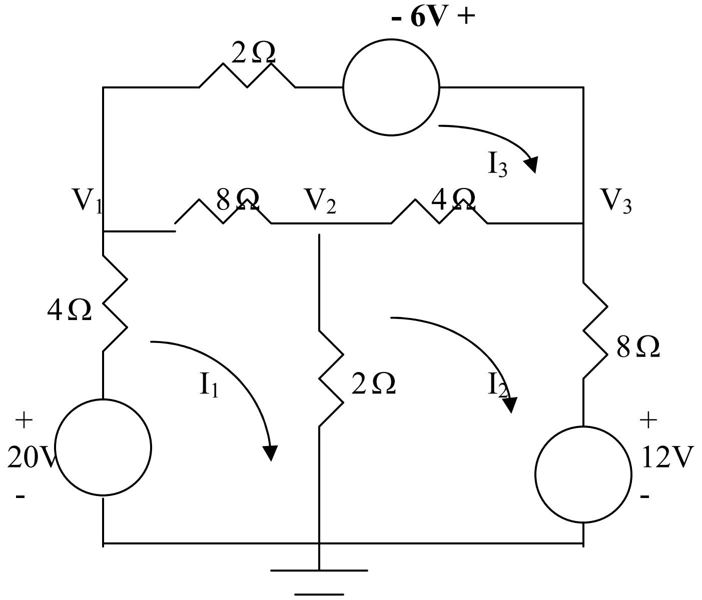

For mesh 1,

$$-20+14I_1-2I_2-8I_3=0 \longrightarrow 10=7I_1-I_2-4I_3 \qquad (1)$$

For mesh 2,

$$12+14I_2-2I_1-4I_3=0 \longrightarrow -6=-I_1+7I_2-2I_3 \qquad (2)$$

For mesh 3,

$$-6+14I_3-4I_2-8I_1=0 \longrightarrow 3=-4I_1-2I_2+7I_3 \qquad (3)$$

Putting (1) to (3) in matrix form, we obtain

$$\begin{pmatrix} 7 & -1 & -4 \\ -1 & 7 & -2 \\ -4 & -2 & 7 \end{pmatrix}\begin{pmatrix} I_1 \\ I_2 \\ I_3 \end{pmatrix}=\begin{pmatrix} 10 \\ -6 \\ 3 \end{pmatrix} \longrightarrow AI=B$$

Using MATLAB,

$$I=A^{-1}B=\begin{bmatrix} 2 \\ 0.0333 \\ 1.8667 \end{bmatrix} \longrightarrow I_1=2.5,\ I_2=0.0333, I_3=1.8667$$

But

$$I_1=\frac{20-V}{4} \longrightarrow V_1=20-4I_1=\underline{10\text{ V}}$$

$$V_2=2(I_1-I_2)=\underline{4.933\text{ V}}$$

Also,

$$I_2=\frac{V_3-12}{8} \longrightarrow V_3=12+8I_2=\underline{12.267\text{V}}$$

Chapter 3, Solution 48

We apply mesh analysis and let the mesh currents be in mA.

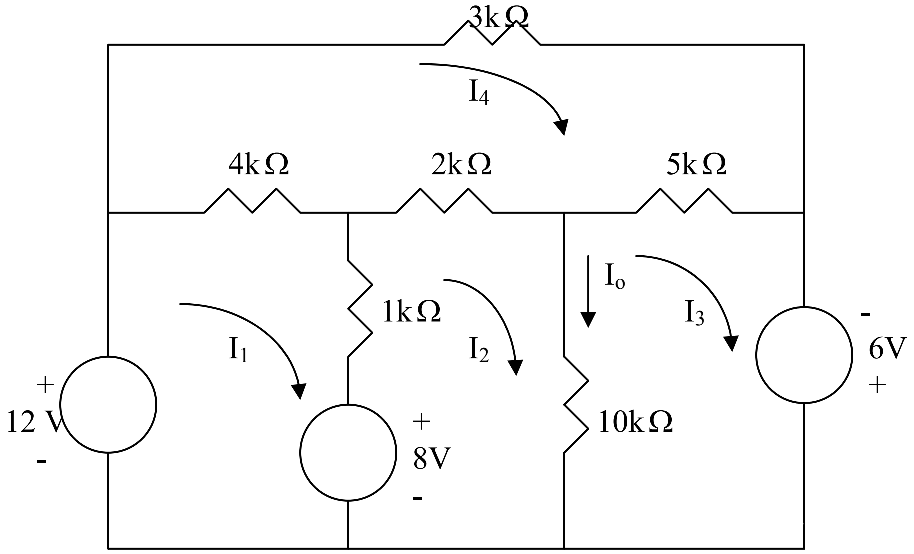

For mesh 1,

$$-12+8+5I_1-I_2-4I_4=0 \longrightarrow 4=5I_1-I_2-4I_4 \qquad (1)$$

For mesh 2,

$$-8+13I_2-I_1-10I_3-2I_4=0 \longrightarrow 8=-I_1+13I_2-10I_3-2I_4 \quad (2)$$

For mesh 3,

$$-6+15I_3-10I_2-5I_4=0 \longrightarrow 6=-10I_2+15I_3-5I_4 \qquad (3)$$

For mesh 4,

$$-4I_1-2I_2-5I_3+14I_4=0 \qquad (4)$$

Putting (1) to (4) in matrix form gives

$$\begin{pmatrix} 5 & -1 & 0 & -4 \\ -1 & 13 & -10 & -2 \\ 0 & -10 & 15 & -5 \\ -4 & -2 & -5 & 14 \end{pmatrix}\begin{pmatrix} I_1 \\ I_2 \\ I_3 \\ I_4 \end{pmatrix}=\begin{pmatrix} 4 \\ 8 \\ 6 \\ 0 \end{pmatrix} \longrightarrow AI=B$$

Using MATLAB,

$$I=A^{-1}B=\begin{pmatrix} 7.217 \\ 8.087 \\ 7.791 \\ 6 \end{pmatrix}$$

The current through the 10kΩ resistor is $I_o = I_2 - I_3$ = <u>0.2957 mA</u>

Chapter 3, Solution 49

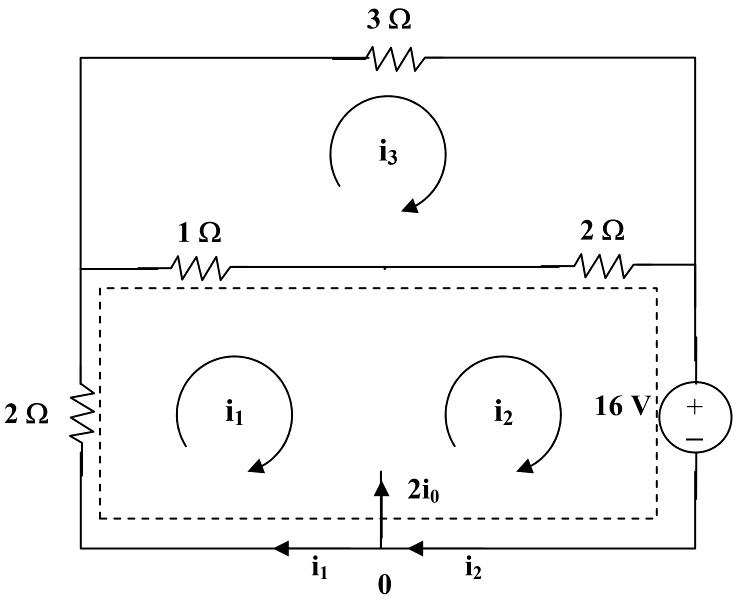

(a)

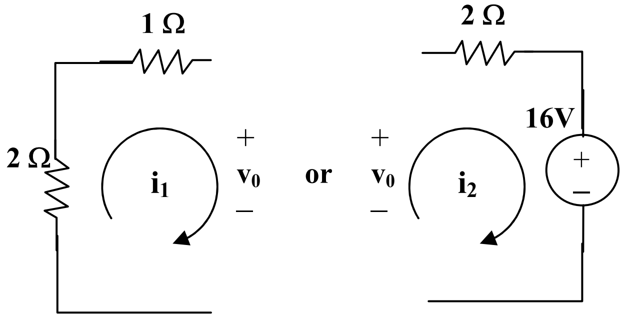

(b)

For the supermesh in figure (a),

$$3i_1 + 2i_2 - 3i_3 + 16 = 0 \qquad (1)$$

At node 0, $i_2 - i_1 = 2i_0$ and $i_0 = -i_1$ which leads to $i_2 = -i_1$ (2)

For loop 3, $-i_1 - 2i_2 + 6i_3 = 0$ which leads to $6i_3 = -i_1$ (3)

Solving (1) to (3), $i_1 = (-32/3)$A, $i_2 = (32/3)$A, $i_3 = (16/9)$A

$i_0 = -i_1 =$ **<u>10.667 A</u>**, from fig. (b), $v_0 = i_3 - 3i_1 = (16/9) + 32 =$ **<u>33.78 V</u>**.

Chapter 3, Solution 50

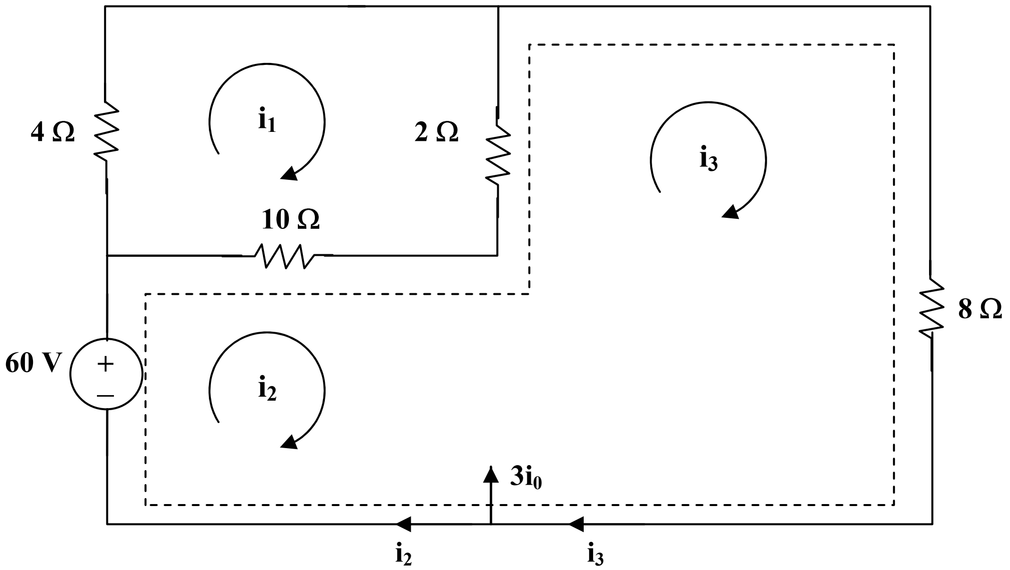

For loop 1, $16i_1 - 10i_2 - 2i_3 = 0$ which leads to $8i_1 - 5i_2 - i_3 = 0$ (1)

For the supermesh, $-60 + 10i_2 - 10i_1 + 10i_3 - 2i_1 = 0$

or $-6i_1 + 5i_2 + 5i_3 = 30$ (2)

Also, $3i_0 = i_3 - i_2$ and $i_0 = i_1$ which leads to $3i_1 = i_3 - i_2$ (3)

Solving (1), (2), and (3), we obtain $i_1 = 1.731$ and $i_0 = i_1 =$ **1.731 A**

Chapter 3, Solution 51

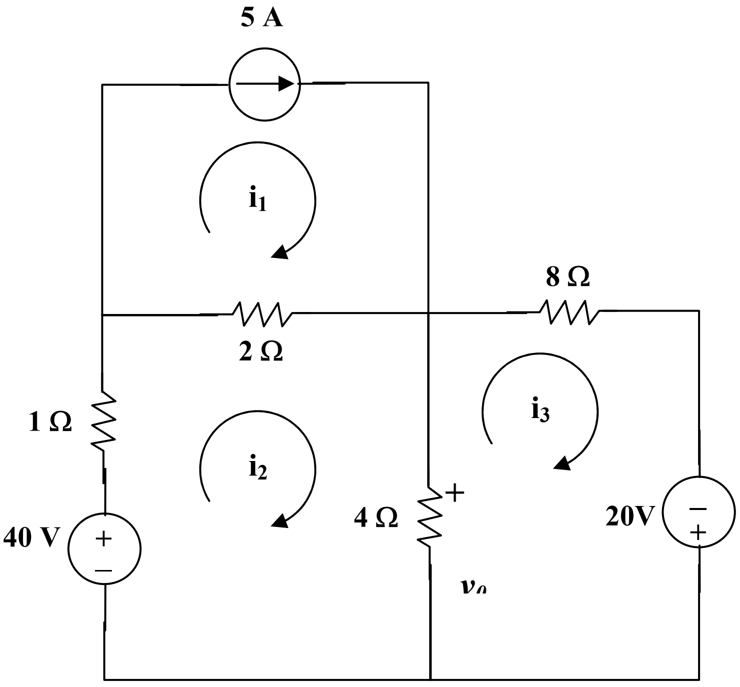

For loop 1, $i_1 = 5A$ (1)

For loop 2, $-40 + 7i_2 - 2i_1 - 4i_3 = 0$ which leads to $50 = 7i_2 - 4i_3$ (2)

For loop 3, $-20 + 12i_3 - 4i_2 = 0$ which leads to $5 = - i_2 + 3\, i_3$ (3)

Solving with (2) and (3), $i_2 = 10$ A, $i_3 = 5$ A

And, $v_0 = 4(i_2 - i_3) = 4(10 - 5) =$ **<u>20 V</u>**.

Chapter 3, Solution 52

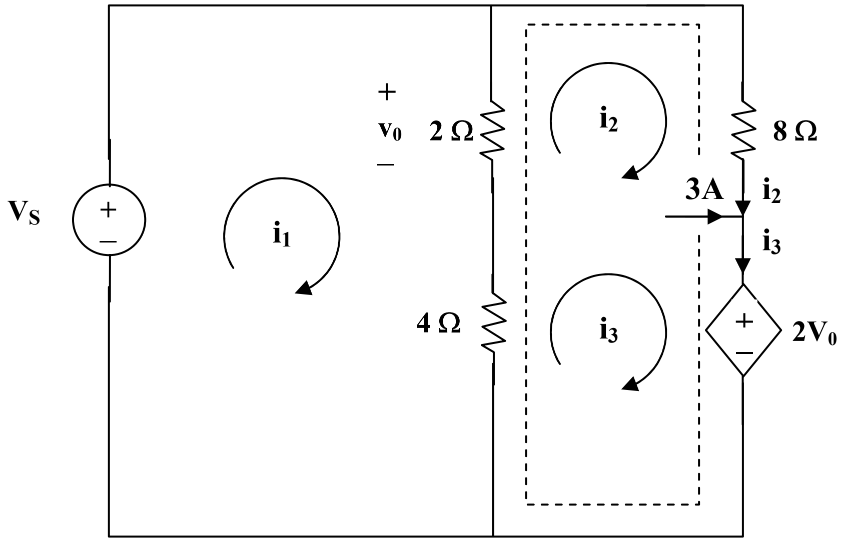

For mesh 1,

$$2(i_1 - i_2) + 4(i_1 - i_3) - 12 = 0 \text{ which leads to } 3i_1 - i_2 - 2i_3 = 6 \quad (1)$$

For the supermesh, $2(i_2 - i_1) + 8i_2 + 2v_0 + 4(i_3 - i_1) = 0$

But $v_0 = 2(i_1 - i_2)$ which leads to $-i_1 + 3i_2 + 2i_3 = 0$ (2)

For the independent current source, $i_3 = 3 + i_2$ (3)

Solving (1), (2), and (3), we obtain,

$i_1 =$ **<u>3.5 A</u>**, $i_2 =$ **<u>-0.5 A</u>**, $i_3 =$ **<u>2.5 A</u>**.

Chapter 3, Solution 53

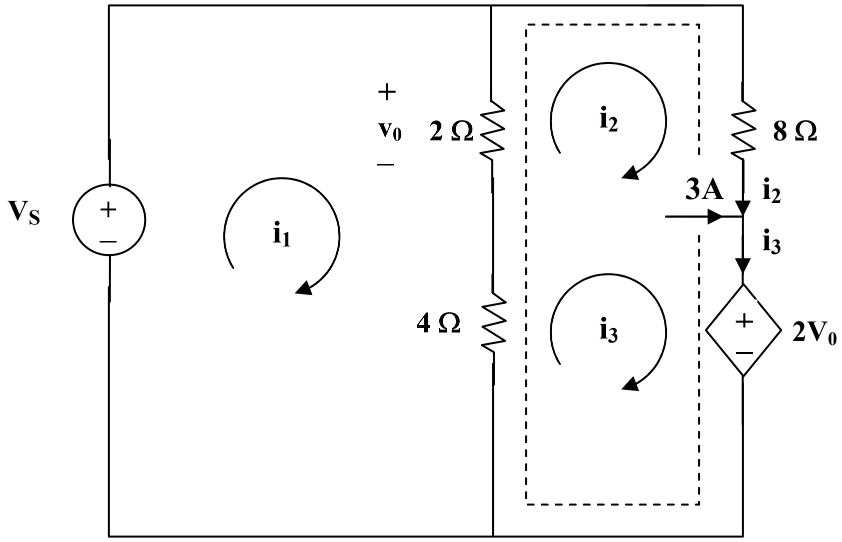

For mesh 1,

$$2(i_1 - i_2) + 4(i_1 - i_3) - 12 = 0 \quad \text{which leads to} \quad 3i_1 - i_2 - 2i_3 = 6 \qquad (1)$$

For the supermesh, $2(i_2 - i_1) + 8i_2 + 2v_0 + 4(i_3 - i_1) = 0$

But $v_0 = 2(i_1 - i_2)$ which leads to $-i_1 + 3i_2 + 2i_3 = 0$ (2)

For the independent current source, $i_3 = 3 + i_2$ (3)

Solving (1), (2), and (3), we obtain,

$i_1 =$ **<u>3.5 A</u>**, $i_2 =$ **<u>-0.5 A</u>**, $i_3 =$ **<u>2.5 A</u>**.

Chapter 3, Solution 54

Let the mesh currents be in mA. For mesh 1,

$$-12 + 10 + 2I_1 - I_2 = 0 \longrightarrow 2 = 2I_1 - I_2 \qquad (1)$$

For mesh 2,

$$-10 + 3I_2 - I_1 - I_3 = 0 \longrightarrow 10 = -I_1 + 3I_2 - I_3 \qquad (2)$$

For mesh 3,

$$-12 + 2I_3 - I_2 = 0 \longrightarrow 12 = -I_2 + 2I_3 \qquad (3)$$

Putting (1) to (3) in matrix form leads to

$$\begin{pmatrix} 2 & -1 & 0 \\ -1 & 3 & -1 \\ 0 & -1 & 2 \end{pmatrix}\begin{pmatrix} I_1 \\ I_2 \\ I_3 \end{pmatrix} = \begin{pmatrix} 2 \\ 10 \\ 12 \end{pmatrix} \longrightarrow AI = B$$

Using MATLAB,

$$I = A^{-1}B = \begin{bmatrix} 5.25 \\ 8.5 \\ 10.25 \end{bmatrix} \longrightarrow \underline{I_1 = 5.25\,\text{mA},\ I_2 = 8.5\,\text{mA}, I_3 = 10.25\,\text{mA}}$$

Chapter 3, Solution 55

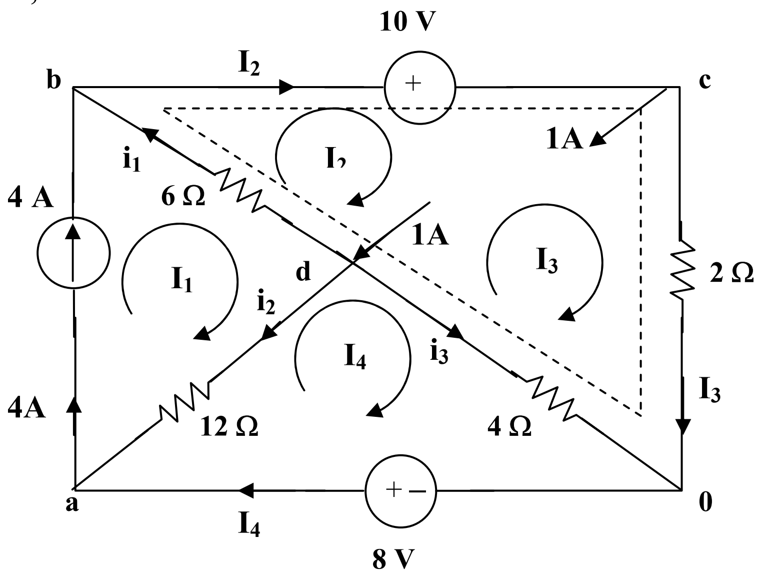

It is evident that $I_1 = 4$ (1)

For mesh 4, $12(I_4 - I_1) + 4(I_4 - I_3) - 8 = 0$ (2)

For the supermesh $6(I_2 - I_1) + 10 + 2I_3 + 4(I_3 - I_4) = 0$
or $-3I_1 + 3I_2 + 3I_3 - 2I_4 = -5$ (3)

At node c, $I_2 = I_3 + 1$ (4)

Solving (1), (2), (3), and (4) yields, $I_1 = 4A$, $I_2 = 3A$, $I_3 = 2A$, and $I_4 = 4A$

At node b, $i_1 = I_2 - I_1 =$ **<u>-1A</u>**

At node a, $i_2 = 4 - I_4 =$ **<u>0A</u>**

At node 0, $i_3 = I_4 - I_3 =$ **<u>2A</u>**

Chapter 3, Solution 56

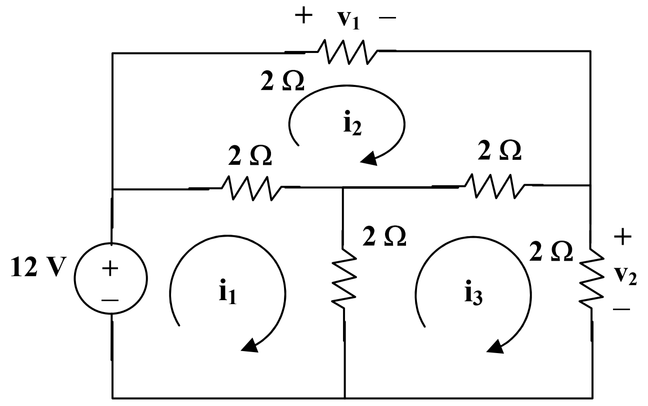

For loop 1, $12 = 4i_1 - 2i_2 - 2i_3$ which leads to $6 = 2i_1 - i_2 - i_3$ (1)

For loop 2, $0 = 6i_2 - 2i_1 - 2i_3$ which leads to $0 = -i_1 + 3i_2 - i_3$ (2)

For loop 3, $0 = 6i_3 - 2i_1 - 2i_2$ which leads to $0 = -i_1 - i_2 + 3i_3$ (3)

In matrix form (1), (2), and (3) become,

$$\begin{bmatrix} 2 & -1 & -1 \\ -1 & 3 & -1 \\ -1 & -1 & 3 \end{bmatrix}\begin{bmatrix} i_1 \\ i_2 \\ i_3 \end{bmatrix} = \begin{bmatrix} 6 \\ 0 \\ 0 \end{bmatrix}$$

$$\Delta = \begin{vmatrix} 2 & -1 & -1 \\ -1 & 3 & -1 \\ -1 & -1 & 3 \end{vmatrix} = 8, \quad \Delta_2 = \begin{vmatrix} 2 & 6 & -1 \\ -1 & 3 & -1 \\ -1 & 0 & 3 \end{vmatrix} = 24$$

$$\Delta_3 = \begin{vmatrix} 2 & -1 & 6 \\ -1 & 3 & 0 \\ -1 & -1 & 0 \end{vmatrix} = 24 \text{, therefore } i_2 = i_3 = 24/8 = 3\text{A},$$

$v_1 = 2i_2 =$ **6 volts**, $v = 2i_3 =$ **6 volts**

Chapter 3, Solution 57

Assume R is in kilo-ohms.

$V_2 = 4k\Omega x 18mA = \underline{72V}$, $\quad V_1 = 100 - V_2 = 100 - 72 = \underline{28V}$

Current through R is

$$i_R = \frac{3}{3+R} i_{o,} \qquad V_1 = i_R R \quad \longrightarrow \quad 28 = \frac{3}{3+R}(18)R$$

This leads to R = 84/26 = $\underline{3.23\ k\Omega}$

Chapter 3, Solution 58

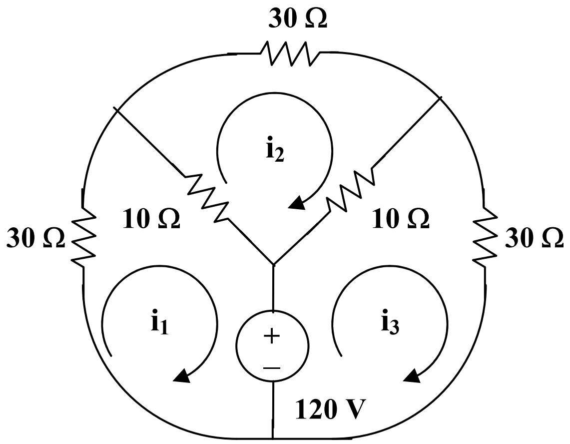

For loop 1, $120 + 40i_1 – 10i_2 = 0$, which leads to $-12 = 4i_1 – i_2$ (1)

For loop 2, $50i_2 – 10i_1 – 10i_3 = 0$, which leads to $-i_1 + 5i_2 – i_3 = 0$ (2)

For loop 3, $-120 – 10i_2 + 40i_3 = 0$, which leads to $12 = -i_2 + 4i_3$ (3)

Solving (1), (2), and (3), we get, i_1 = **-3A**, i_2 = **0**, and i_3 = **3A**

Chapter 3, Solution 59

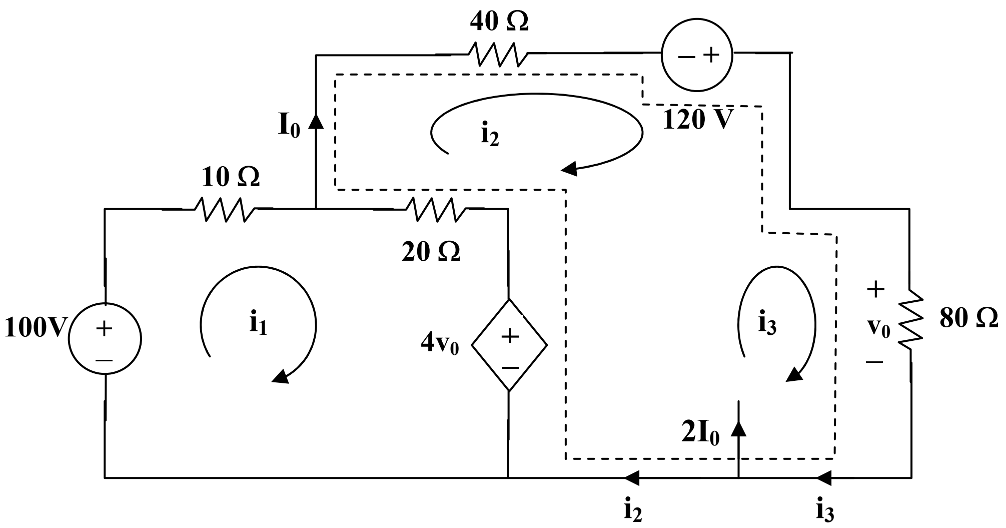

For loop 1, $-100 + 30i_1 – 20i_2 + 4v_0 = 0$, where $v_0 = 80i_3$
or $5 = 1.5i_1 – i_2 + 16i_3$ (1)

For the supermesh, $60i_2 – 20i_1 – 120 + 80i_3 – 4 v_0 = 0$, where $v_0 = 80i_3$
or $6 = -i_1 + 3i_2 – 12i_3$ (2)

Also, $2I_0 = i_3 – i_2$ and $I_0 = i_2$, hence, $3i_2 = i_3$ (3)

From (1), (2), and (3),
$$\begin{bmatrix} 3 & -2 & 32 \\ -1 & 3 & -12 \\ 0 & 3 & -1 \end{bmatrix} \begin{bmatrix} i_1 \\ i_2 \\ i_3 \end{bmatrix} = \begin{bmatrix} 10 \\ 6 \\ 0 \end{bmatrix}$$

$$\Delta = \begin{vmatrix} 3 & -2 & 32 \\ -1 & 3 & -12 \\ 0 & 3 & -1 \end{vmatrix} = 5,\ \Delta_2 = \begin{vmatrix} 3 & 10 & 32 \\ -1 & 6 & -12 \\ 0 & 0 & -1 \end{vmatrix} = -28,\ \Delta_3 = \begin{vmatrix} 3 & -2 & 10 \\ -1 & 3 & 6 \\ 0 & 3 & 0 \end{vmatrix} = -84$$

$I_0 = i_2 = \Delta_2/\Delta = -28/5 =$ **-5.6 A**

$v_0 = 8i_3 = (-84/5)80 =$ **-1344 volts**

Chapter 3, Solution 60

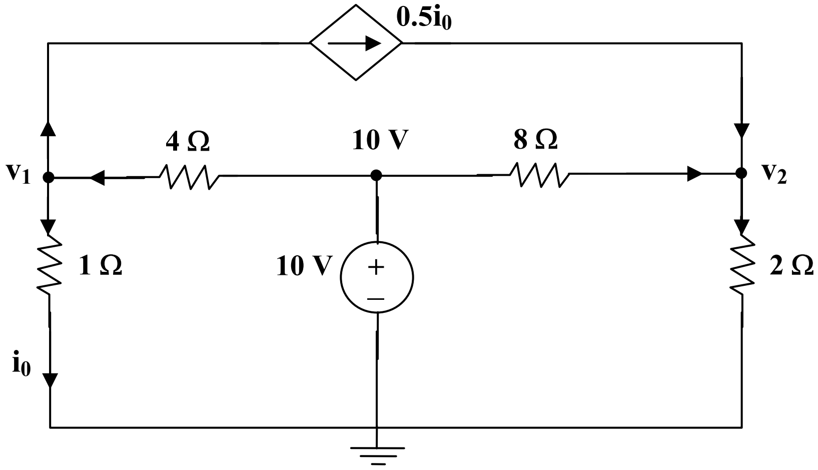

At node 1, $(v_1/1) + (0.5v_1/1) = (10 - v_1)/4$, which leads to $v_1 = 10/7$

At node 2, $(0.5v_1/1) + ((10 - v_2)/8) = v_2/2$ which leads to $v_2 = 22/7$

$P_{1\Omega} = (v_1)^2/1 =$ **<u>2.041 watts</u>**, $P_{2\Omega} = (v_2)^2/2 =$ **<u>4.939 watts</u>**

$P_{4\Omega} = (10 - v_1)^2/4 =$ **<u>18.38 watts</u>**, $P_{8\Omega} = (10 - v_2)^2/8 =$ **<u>5.88 watts</u>**

Chapter 3, Solution 61

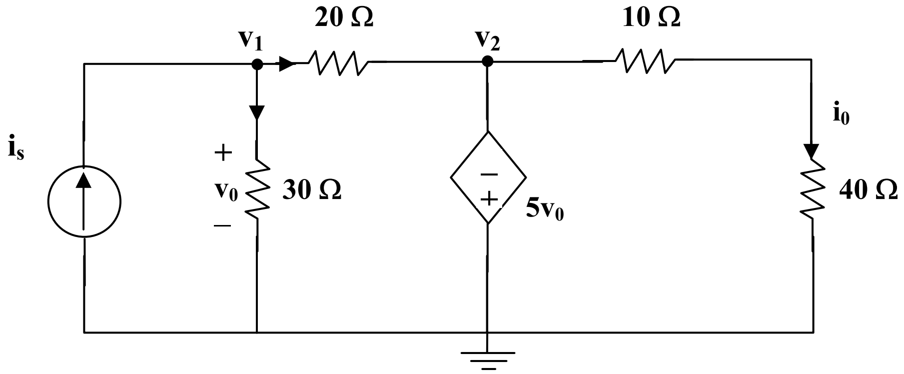

At node 1, $i_s = (v_1/30) + ((v_1 - v_2)/20)$ which leads to $60i_s = 5v_1 - 3v_2$ (1)

But $v_2 = -5v_0$ and $v_0 = v_1$ which leads to $v_2 = -5v_1$

Hence, $60i_s = 5v_1 + 15v_1 = 20v_1$ which leads to $v_1 = 3i_s$, $v_2 = -15i_s$

$i_0 = v_2/50 = -15i_s/50$ which leads to $i_0/i_s = -15/50 =$ **<u>-0.3</u>**

Chapter 3, Solution 62

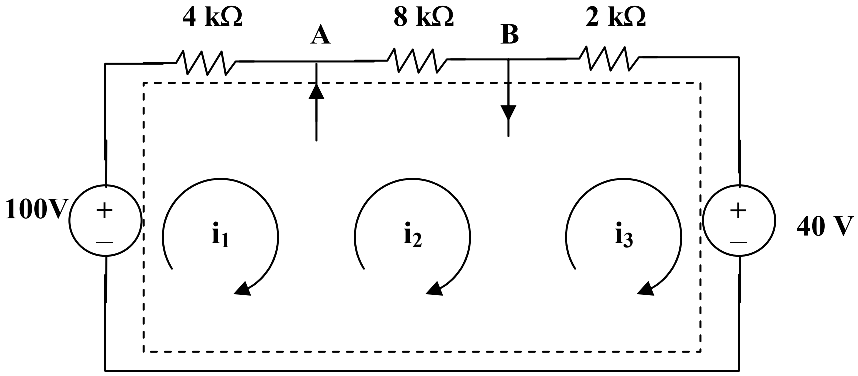

We have a supermesh. Let all R be in kΩ, i in mA, and v in volts.

For the supermesh, $-100 + 4i_1 + 8i_2 + 2i_3 + 40 = 0$ or $30 = 2i_1 + 4i_2 + i_3$ (1)

At node A, $i_1 + 4 = i_2$ (2)

At node B, $i_2 = 2i_1 + i_3$ (3)

Solving (1), (2), and (3), we get i_1 = **2 mA**, i_2 = **6 mA**, and i_3 = **2 mA**.

Chapter 3, Solution 63

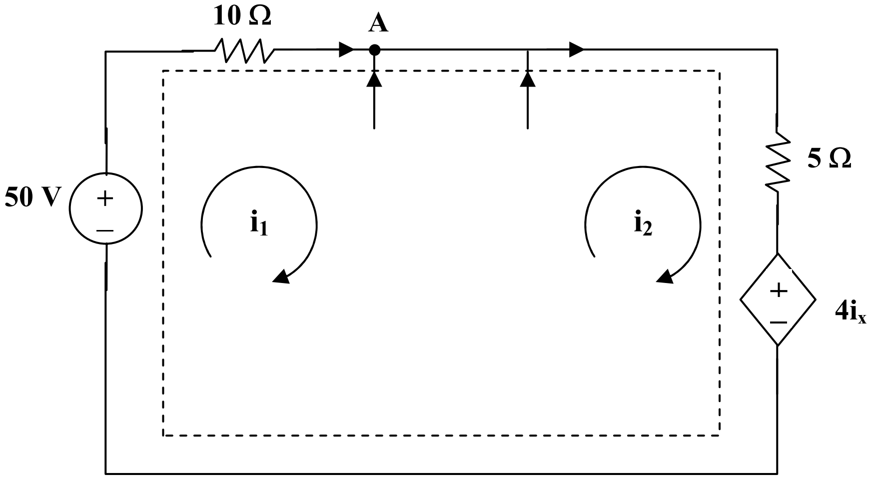

For the supermesh, $-50 + 10i_1 + 5i_2 + 4i_x = 0$, but $i_x = i_1$. Hence,

$$50 = 14i_1 + 5i_2 \quad (1)$$

At node A, $i_1 + 3 + (v_x/4) = i_2$, but $v_x = 2(i_1 - i_2)$, hence, $i_1 + 2 = i_2$ (2)

Solving (1) and (2) gives $i_1 = 2.105$ A and $i_2 = 4.105$ A

$v_x = 2(i_1 - i_2) =$ **-4 volts** and $i_x = i_2 - 2 =$ **4.105 amp**

Chapter 3, Solution 64

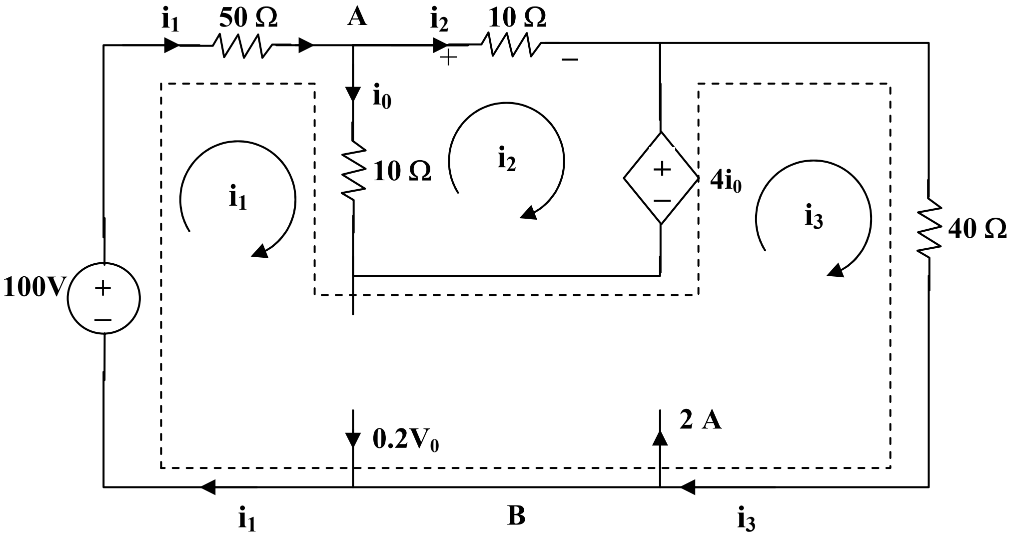

For mesh 2, $20i_2 - 10i_1 + 4i_0 = 0$ (1)

But at node A, $i_o = i_1 - i_2$ so that (1) becomes $i_1 = (7/12)i_2$ (2)

For the supermesh, $-100 + 50i_1 + 10(i_1 - i_2) - 4i_0 + 40i_3 = 0$

or $50 = 28i_1 - 3i_2 + 20i_3$ (3)

At node B, $i_3 + 0.2v_0 = 2 + i_1$ (4)

But, $v_0 = 10i_2$ so that (4) becomes $i_3 = 2 - (17/12)i_2$ (5)

Solving (1) to (5), $i_2 = -0.674$,

$v_0 = 10i_2 =$ **<u>-6.74 volts</u>**, $i_0 = i_1 - i_2 = -(5/12)i_2 =$ **<u>0.281 amps</u>**

Chapter 3, Solution 65

For mesh 1, $12 = 12I_1 - 6I_2 - I_4$ (1)

For mesh 2, $0 = -6I_1 + 16I_2 - 8I_3 - I_4 - I_5$ (2)

For mesh 3, $9 = -8I_2 + 15I_3 - I_5$ (3)

For mesh 4, $6 = -I_1 - I_2 + 5I_4 - 2I_5$ (4)

For mesh 5, $10 = -I_2 - I_3 - 2I_4 + 8I_5$ (5)

Casting (1) to (5) in matrix form gives

$$\begin{pmatrix} 12 & -6 & 0 & 1 & 0 \\ -6 & 16 & -8 & -1 & -1 \\ 0 & -8 & 15 & 0 & -1 \\ -1 & -1 & 0 & 5 & -2 \\ 0 & -1 & -1 & -2 & 8 \end{pmatrix} \begin{pmatrix} I_1 \\ I_2 \\ I_3 \\ I_4 \\ I_5 \end{pmatrix} = \begin{pmatrix} 12 \\ 0 \\ 9 \\ 6 \\ 10 \end{pmatrix} \quad \longrightarrow \quad AI = B$$

Using MATLAB leads to

$$I = A^{-1}B = \begin{pmatrix} 1.673 \\ 1.824 \\ 1.733 \\ 2.864 \\ 2.411 \end{pmatrix}$$

Thus,

$$\underline{I_1 = 1.673\text{ A}, I_2 = 1.824\text{ A}, I_3 = 1.733\text{ A}, I_4 = 1.864\text{ A}, I_5 = 2.411\text{ A}}$$

Chapter 3, Solution 66

Consider the circuit below.

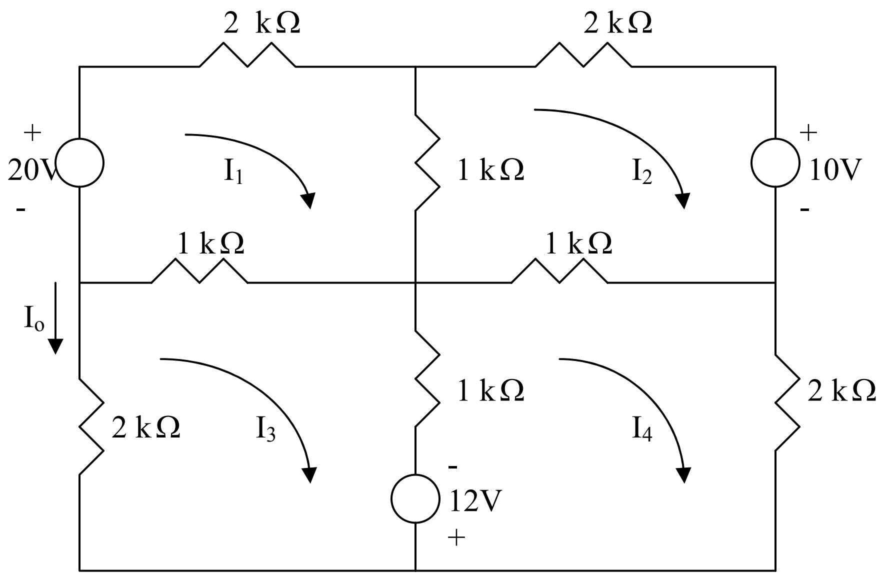

We use mesh analysis. Let the mesh currents be in mA.

For mesh 1, $20 = 4I_1 - I_2 - I_3$ (1)

For mesh 2, $-10 = -I_1 + 4I_2 - I_4$ (2)

For mesh 3, $12 = -I_1 + 4I_3 - I_4$ (3)

For mesh 4, $-12 = -I_2 - I_3 + 4I_4$ (4)

In matrix form, (1) to (4) become

$$\begin{pmatrix} 4 & -1 & -1 & 0 \\ -1 & 4 & 0 & -1 \\ -1 & 0 & 4 & -1 \\ 0 & -1 & -1 & 4 \end{pmatrix}\begin{pmatrix} I_1 \\ I_2 \\ I_3 \\ I_4 \end{pmatrix} = \begin{pmatrix} 20 \\ -10 \\ 12 \\ -12 \end{pmatrix} \longrightarrow \quad AI = B$$

Using MATLAB,

$$I = A^{-1}B = \begin{pmatrix} 5.5 \\ -1.75 \\ 3.75 \\ -2.5 \end{pmatrix}$$

Thus,

$$I_o = -I_3 = \underline{-3.75\,\text{mA}}$$

Chapter 3, Solution 67

$G_{11} = (1/1) + (1/4) = 1.25$, $G_{22} = (1/1) + (1/2) = 1.5$

$G_{12} = -1 = G_{21}$, $i_1 = 6 – 3 = 3$, $i_2 = 5\text{-}6 = -1$

Hence, we have, $\begin{bmatrix} 1.25 & -1 \\ -1 & 1.5 \end{bmatrix}\begin{bmatrix} v_1 \\ v_2 \end{bmatrix} = \begin{bmatrix} 3 \\ -1 \end{bmatrix}$

$$\begin{bmatrix} 1.25 & -1 \\ -1 & 1.5 \end{bmatrix}^{-1} = \frac{1}{\Delta}\begin{bmatrix} 1.5 & 1 \\ 1 & 1.25 \end{bmatrix}$$, where $\Delta = [(1.25)(1.5)\text{-}(-1)(-1)] = 0.875$

$$\begin{bmatrix} v_1 \\ v_2 \end{bmatrix} = \begin{bmatrix} 1.7143 & 1.1429 \\ 1.1429 & 1.4286 \end{bmatrix}\begin{bmatrix} 3 \\ -1 \end{bmatrix} = \begin{bmatrix} 3(1.7143) - 1(1.1429) \\ 3(1.1429) - 1(1.4286) \end{bmatrix} = \begin{bmatrix} 4 \\ 2 \end{bmatrix}$$

Clearly v_1 = **4 volts** and v_2 = **2 volts**

Chapter 3, Solution 68

By inspection, $G_{11} = 1 + 3 + 5 = 8S$, $G_{22} = 1 + 2 = 3S$, $G_{33} = 2 + 5 = 7S$

$G_{12} = -1$, $G_{13} = -5$, $G_{21} = -1$, $G_{23} = -2$, $G_{31} = -5$, $G_{32} = -2$

$i_1 = 4$, $i_2 = 2$, $i_3 = -1$

We can either use matrix inverse as we did in Problem 3.51 or use Cramer's Rule. Let us use Cramer's rule for this problem.

First, we develop the matrix relationships.

$$\begin{bmatrix} 8 & -1 & -5 \\ -1 & 3 & -2 \\ -5 & -2 & 7 \end{bmatrix} \begin{bmatrix} v_1 \\ v_2 \\ v_3 \end{bmatrix} = \begin{bmatrix} 4 \\ 2 \\ -1 \end{bmatrix}$$

$$\Delta = \begin{vmatrix} 8 & -1 & -5 \\ -1 & 3 & -2 \\ -5 & -2 & 7 \end{vmatrix} = 34, \Delta_1 = \begin{vmatrix} 4 & -1 & -5 \\ 2 & 3 & -2 \\ -1 & -2 & 7 \end{vmatrix} = 85$$

$$\Delta_2 = \begin{vmatrix} 8 & 4 & -5 \\ -1 & 2 & -2 \\ -5 & -1 & 7 \end{vmatrix} = 109, \Delta_3 = \begin{vmatrix} 8 & -1 & 4 \\ -1 & 3 & 2 \\ -5 & -2 & -1 \end{vmatrix} = 87$$

$v_1 = \Delta_1/\Delta = 85/34 =$ **3.5 volts**, $v_2 = \Delta_2/\Delta = 109/34 =$ **3.206 volts**

$v_3 = \Delta_3/\Delta = 87/34 =$ **2.56 volts**

Chapter 3, Solution 69

Assume that all conductances are in mS, all currents are in mA, and all voltages are in volts.

G_{11} = (1/2) + (1/4) + (1/1) = 1.75, G_{22} = (1/4) + (1/4) + (1/2) = 1,
G_{33} = (1/1) + (1/4) = 1.25, G_{12} = -1/4 = -0.25, G_{13} = -1/1 = -1,
G_{21} = -0.25, G_{23} = -1/4 = -0.25, G_{31} = -1, G_{32} = -0.25

i_1 = 20, i_2 = 5, and i_3 = 10 – 5 = 5

The node-voltage equations are:

$$\begin{bmatrix} 1.75 & -0.25 & -1 \\ -0.25 & 1 & -0.25 \\ -1 & -0.25 & 1.25 \end{bmatrix} \begin{bmatrix} v_1 \\ v_2 \\ v_3 \end{bmatrix} = \begin{bmatrix} 20 \\ 5 \\ 5 \end{bmatrix}$$

Chapter 3, Solution 70

$G_{11} = G_1 + G_2 + G_4$, $G_{12} = -G_2$, $G_{13} = 0$,
$G_{22} = G_2 + G_3$, $G_{21} = -G_2$, $G_{23} = -G_3$,
$G_{33} = G_1 + G_3 + G_5$, $G_{31} = 0$, $G_{32} = -G_3$

$i_1 = -I_1$, $i_2 = I_2$, and $i_3 = I_1$

Then, the node-voltage equations are:

$$\begin{bmatrix} G_1 + G_2 + G_4 & -G_2 & 0 \\ -G_2 & G_1 + G_2 & -G_3 \\ 0 & -G_3 & G_1 + G_3 + G_5 \end{bmatrix} \begin{bmatrix} v_1 \\ v_2 \\ v_3 \end{bmatrix} = \begin{bmatrix} -I_1 \\ I_2 \\ I_1 \end{bmatrix}$$

Chapter 3, Solution 71

$R_{11} = 4 + 2 = 6$, $R_{22} = 2 + 8 + 2 = 12$, $R_{33} = 2 + 5 = 7$,
$R_{12} = -2$, $R_{13} = 0$, $R_{21} = -2$, $R_{23} = -2$, $R_{31} = 0$, $R_{32} = -2$

$v_1 = 12$, $v_2 = -8$, and $v_3 = -20$

Now we can write the matrix relationships for the mesh-current equations.

$$\begin{bmatrix} 6 & -2 & 0 \\ -2 & 12 & -2 \\ 0 & -2 & 7 \end{bmatrix} \begin{bmatrix} i_1 \\ i_2 \\ i_3 \end{bmatrix} = \begin{bmatrix} 12 \\ -8 \\ -20 \end{bmatrix}$$

Now we can solve for i_2 using Cramer's Rule.

$$\Delta = \begin{vmatrix} 6 & -2 & 0 \\ -2 & 12 & -2 \\ 0 & -2 & 7 \end{vmatrix} = 452, \Delta_2 = \begin{vmatrix} 6 & 12 & 0 \\ -2 & -8 & -2 \\ 0 & -20 & 7 \end{vmatrix} = -408$$

$i_2 = \Delta_2/\Delta = -0.9026$, $p = (i_2)^2 R =$ **<u>6.52 watts</u>**

Chapter 3, Solution 72

$R_{11} = 5 + 2 = 7$, $R_{22} = 2 + 4 = 6$, $R_{33} = 1 + 4 = 5$, $R_{44} = 1 + 4 = 5$,
$R_{12} = -2$, $R_{13} = 0 = R_{14}$, $R_{21} = -2$, $R_{23} = -4$, $R_{24} = 0$, $R_{31} = 0$,
$R_{32} = -4$, $R_{34} = -1$, $R_{41} = 0 = R_{42}$, $R_{43} = -1$, we note that $R_{ij} = R_{ji}$ for all i not equal to j.

$v_1 = 8$, $v_2 = 4$, $v_3 = -10$, and $v_4 = -4$

Hence the mesh-current equations are:

$$\begin{bmatrix} 7 & -2 & 0 & 0 \\ -2 & 6 & -4 & 0 \\ 0 & -4 & 5 & -1 \\ 0 & 0 & -1 & 5 \end{bmatrix} \begin{bmatrix} i_1 \\ i_2 \\ i_3 \\ i_4 \end{bmatrix} = \begin{bmatrix} 8 \\ 4 \\ -10 \\ -4 \end{bmatrix}$$

Chapter 3, Solution 73

$R_{11} = 2 + 3 + 4 = 9$, $R_{22} = 3 + 5 = 8$, $R_{33} = 1 + 4 = 5$, $R_{44} = 1 + 1 = 2$,
$R_{12} = -3$, $R_{13} = -4$, $R_{14} = 0$, $R_{23} = 0$, $R_{24} = 0$, $R_{34} = -1$

$v_1 = 6$, $v_2 = 4$, $v_3 = 2$, and $v_4 = -3$

Hence,

$$\begin{bmatrix} 9 & -3 & -4 & 0 \\ -3 & 8 & 0 & 0 \\ -4 & 0 & 6 & -1 \\ 0 & 0 & -1 & 2 \end{bmatrix}\begin{bmatrix} i_1 \\ i_2 \\ i_3 \\ i_4 \end{bmatrix} = \begin{bmatrix} 6 \\ 4 \\ 2 \\ -3 \end{bmatrix}$$

Chapter 3, Solution 74

$R_{11} = R_1 + R_4 + R_6$, $R_{22} = R_2 + R_4 + R_5$, $R_{33} = R_6 + R_7 + R_8$,
$R_{44} = R_3 + R_5 + R_8$, $R_{12} = -R_4$, $R_{13} = -R_6$, $R_{14} = 0$, $R_{23} = 0$,
$R_{24} = -R_5$, $R_{34} = -R_8$, again, we note that $R_{ij} = R_{ji}$ for all i not equal to j.

The input voltage vector is = $\begin{bmatrix} V_1 \\ -V_2 \\ V_3 \\ -V_4 \end{bmatrix}$

$$\begin{bmatrix} R_1 + R_4 + R_6 & -R_4 & -R_6 & 0 \\ -R_4 & R_2 + R_4 + R_5 & 0 & -R_5 \\ -R_6 & 0 & R_6 + R_7 + R_8 & -R_8 \\ 0 & -R_5 & -R_8 & R_3 + R_5 + R_8 \end{bmatrix}\begin{bmatrix} i_1 \\ i_2 \\ i_3 \\ i_4 \end{bmatrix} = \begin{bmatrix} V_1 \\ -V_2 \\ V_3 \\ -V_4 \end{bmatrix}$$

Chapter 3, Solution 75

```
* Schematics Netlist *

R_R4          $N_0002 $N_0001  30
R_R2          $N_0001 $N_0003  10
R_R1          $N_0005 $N_0004  30
R_R3          $N_0003 $N_0004  10
R_R5          $N_0006 $N_0004  30
V_V4          $N_0003 0 120V
v_V3          $N_0005 $N_0001 0
v_V2          0 $N_0006 0
v_V1          0 $N_0002 0
```

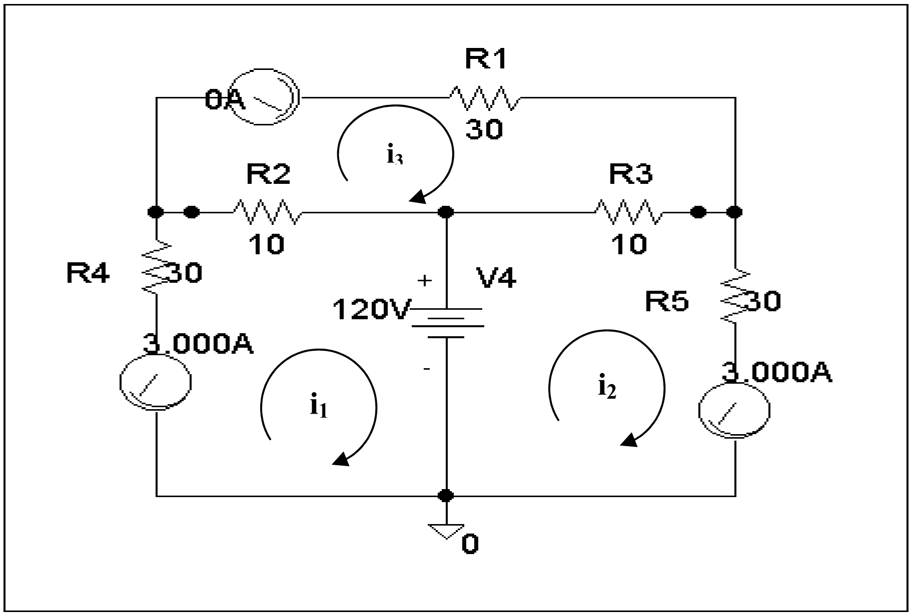

Clearly, i_1 = **<u>-3 amps</u>**, i_2 = **<u>0 amps</u>**, and i_3 = **<u>3 amps</u>**, which agrees with the answers in Problem 3.44.

Chapter 3, Solution 76

```
* Schematics Netlist *

I_I2          0 $N_0001 DC 4A
R_R1          $N_0002 $N_0001  0.25
R_R3          $N_0003 $N_0001  1
R_R2          $N_0002 $N_0003  1
F_F1          $N_0002 $N_0001 VF_F1 3
VF_F1         $N_0003 $N_0004 0V
R_R4          0 $N_0002  0.5
R_R6          0 $N_0001  0.5
I_I1          0 $N_0002 DC 2A
R_R5          0 $N_0004  0.25
```

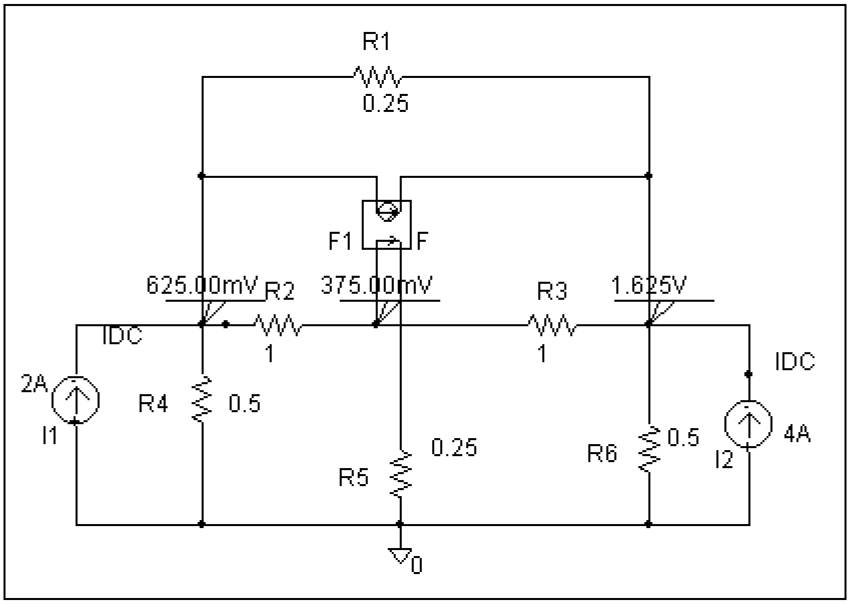

Clearly, v_1 = **<u>625 mVolts</u>**, v_2 = **<u>375 mVolts</u>**, and v_3 = **<u>1.625 volts</u>**, which agrees with the solution obtained in Problem 3.27.

Chapter 3, Solution 77

```
* Schematics Netlist *

R_R2          0 $N_0001  4
I_I1          $N_0001 0 DC 3A
I_I3          $N_0002 $N_0001 DC 6A
R_R3          0 $N_0002  2
R_R1          $N_0001 $N_0002  1
I_I2          0 $N_0002 DC 5A
```

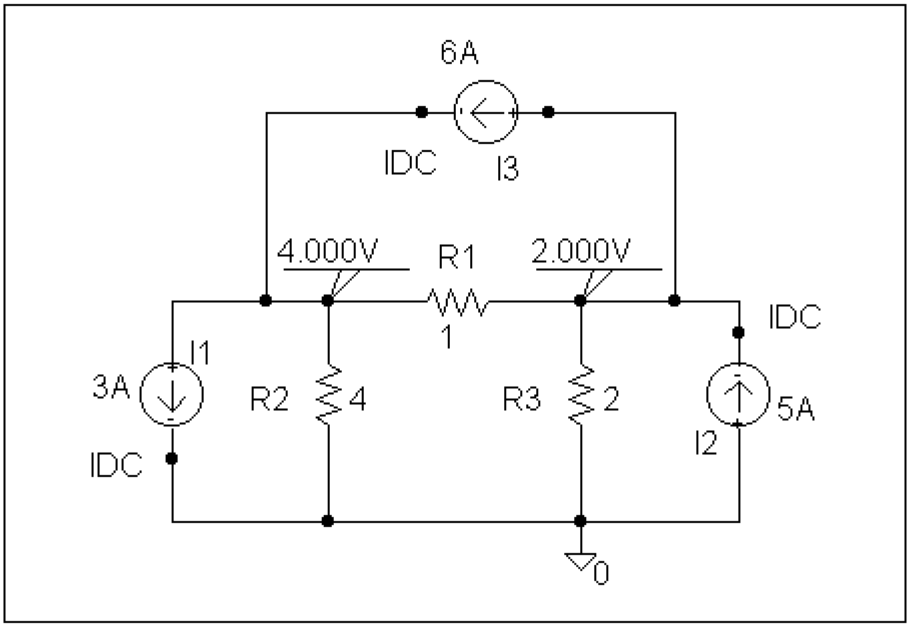

Clearly, v_1 = **4 volts** and v_2 = **2 volts**, which agrees with the answer obtained in Problem 3.51.

Chapter 3, Solution 78

The schematic is shown below. When the circuit is saved and simulated the node voltages are displaced on the pseudocomponents as shown. Thus,

$\underline{V_1 = -3\text{V}, \quad V_2 = 4.5\text{V}, V_3 = -15\text{V},}$

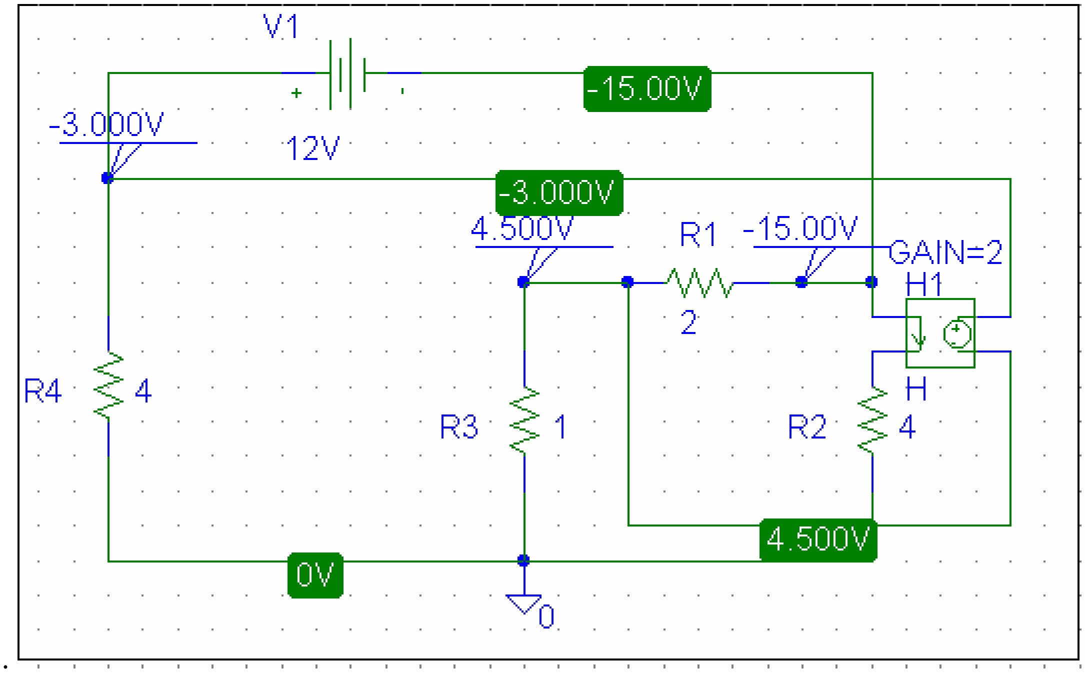

Chapter 3, Solution 79

The schematic is shown below. When the circuit is saved and simulated, we obtain the node voltages as displaced. Thus,

$$\underline{V_a = -5.278\text{ V},\ \ V_b = 10.28\text{ V},\ \ V_c = 0.6944\text{ V},\ \ V_d = -26.88\text{ V}}$$

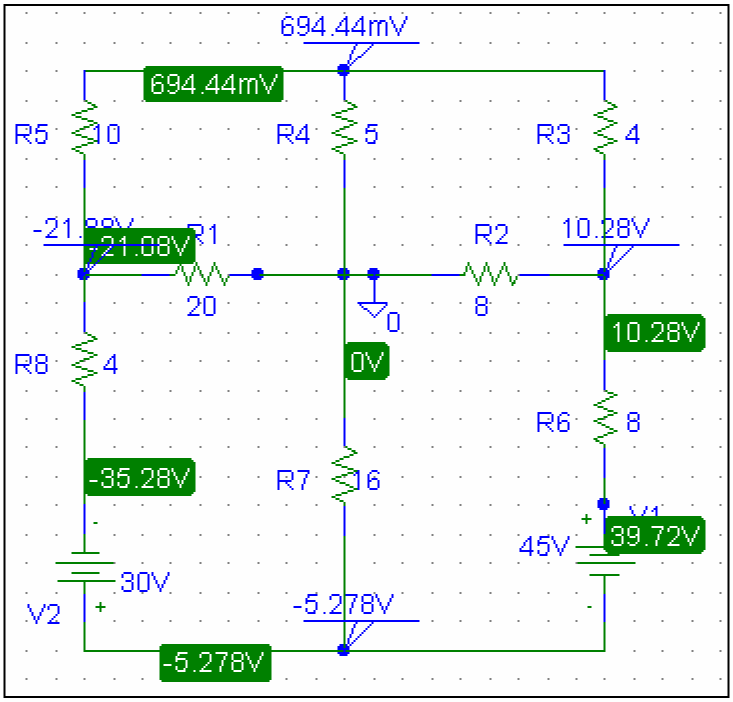

Chapter 3, Solution 80

```
* Schematics Netlist *

H_H1         $N_0002 $N_0003 VH_H1 6
VH_H1        0 $N_0001 0V
I_I1         $N_0004 $N_0005 DC 8A
V_V1         $N_0002 0 20V
R_R4         0 $N_0003  4
R_R1         $N_0005 $N_0003  10
R_R2         $N_0003 $N_0002  12
R_R5         0 $N_0004  1
R_R3         $N_0004 $N_0001  2
```

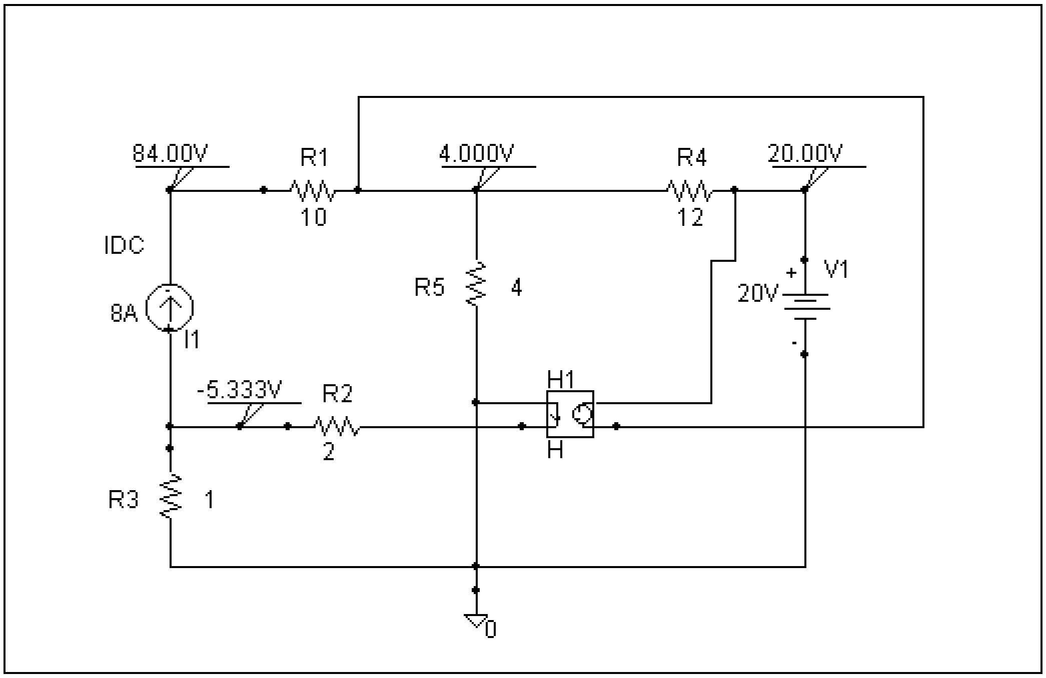

Clearly, v_1 = **84 volts**, v_2 = **4 volts**, v_3 = **20 volts**, and v_4 = **-5.333 volts**

Chapter 3, Solution 81

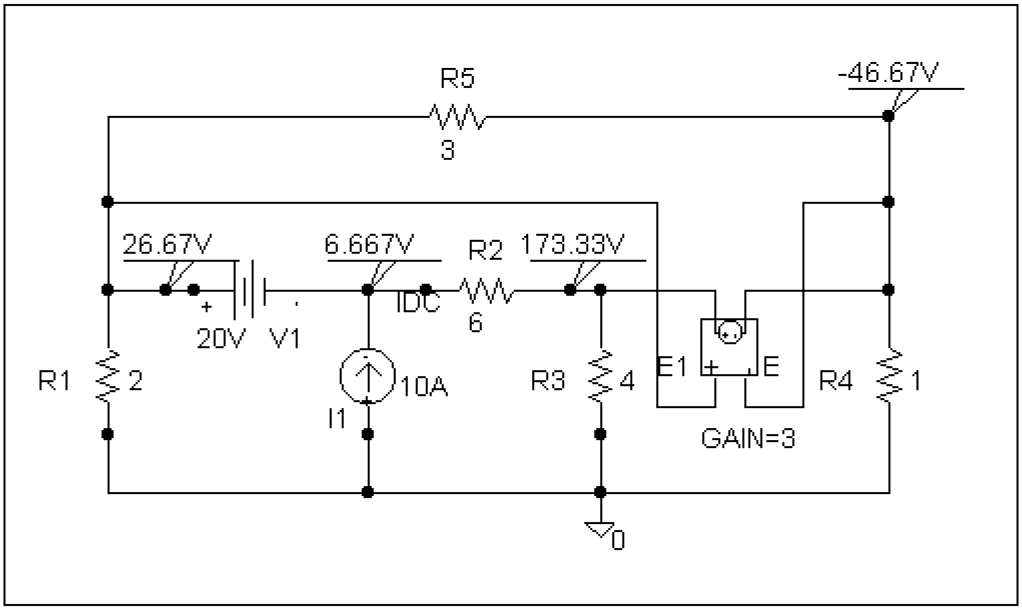

Clearly, v_1 = **26.67 volts**, v_2 = **6.667 volts**, v_3 = **173.33 volts**, and v_4 = **-46.67 volts** which agrees with the results of Example 3.4.

This is the netlist for this circuit.

```
* Schematics Netlist *

R_R1         0 $N_0001  2
R_R2         $N_0003 $N_0002  6
R_R3         0 $N_0002  4
R_R4         0 $N_0004  1
R_R5         $N_0001 $N_0004  3
I_I1         0 $N_0003 DC 10A
V_V1         $N_0001 $N_0003 20V
E_E1         $N_0002 $N_0004 $N_0001 $N_0004 3
```

Chapter 3, Solution 82

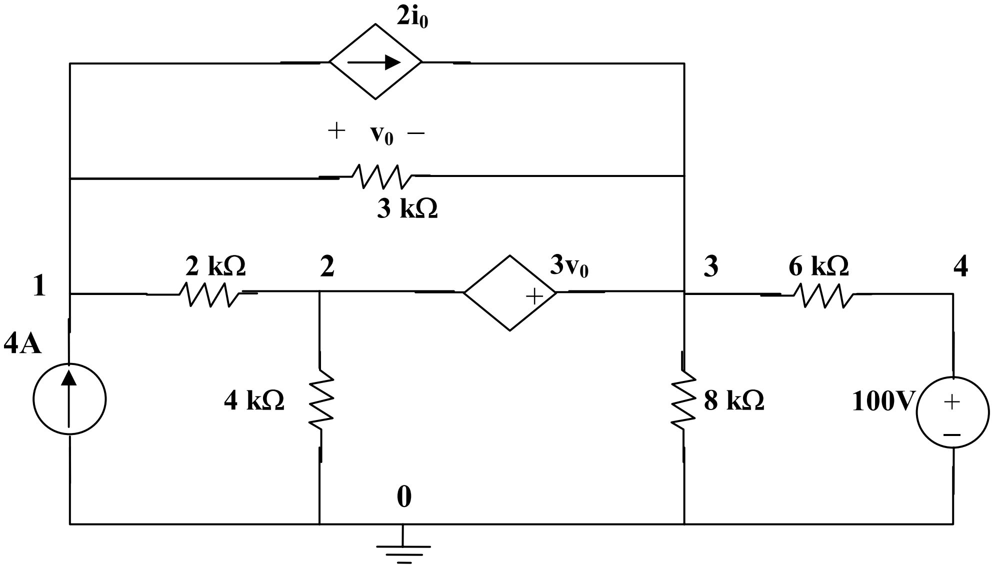

This network corresponds to the Netlist.

Chapter 3, Solution 83

The circuit is shown below.

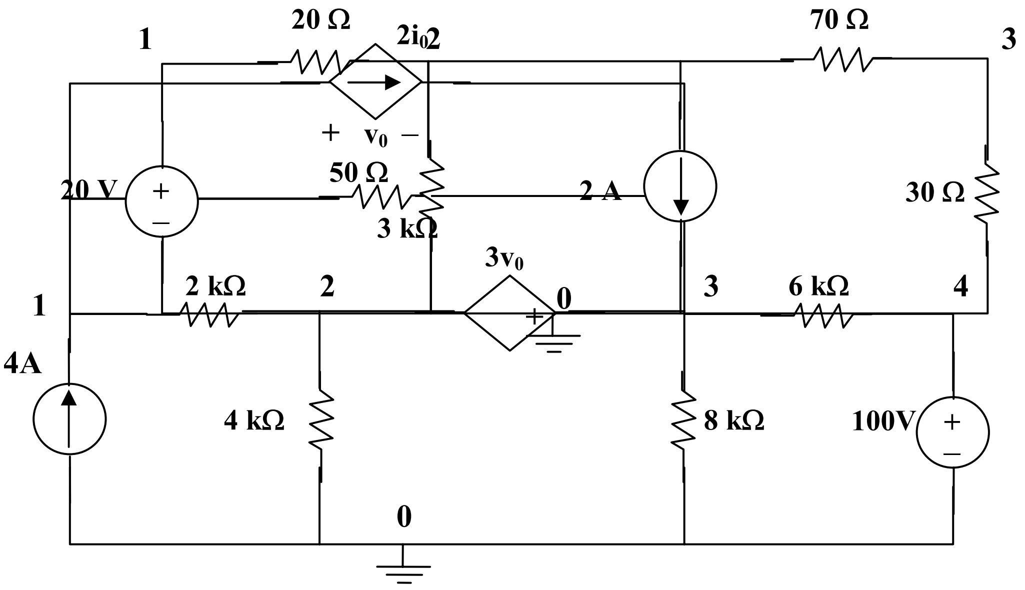

When the circuit is saved and simulated, we obtain v_2 = <u>-12.5 volts</u>

Chapter 3, Solution 84

From the output loop, $v_0 = 50i_0 x 20x10^3 = 10^6 i_0$ (1)

From the input loop, $3x10^{-3} + 4000i_0 - v_0/100 = 0$ (2)

From (1) and (2) we get, i_0 = **<u>0.5μA</u>** and v_0 = **<u>0.5 volt</u>**.

Chapter 3, Solution 85

The amplifier acts as a source.

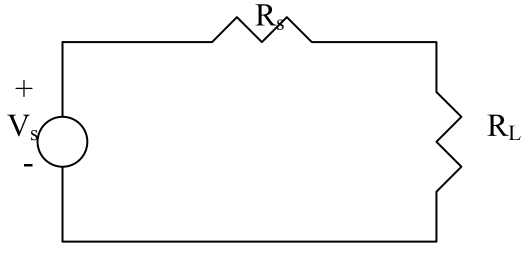

For maximum power transfer,

$$R_L = R_s = \underline{9\Omega}$$

Chapter 3, Solution 86

Let v_1 be the potential across the 2 k-ohm resistor with plus being on top. Then,

$[(0.03 - v_1)/1k] + 400i = v_1/2k$ (1)

Assume that i is in mA. But, $i = (0.03 - v_1)/1$ (2)

Combining (1) and (2) yields,

$v_1 = 29.963$ mVolts and $i = 37.4$ nA, therefore,

$v_0 = -5000x400x37.4x10^{-9} =$ **-74.8 mvolts**

Chapter 3, Solution 87

$v_1 = 500(v_s)/(500 + 2000) = v_s/5$

$v_0 = -400(60v_1)/(400 + 2000) = -40v_1 = -40(v_s/5) = -8v_s$,

Therefore, $v_0/v_s =$ **-8**

Chapter 3, Solution 88

Let v_1 be the potential at the top end of the 100-ohm resistor.

$(v_s - v_1)/200 = v_1/100 + (v_1 - 10^{-3}v_0)/2000$ (1)

For the right loop, $v_0 = -40i_0(10{,}000) = -40(v_1 - 10^{-3})10{,}000/2000$,

or, $v_0 = -200v_1 + 0.2v_0 = -4x10^{-3}v_0$ (2)

Substituting (2) into (1) gives,
$(v_s + 0.004v_1)/2 = -0.004v_0 + (-0.004v_1 - 0.001v_0)/20$

This leads to $0.125v_0 = 10v_s$ or $(v_0/v_s) = 10/0.125 =$ **-80**

Chapter 3, Solution 89

$$v_i = V_{BE} + 40k\ I_B \qquad (1)$$

$$5 = V_{CE} + 2k\ I_C \qquad (2)$$

If $I_C = \beta I_B = 75I_B$ and $V_{CE} = 2$ volts, then (2) becomes $5 = 2 + 2k(75I_B)$ which leads to $I_B = 20\ \mu A$.

Substituting this into (1) produces, $v_i = 0.7 + 0.8 =$ **1.5 volts**.

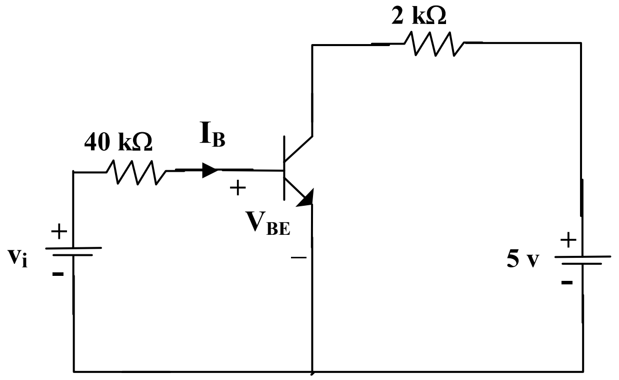

Chapter 3, Solution 90

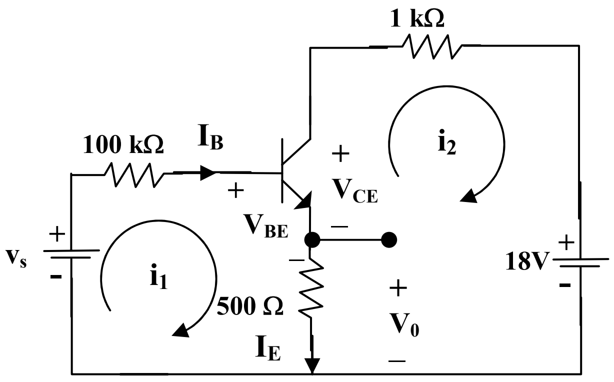

For loop 1, $-v_s + 10k(I_B) + V_{BE} + I_E\,(500) = 0 = -v_s + 0.7 + 10{,}000I_B + 500(1 + \beta)I_B$

which leads to $v_s + 0.7 = 10{,}000I_B + 500(151)I_B = 85{,}500I_B$

But, $v_0 = 500I_E = 500\text{x}151I_B = 4$ which leads to $I_B = 5.298\text{x}10^{-5}$

Therefore, $v_s = 0.7 + 85{,}500I_B =$ **5.23 volts**

Chapter 3, Solution 91

We first determine the Thevenin equivalent for the input circuit.

$R_{Th} = 6||2 = 6x2/8 = 1.5\ k\Omega$ and $V_{Th} = 2(3)/(2+6) = 0.75$ volts

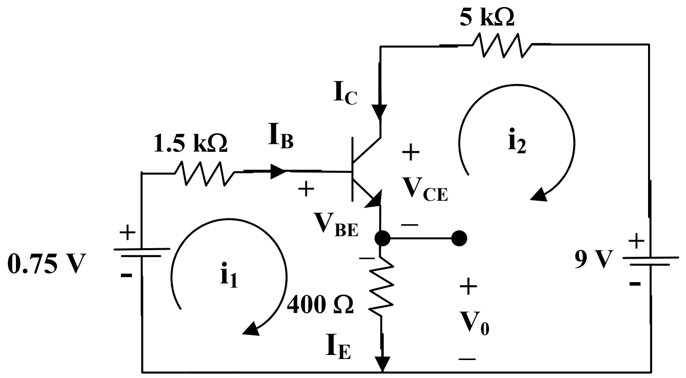

For loop 1, $-0.75 + 1.5kI_B + V_{BE} + 400I_E = 0 = -0.75 + 0.7 + 1500I_B + 400(1 + \beta)I_B$

$I_B = 0.05/81{,}900 = \underline{\mathbf{0.61\ \mu A}}$

$v_0 = 400I_E = 400(1 + \beta)I_B = \underline{\mathbf{49\ mV}}$

For loop 2, $-400I_E - V_{CE} - 5kI_C + 9 = 0$, but, $I_C = \beta I_B$ and $I_E = (1 + \beta)I_B$

$V_{CE} = 9 - 5k\beta I_B - 400(1 + \beta)I_B = 9 - 0.659 = \underline{\mathbf{8.641\ volts}}$

Chapter 3, Solution 92

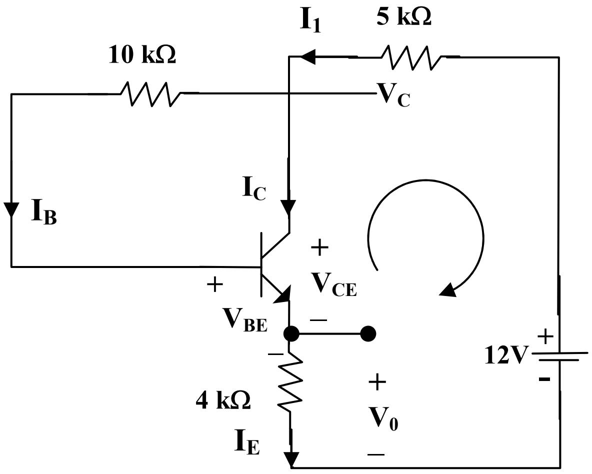

$I_1 = I_B + I_C = (1 + \beta)I_B$ and $I_E = I_B + I_C = I_1$

Applying KVL around the outer loop,

$4kI_E + V_{BE} + 10kI_B + 5kI_1 = 12$

$12 - 0.7 = 5k(1 + \beta)I_B + 10kI_B + 4k(1 + \beta)I_B = 919kI_B$

$I_B = 11.3/919k = 12.296\ \mu A$

Also, $12 = 5kI_1 + V_C$ which leads to $V_C = 12 - 5k(101)I_B =$ **5.791 volts**

Chapter 3, Solution 93

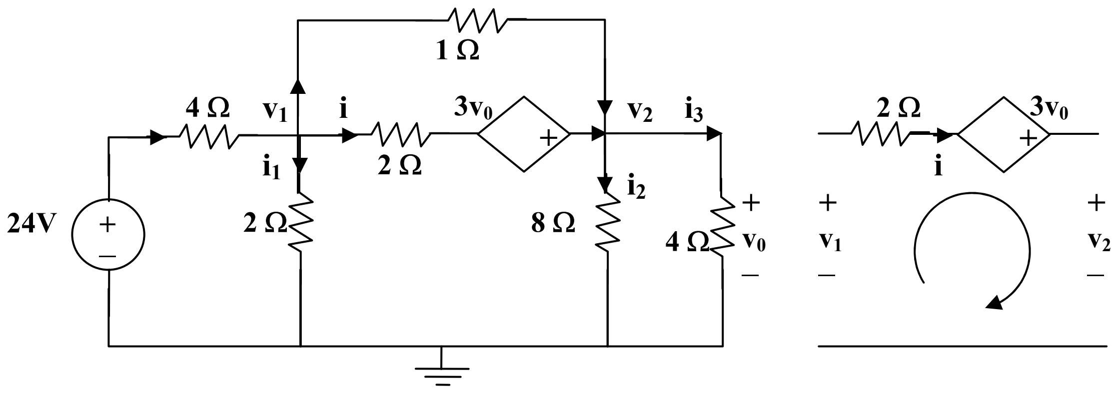

(a) **(b)**

From (b), $-v_1 + 2i - 3v_0 + v_2 = 0$ which leads to $i = (v_1 + 3v_0 - v_2)/2$

At node 1 in (a), $((24 - v_1)/4) = (v_1/2) + ((v_1 + 3v_0 - v_2)/2) + ((v_1 - v_2)/1)$, where $v_0 = v_2$

or $24 = 9v_1$ which leads to $v_1 =$ **2.667 volts**

At node 2, $((v_1 - v_2)/1) + ((v_1 + 3v_0 - v_2)/2) = (v_2/8) + v_2/4$, $v_0 = v_2$

$v_2 = 4v_1 =$ **10.66 volts**

Now we can solve for the currents, $i_1 = v_1/2 =$ **1.333 A**, $i_2 =$ **1.333 A**, and

$i_3 =$ **2.6667** A.

Chapter 4, Solution 1.

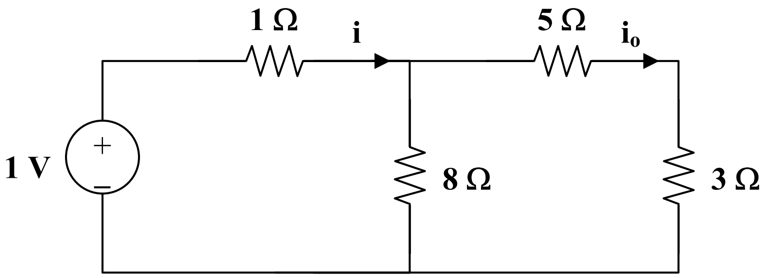

$$8\|(5+3) = 4\Omega, \quad i = \frac{1}{1+4} = \frac{1}{5}$$

$$i_o = \frac{1}{2}i = \frac{1}{10} = \underline{\mathbf{0.1A}}$$

Chapter 4, Solution 2.

$$6\|(4+2) = 3\Omega, \quad i_1 = i_2 = \frac{1}{2}A$$

$$i_o = \frac{1}{2}i_1 = \frac{1}{4}, \quad v_o = 2i_o = \underline{\mathbf{0.5V}}$$

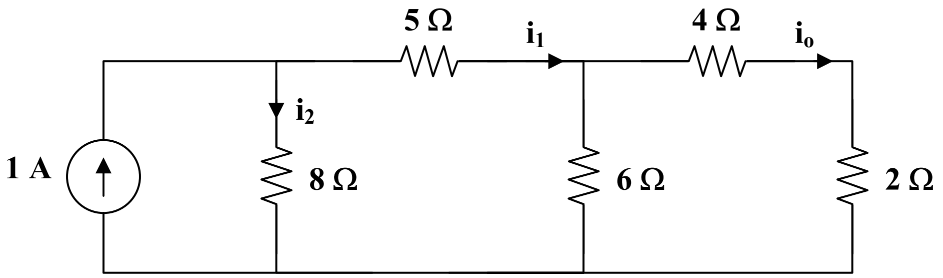

If i_s = 1μA, then v_o = **<u>0.5μV</u>**

Chapter 4, Solution 3.

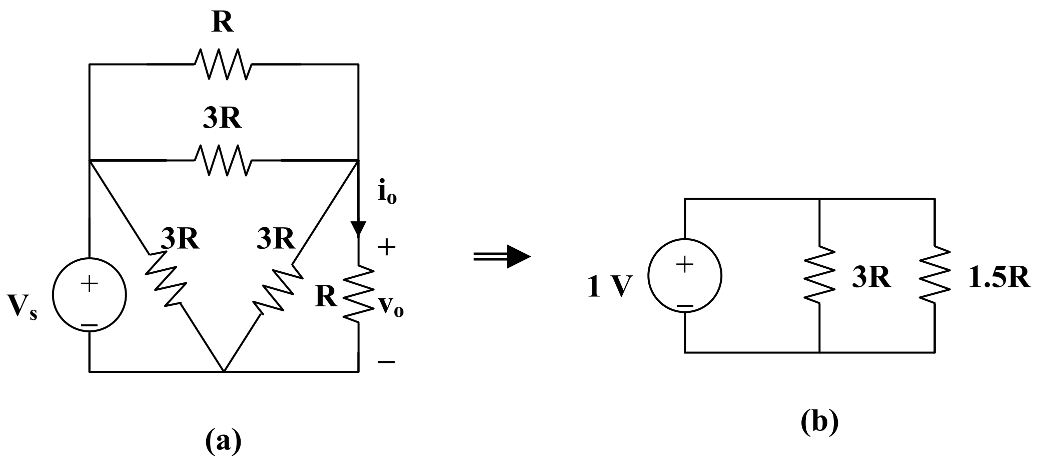

(a) We transform the Y sub-circuit to the equivalent Δ.

$$R\|3R = \frac{3R^2}{4R} = \frac{3}{4}R, \quad \frac{3}{4}R + \frac{3}{4}R = \frac{3}{2}R$$

$v_o = \frac{v_s}{2}$ independent of R

$i_o = v_o/(R)$

When $v_s = 1V$, $v_o =$ **0.5V**, $i_o =$ **0.5A**

(b) When $v_s = 10V$, $v_o =$ **5V**, $i_o =$ **5A**

(c) When $v_s = 10V$ and $R = 10\Omega$,
$v_o =$ **5V**, $i_o = 10/(10) =$ **500mA**

Chapter 4, Solution 4.

If $I_o = 1$, the voltage across the 6Ω resistor is 6V so that the current through the 3Ω resistor is 2A.

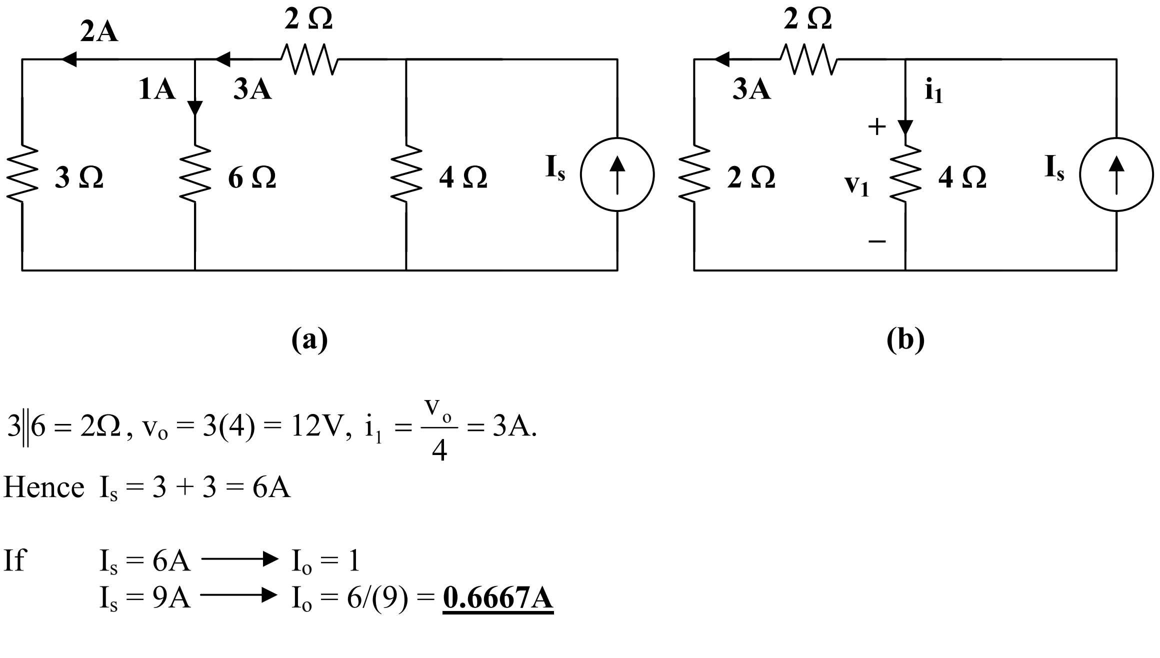

$3\|6 = 2\Omega$, $v_o = 3(4) = 12V$, $i_1 = \frac{v_o}{4} = 3A$.

Hence $I_s = 3 + 3 = 6A$

If $I_s = 6A \longrightarrow I_o = 1$
$I_s = 9A \longrightarrow I_o = 6/(9) =$ **0.6667A**

Chapter 4, Solution 5.

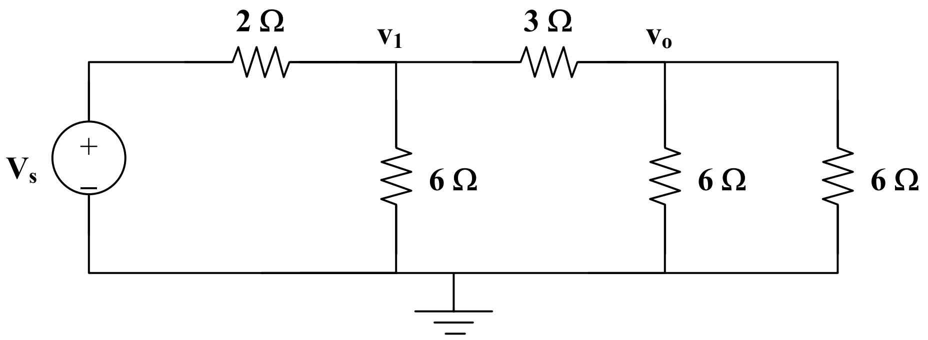

If $v_o = 1V$, $\quad V_1 = \left(\frac{1}{3}\right) + 1 = 2V$

$$V_s = 2\left(\frac{2}{3}\right) + v_1 = \frac{10}{3}$$

If $v_s = \frac{10}{3}$ ⟶ $v_o = 1$

Then $v_s = 15$ ⟶ $v_o = \frac{3}{10} x15 =$ **<u>4.5V</u>**

Chapter 4, Solution 6

Let $R_T = R_2 // R_3 = \dfrac{R_2 R_3}{R_2 + R_3}$, then $V_o = \dfrac{R_T}{R_T + R_1} V_s$

$$k = \frac{V_o}{V_s} = \frac{R_T}{R_T + R_1} = \frac{\dfrac{R_2 R_3}{R_2 + R_3}}{\dfrac{R_2 R_3}{R_2 + R_3} + R_1} = \underline{\frac{R_2 R_3}{R_1 R_2 + R_2 R_3 + R_3 R_1}}$$

Chapter 4, Solution 7

We find the Thevenin equivalent across the 10-ohm resistor. To find V_{Th}, consider the circuit below.

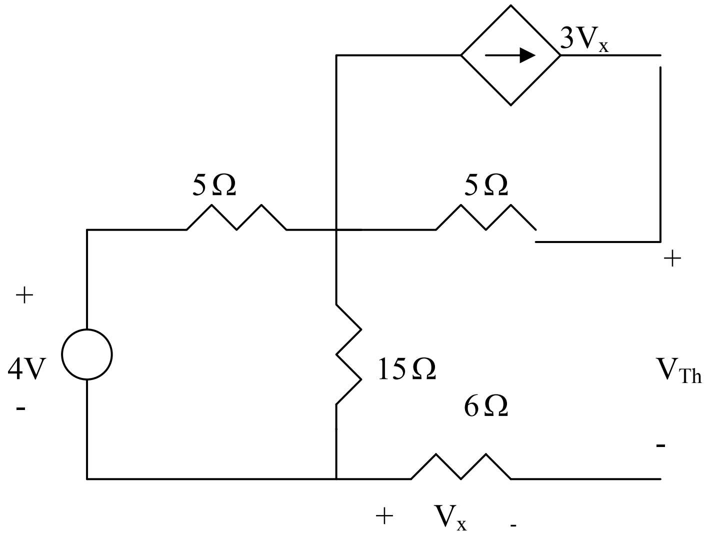

From the figure,

$$V_x = 0, \qquad V_{Th} = \frac{15}{15+5}(4) = 3\text{V}$$

To find $R_{Th,}$ consider the circuit below:

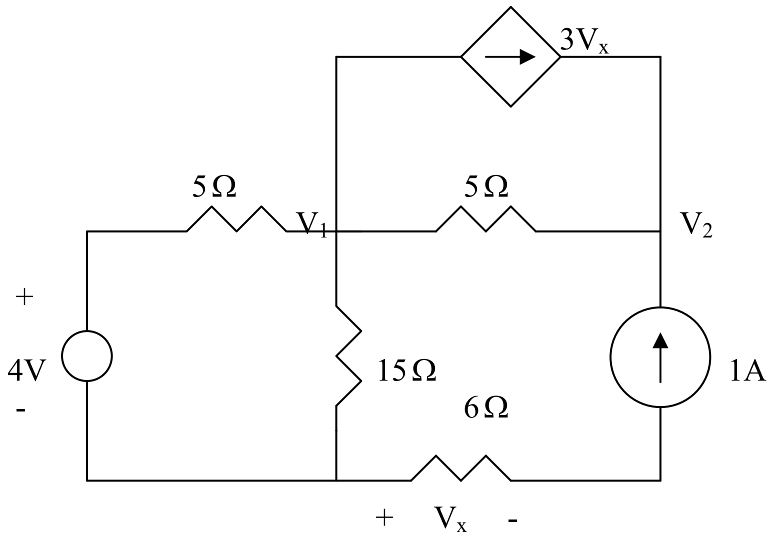

At node 1,

$$\frac{4-V_1}{5} = 3V_x + \frac{V_1}{15} + \frac{V_1 - V_2}{5}, \qquad V_x = 6x1 = 6 \quad \longrightarrow \quad 258 = 3V_2 - 7V_1 \qquad (1)$$

At node 2,

$$1+3V_x+\frac{V_1-V_2}{5}=0 \quad \longrightarrow \quad V_1=V_2-95 \qquad (2)$$

Solving (1) and (2) leads to $V_2 = 101.75$ V

$$R_{Th}=\frac{V_2}{1}=101.75\Omega, \qquad p_{\max}=\frac{V_{Th}^{\ 2}}{4R_{Th}}=\frac{9}{4x101.75}=\underline{22.11\,\text{mW}}$$

Chapter 4, Solution 8.

Let i = $i_1 + i_2$,

where i_1 and i_L are due to current and voltage sources respectively.

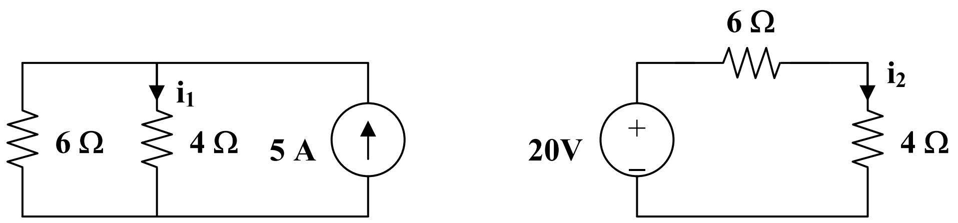

(a) **(b)**

$$i_1=\frac{6}{6+4}(5)=3\text{A},\ \ i_2=\frac{20}{6+4}=2\text{A}$$

Thus i = $i_1 + i_2$ = 3 + 2 = <u>**5A**</u>

Chapter 4, Solution 9.

Let $i_x = i_{x_1} + i_{x_2}$

where i_{x_1} is due to 15V source and i_{x_2} is due to 4A source,

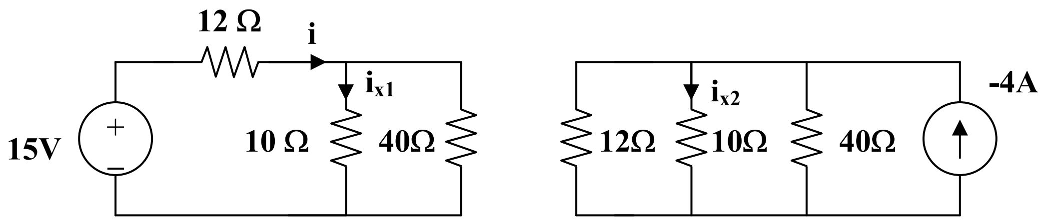

(a) **(b)**

For i_{x1}, consider Fig. (a).

$$10||40 = 400/50 = 8 \text{ ohms}, \quad i = 15/(12 + 8) = 0.75$$

$$i_{x1} = [40/(40 + 10)]i = (4/5)0.75 = 0.6$$

For i_{x2}, consider Fig. (b).

$$12||40 = 480/52 = 120/13$$

$$i_{x2} = [(120/13)/((120/13) + 10)](-4) = -1.92$$

$$i_x = 0.6 - 1.92 = \underline{\mathbf{-1.32\ A}}$$

$p = vi_x = i_x^2R = (-1.32)^2 10 =$ **<u>17.43 watts</u>**

Chapter 4, Solution 10.

Let $v_{ab} = v_{ab1} + v_{ab2}$ where v_{ab1} and v_{ab2} are due to the 4-V and the 2-A sources respectively.

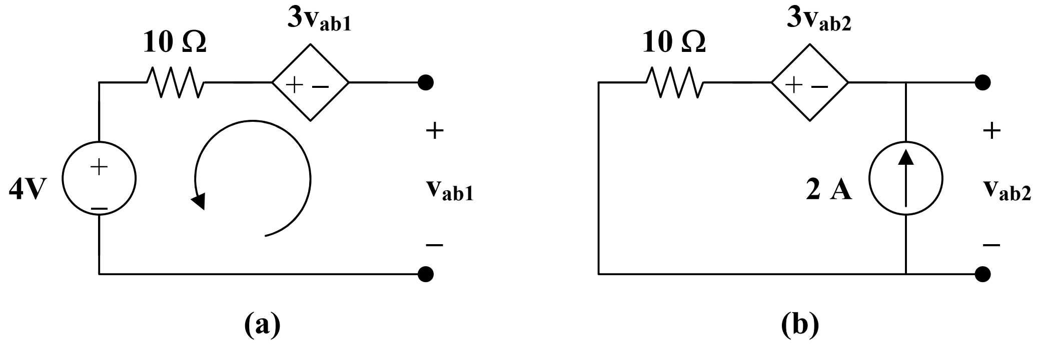

For v_{ab1}, consider Fig. (a). Applying KVL gives,

$$- v_{ab1} - 3\, v_{ab1} + 10x0 + 4 = 0, \text{ which leads to } v_{ab1} = 1 \text{ V}$$

For v_{ab2}, consider Fig. (b). Applying KVL gives,

$$- \quad v_{ab2} - 3v_{ab2} + 10x2 = 0, \text{ which leads to } v_{ab2} = 5$$

$v_{ab} = 1 + 5 =$ **<u>6 V</u>**

Chapter 4, Solution 11.

Let $i = i_1 + i_2$, where i_1 is due to the 12-V source and i_2 is due to the 4-A source.

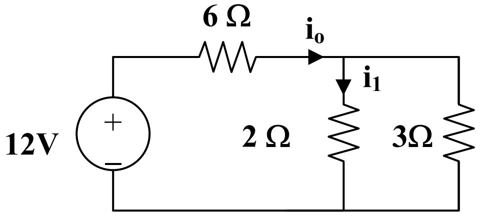

(a)

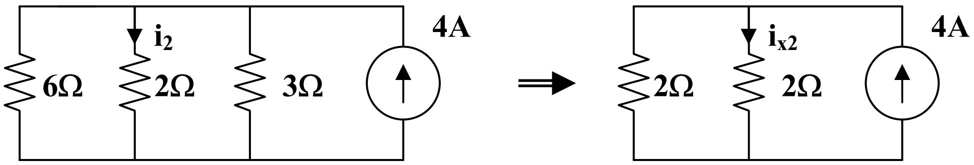

(b)

For i_1, consider Fig. (a).

$$2||3 = 2x3/5 = 6/5, \quad i_o = 12/(6 + 6/5) = 10/6$$

$$i_1 = [3/(2 + 3)]i_o = (3/5)x(10/6) = 1 \text{ A}$$

For i_2, consider Fig. (b), $\quad 6||3 = 2 \text{ ohm}, \; i_2 = 4/2 = 2 \text{ A}$

$$i = 1 + 2 = \underline{\mathbf{3\ A}}$$

Chapter 4, Solution 12.

Let $v_o = v_{o1} + v_{o2} + v_{o3}$, where v_{o1}, v_{o2}, and v_{o3} are due to the 2-A, 12-V, and 19-V sources respectively. For v_{o1}, consider the circuit below.

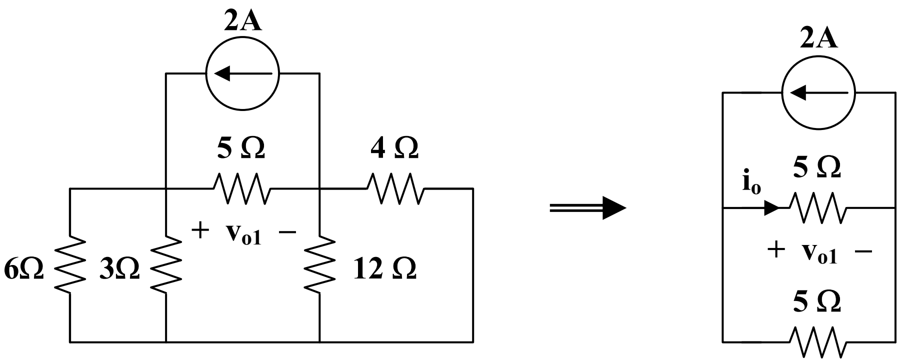

$6||3 = 2$ ohms, $4||12 = 3$ ohms. Hence,

$i_o = 2/2 = 1$, $v_{o1} = 5io = 5$ V

For v_{o2}, consider the circuit below.

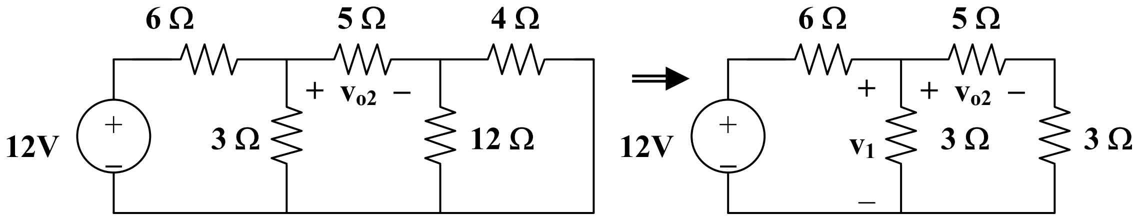

$3||8 = 24/11$, $v_1 = [(24/11)/(6 + 24/11)]12 = 16/5$

$v_{o2} = (5/8)v_1 = (5/8)(16/5) = \underline{\mathbf{2\ V}}$

For v_{o3}, consider the circuit shown below.

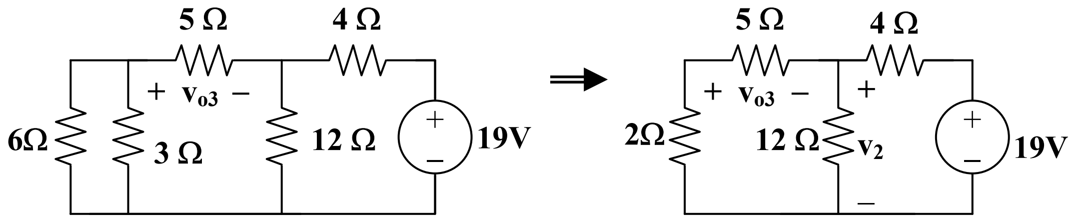

$7||12 = (84/19)$ ohms, $v_2 = [(84/19)/(4 + 84/19)]19 = 9.975$

$v = (-5/7)v2 = -7.125$

$v_o = 5 + 2 - 7.125 = \underline{\mathbf{-125\ mV}}$

Chapter 4, Solution 13

Let

$$i_o = i_1 + i_2 + i_3,$$

where i_1, i_2, and i_3 are the contributions to i_o due to 30-V, 15-V, and 6-mA sources respectively. For i_1, consider the circuit below.

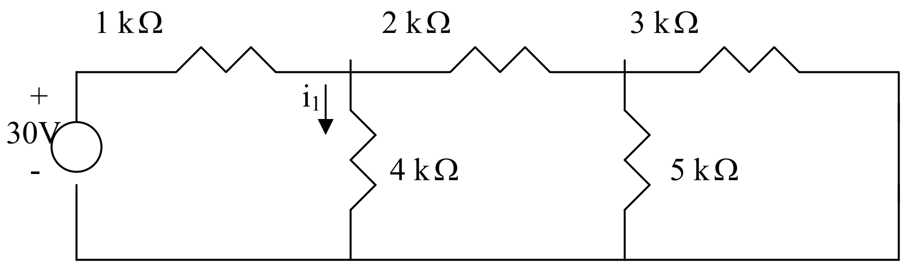

3//5 = 15/8 = 1.875 kohm, 2 + 3//5 = 3.875 kohm, 1//3.875 = 3.875/4.875 = 0.7949 kohm. After combining the resistors except the 4-kohm resistor and transforming the voltage source, we obtain the circuit below.

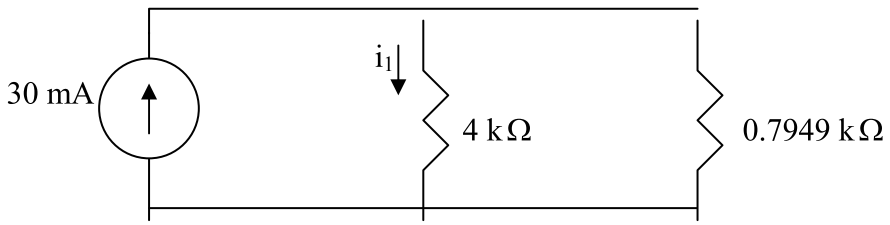

Using current division,

$$i_1 = \frac{0.7949}{4.7949}(30\text{mA}) = 4.973\text{ mA}$$

For i_2, consider the circuit below.

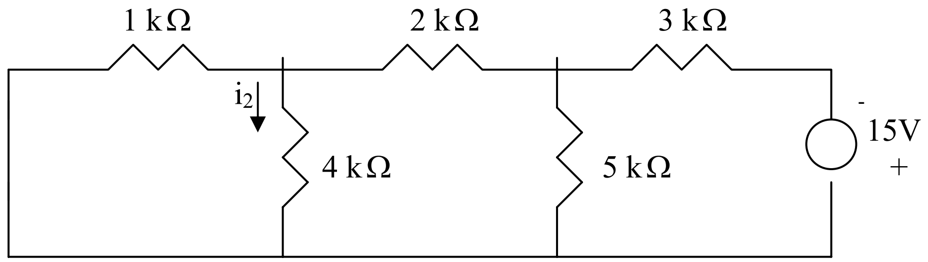

After successive source transformation and resistance combinations, we obtain the circuit below:

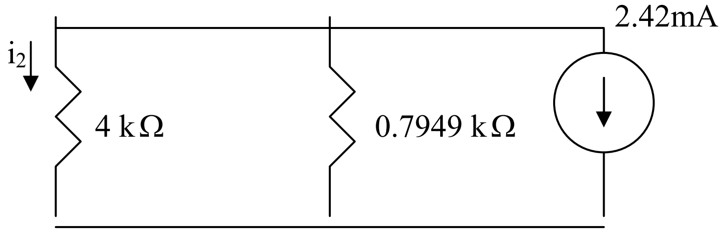

Using current division,

$$i_2 = -\frac{0.7949}{4.7949}(2.42\text{mA}) = -0.4012\text{ mA}$$

For i_3, consider the circuit below.

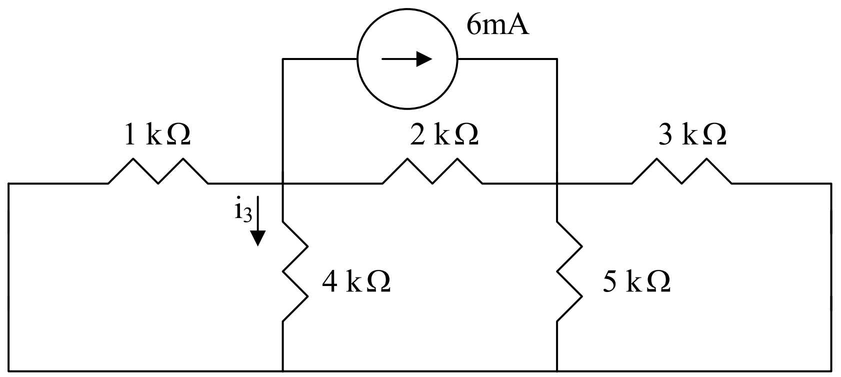

After successive source transformation and resistance combinations, we obtain the circuit below:

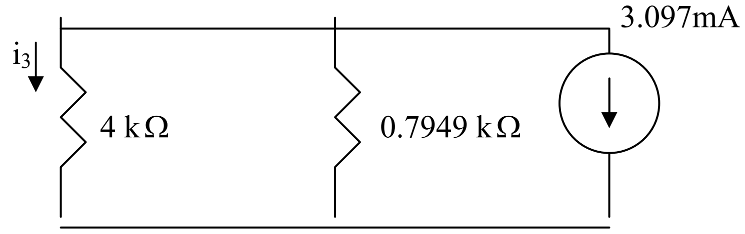

$$i_3 = -\frac{0.7949}{4.7949}(3.097\text{mA}) = -0.5134\ \text{mA}$$

Thus,

$$i_o = i_1 + i_2 + i_3 = \underline{4.058\ \text{mA}}$$

Chapter 4, Solution 14.

Let $v_o = v_{o1} + v_{o2} + v_{o3}$, where v_{o1}, v_{o2}, and v_{o3}, are due to the 20-V, 1-A, and 2-A sources respectively. For v_{o1}, consider the circuit below.

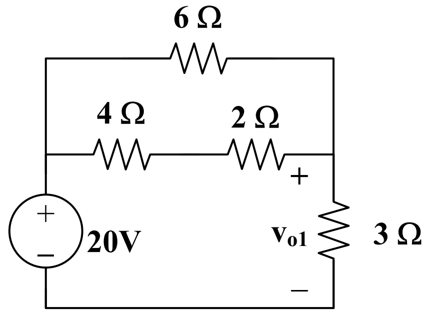

$$6||(4 + 2) = 3 \text{ ohms}, v_{o1} = (½)20 = 10 \text{ V}$$

For v_{o2}, consider the circuit below.

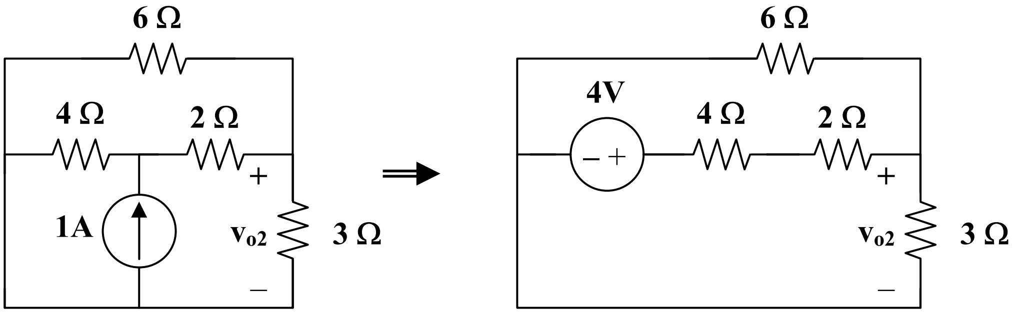

$$3||6 = 2 \text{ ohms}, v_{o2} = [2/(4 + 2 + 2)]4 = 1 \text{ V}$$

For v_{o3}, consider the circuit below.

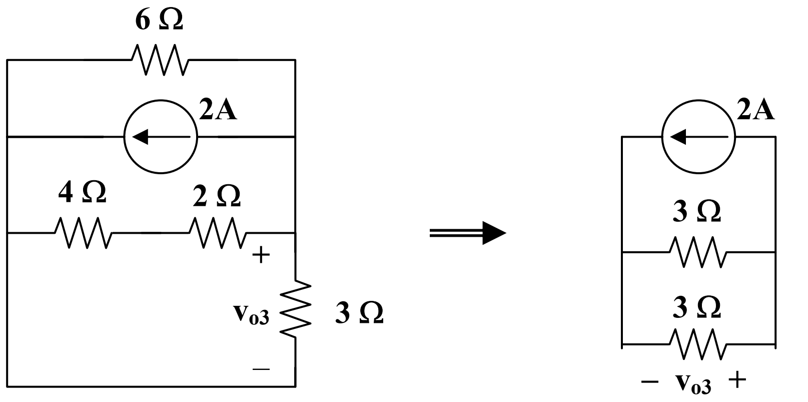

$$6||(4 + 2) = 3, v_{o3} = (-1)3 = -3$$

$$v_o = 10 + 1 - 3 = \underline{\mathbf{8\ V}}$$

Chapter 4, Solution 15.

Let $i = i_1 + i_2 + i_3$, where i_1 , i_2 , and i_3 are due to the 20-V, 2-A, and 16-V sources. For i_1, consider the circuit below.

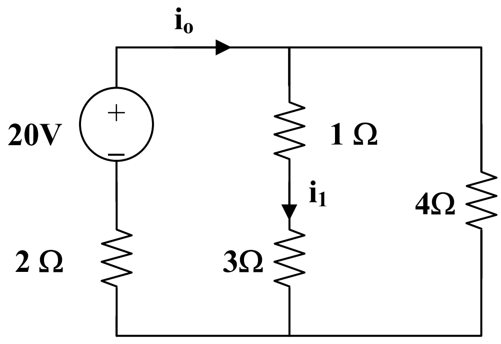

$4||(3 + 1) = 2$ ohms, Then $i_o = [20/(2 + 2)] = 5$ A, $i_1 = i_o/2 = 2.5$ A

For i_3, consider the circuit below.

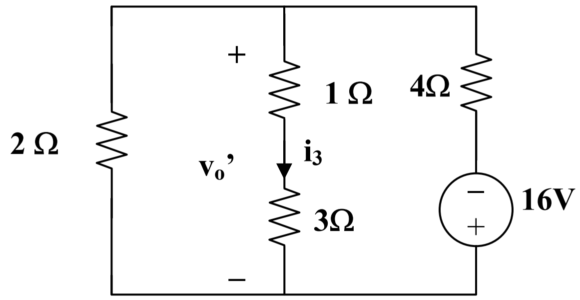

$$2||(1 + 3) = 4/3, \; v_o' = [(4/3)/((4/3) + 4)](-16) = -4$$

$$i_3 = v_o'/4 = -1$$

For i_2, consider the circuit below.

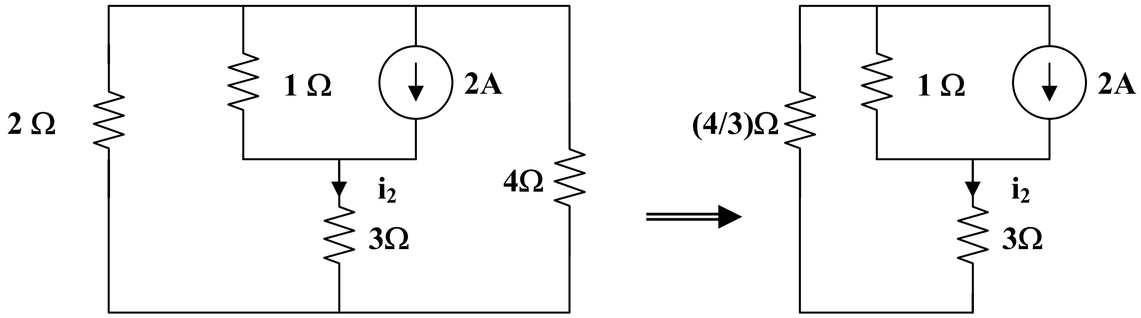

$$2||4 = 4/3, \; 3 + 4/3 = 13/3$$

Using the current division principle.

$$i_2 = [1/(1 + 13/2)]2 = 3/8 = 0.375$$

$$i = 2.5 + 0.375 - 1 = \underline{\mathbf{1.875\ A}}$$

$$p = i^2R = (1.875)^2 3 = \underline{\mathbf{10.55\ watts}}$$

Chapter 4, Solution 16.

Let $i_o = i_{o1} + i_{o2} + i_{o3}$, where i_{o1}, i_{o2}, and i_{o3} are due to the 12-V, 4-A, and 2-A sources. For i_{o1}, consider the circuit below.

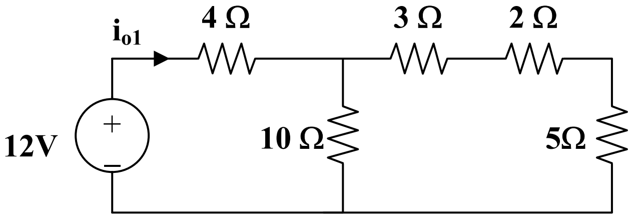

$$10||(3 + 2 + 5) = 5 \text{ ohms}, \; i_{o1} = 12/(5 + 4) = (12/9) \text{ A}$$

For i_{o2}, consider the circuit below.

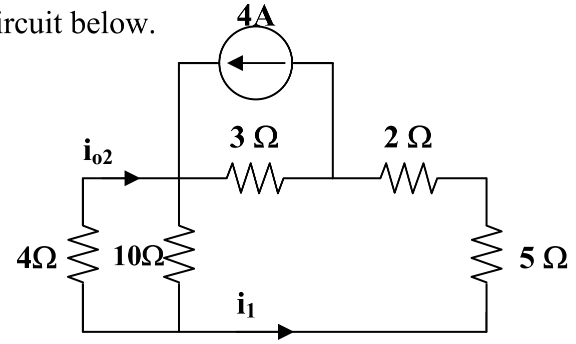

$$2 + 5 + 4||10 = 7 + 40/14 = 69/7$$

$$i_1 = [3/(3 + 69/7)]4 = 84/90, \; i_{o2} = [-10/(4 + 10)]i_1 = -6/9$$

For i_{o3}, consider the circuit below.

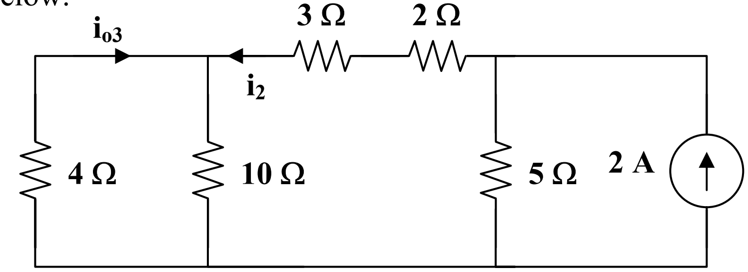

$$3 + 2 + 4||10 = 5 + 20/7 = 55/7$$

$$i_2 = [5/(5 + 55/7)]2 = 7/9, \; i_{o3} = [-10/(10 + 4)]i_2 = -5/9$$

$$i_o = (12/9) - (6/9) - (5/9) = 1/9 = \underline{\mathbf{111.11 \text{ mA}}}$$

Chapter 4, Solution 17.

Let $v_x = v_{x1} + v_{x2} + v_{x3}$, where v_{x1},v_{x2}, and v_{x3} are due to the 90-V, 6-A, and 40-V sources. For v_{x1}, consider the circuit below.

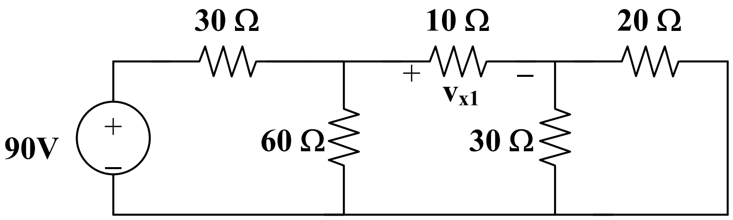

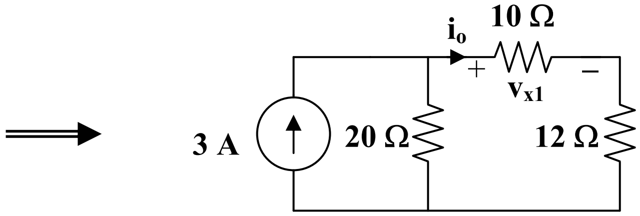

$$20||30 = 12 \text{ ohms}, \quad 60||30 = 20 \text{ ohms}$$

By using current division,

$$i_o = [20/(22 + 20)]3 = 60/42, \quad v_{x1} = 10i_o = 600/42 = 14.286 \text{ V}$$

For v_{x2}, consider the circuit below.

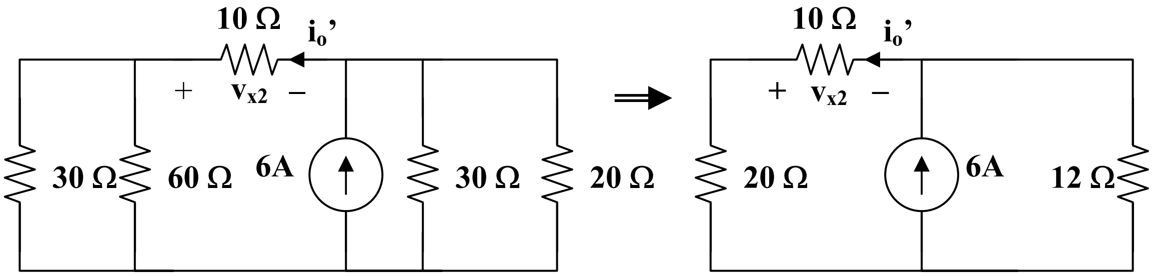

$$i_o' = [12/(12 + 30)]6 = 72/42, \quad v_{x2} = -10i_o' = -17.143 \text{ V}$$

For v_{x3}, consider the circuit below.

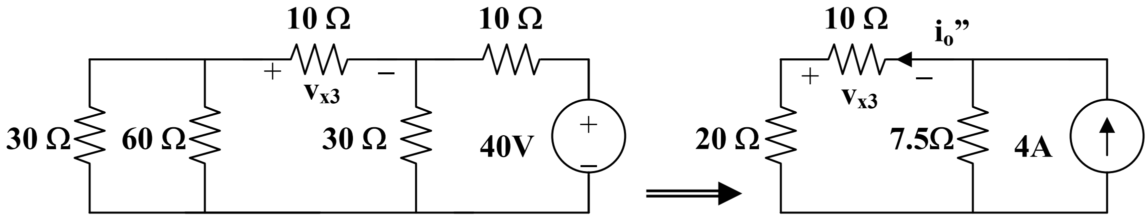

$$i_o'' = [12/(12 + 30)]2 = 24/42, \quad v_{x3} = -10i_o'' = -5.714$$

$$v_x = 14.286 - 17.143 - 5.714 = \underline{\mathbf{-8.571 \text{ V}}}$$

Chapter 4, Solution 18.

Let $i_x = i_1 + i_2$, where i_1 and i_2 are due to the 10-V and 2-A sources respectively. To obtain i_1, consider the circuit below.

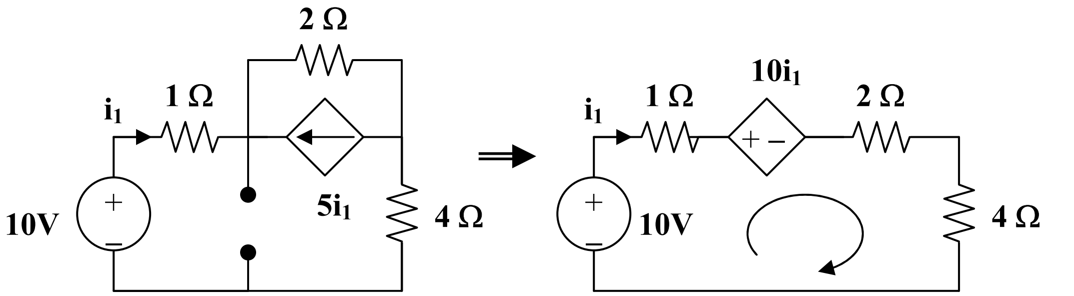

$$-10 + 10i_1 + 7i_1 = 0, \text{ therefore } i_1 = (10/17) \text{ A}$$

For i_2, consider the circuit below.

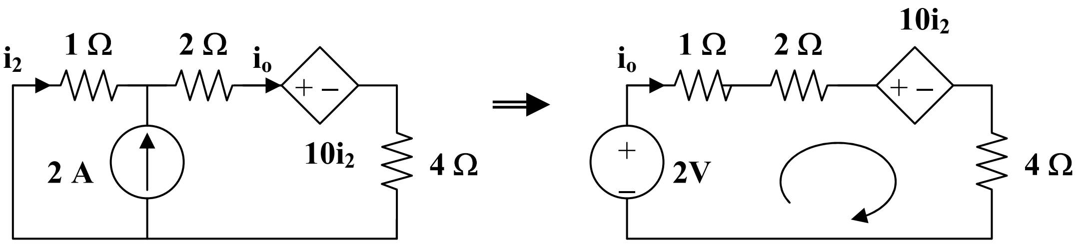

$$-2 + 10i_2 + 7i_o = 0, \text{ but } i_2 + 2 = i_o. \text{ Hence,}$$

$$-2 + 10i_2 + 7i_2 + 14 = 0, \text{ or } i_2 = (-12/17) \text{ A}$$

$v_x = 1xi_x = 1(i_1 + i_2) = (10/17) – (12/17) = -2/17 =$ **-117.6 mA**

Chapter 4, Solution 19.

Let $v_x = v_1 + v_2$, where v_1 and v_2 are due to the 4-A and 6-A sources respectively.

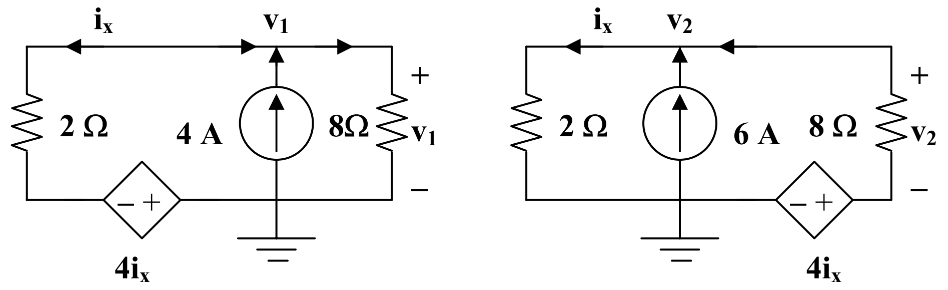

(a) **(b)**

To find v_1, consider the circuit in Fig. (a).

$$v_1/8 = 4 + (-4i_x - v_1)/2$$

But, $-i_x = (-4i_x - v_1)/2$ and we have $-2i_x = v_1$. Thus,

$$v_1/8 = 4 + (2v_1 - v_1)/8, \text{ which leads to } v_1 = -32/3$$

To find v_2, consider the circuit shown in Fig. (b).

$$v_2/2 = 6 + (4i_x - v_2)/8$$

But $i_x = v_2/2$ and $2i_x = v_2$. Therefore,

$$v_2/2 = 6 + (2v_2 - v_2)/8 \text{ which leads to } v_2 = -16$$

Hence, $vx = -(32/3) - 16 = \underline{\mathbf{-26.67\ V}}$

Chapter 4, Solution 20.

Transform the voltage sources and obtain the circuit in Fig. (a). Combining the 6-ohm and 3-ohm resistors produces a 2-ohm resistor (6||3 = 2). Combining the 2-A and 4-A sources gives a 6-A source. This leads to the circuit shown in Fig. (b).

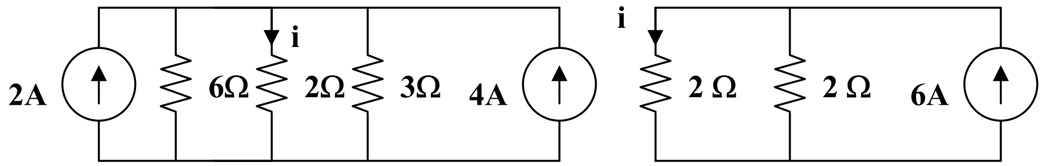

(a) **(b)**

From Fig. (b), $i = 6/2 = \underline{\mathbf{3\ A}}$

Chapter 4, Solution 21.

To get i_o, transform the current sources as shown in Fig. (a).

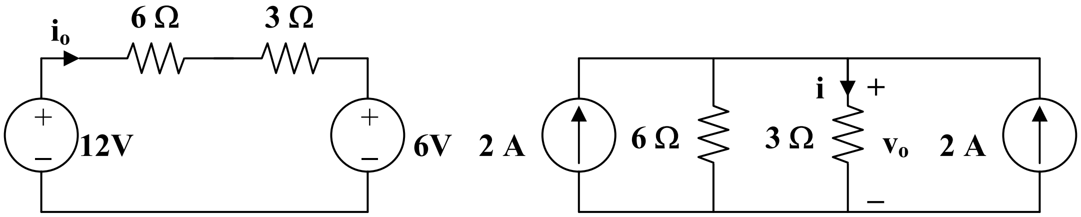

(a) **(b)**

From Fig. (a), $-12 + 9i_o + 6 = 0$, therefore i_o = **666.7 mA**

To get v_o, transform the voltage sources as shown in Fig. (b).

$$i = [6/(3 + 6)](2 + 2) = 8/3$$

$v_o = 3i$ = **8 V**

Chapter 4, Solution 22.

We transform the two sources to get the circuit shown in Fig. (a).

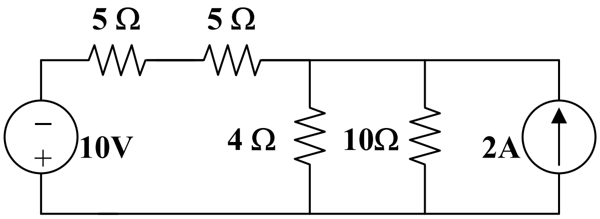

(a)

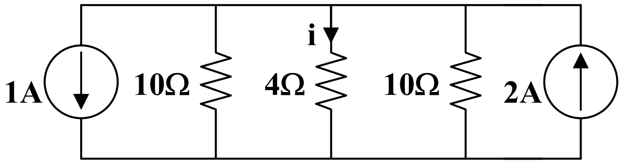

(b)

We now transform only the voltage source to obtain the circuit in Fig. (b).

10||10 = 5 ohms, $i = [5/(5 + 4)](2 – 1) = 5/9$ = **555.5 mA**

Chapter 4, Solution 23

If we transform the voltage source, we obtain the circuit below.

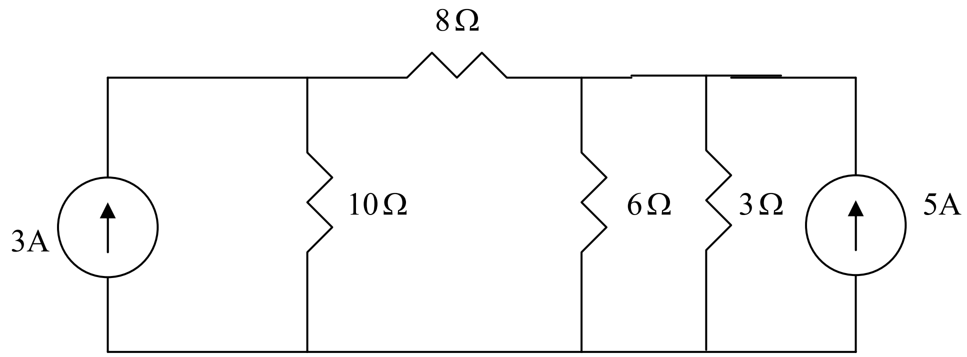

3//6 = 2-ohm. Convert the current sources to voltages sources as shown below.

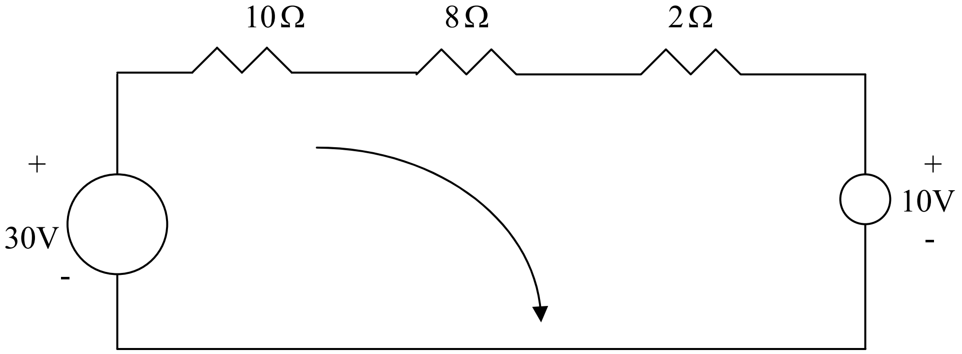

Applying KVL to the loop gives

$-30+10+I(10+8+2)=0 \quad \longrightarrow \quad \underline{I=1\,\text{A}}$

$$p = VI = I^2R = \underline{8\text{ W}}$$

Chapter 4, Solution 24

Convert the current source to voltage source.

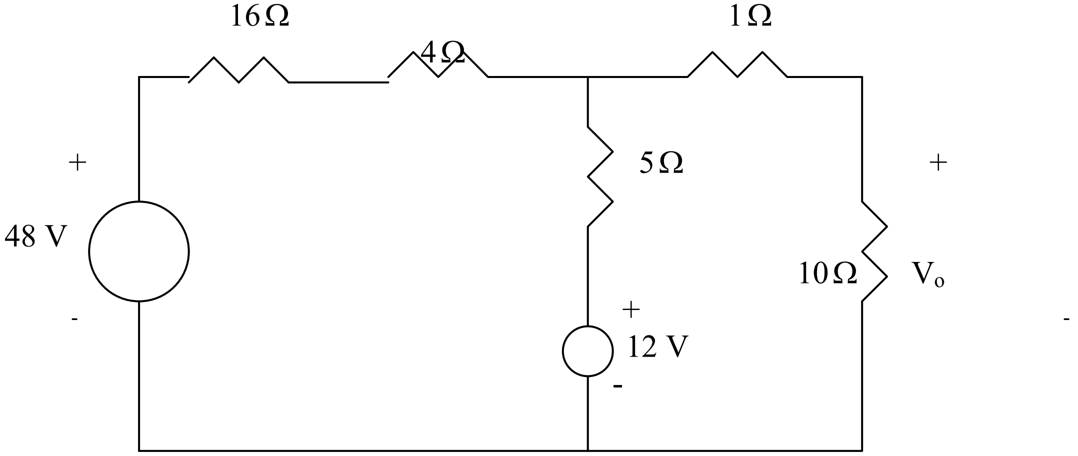

Combine the 16-ohm and 4-ohm resistors and convert both voltages sources to current Sources. We obtain the circuit below.

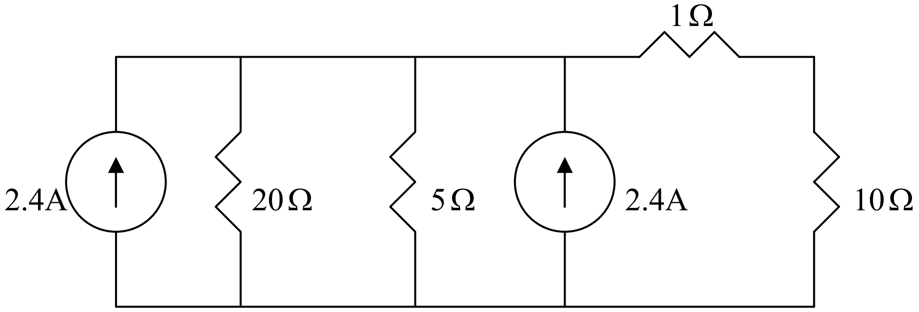

Combine the resistors and current sources.
20//5 = (20x5)/25 = 4 Ω, 2.4 + 2.4 = 4.8 A
Convert the current source to voltage source. We obtain the circuit below.

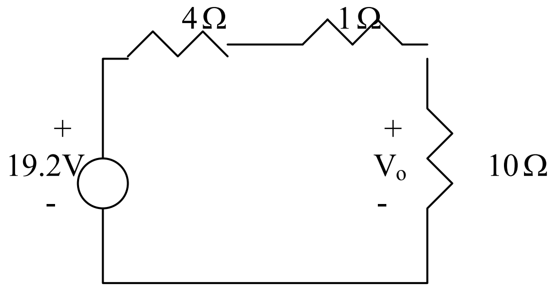

Using voltage division,

$$V_o = \frac{10}{10+4+1}(19.2) = \underline{12.8} \text{ V}$$

Chapter 4, Solution 25.

Transforming only the current source gives the circuit below.

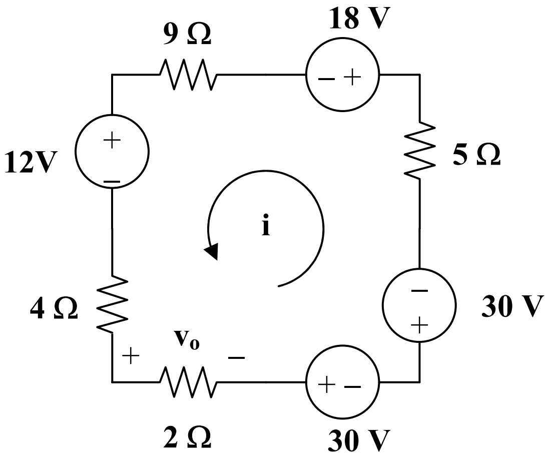

Applying KVL to the loop gives,

$$(4 + 9 + 5 + 2)i - 12 - 18 - 30 - 30 = 0$$

$$20i = 90 \text{ which leads to } i = 4.5$$

$v_o = 2i = \underline{\mathbf{9\ V}}$

Chapter 4, Solution 26.

Transform the voltage sources to current sources. The result is shown in Fig. (a),

$$30||60 = 20 \text{ ohms}, \qquad 30||20 = 12 \text{ ohms}$$

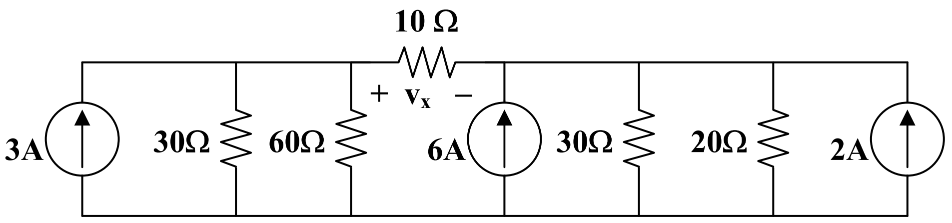

(a)

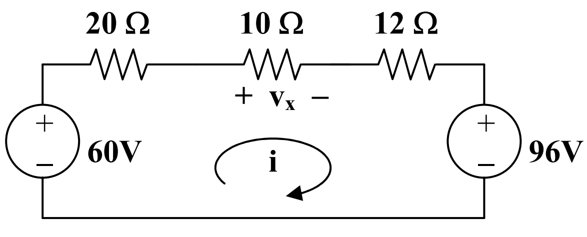

(b)

Combining the resistors and transforming the current sources to voltage sources, we obtain the circuit in Fig. (b). Applying KVL to Fig. (b),

$$42i - 60 + 96 = 0, \text{ which leads to } i = -36/42$$

$v_x = 10i =$ **-8.571 V**

Chapter 4, Solution 27.

Transforming the voltage sources to current sources gives the circuit in Fig. (a).

$$10||40 = 8 \text{ ohms}$$

Transforming the current sources to voltage sources yields the circuit in Fig. (b). Applying KVL to the loop,

$$-40 + (8 + 12 + 20)i + 200 = 0 \text{ leads to } i = -4$$

v_x $12i =$ **-48 V**

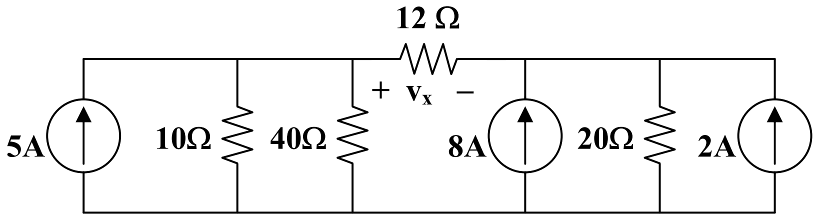

(a)

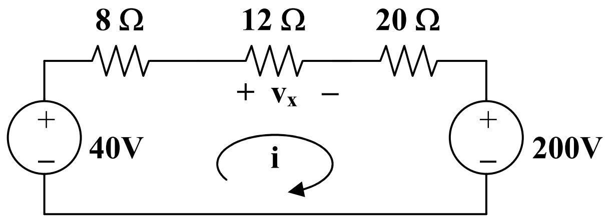

(b)

Chapter 4, Solution 28.

Transforming only the current sources leads to Fig. (a). Continuing with source transformations finally produces the circuit in Fig. (d).

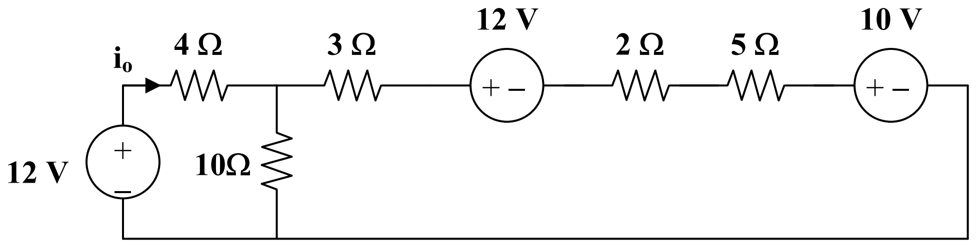

(a)

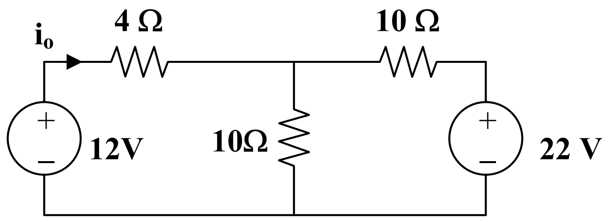

(b)

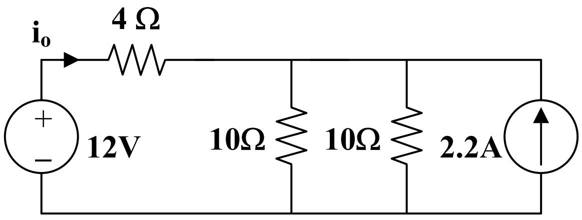

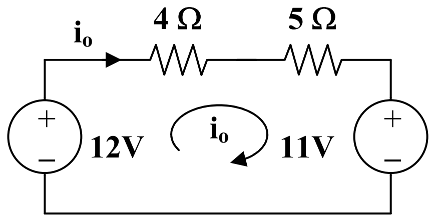

(c) **(d)**

Applying KVL to the loop in fig. (d),

$$-12 + 9i_o + 11 = 0, \text{ produces } i_o = 1/9 = \underline{\textbf{111.11 mA}}$$

Chapter 4, Solution 29.

Transform the dependent voltage source to a current source as shown in Fig. (a). 2||4 = (4/3) k ohms

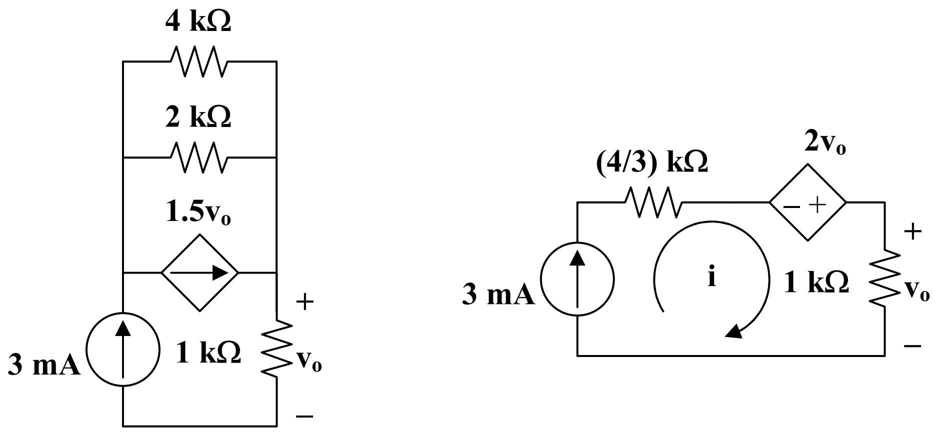

(a) (b)

It is clear that i = 3 mA which leads to v_o = 1000i = **3 V**

If the use of source transformations was not required for this problem, the actual answer could have been determined by inspection right away since the only current that could have flowed through the 1 k ohm resistor is 3 mA.

Chapter 4, Solution 30

Transform the dependent current source as shown below.

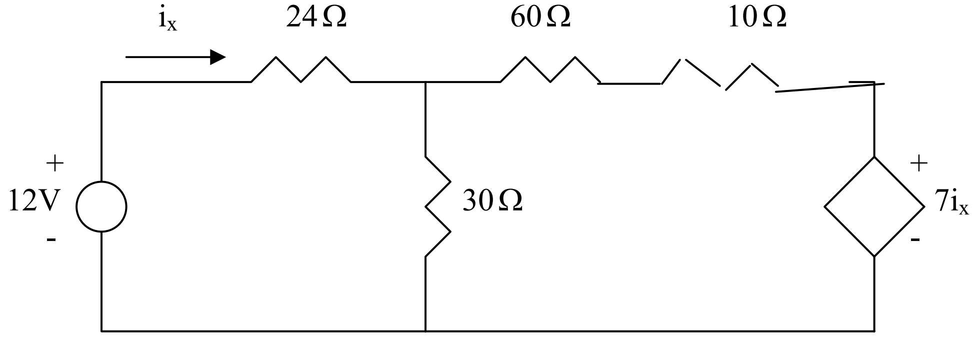

Combine the 60-ohm with the 10-ohm and transform the dependent source as shown below.

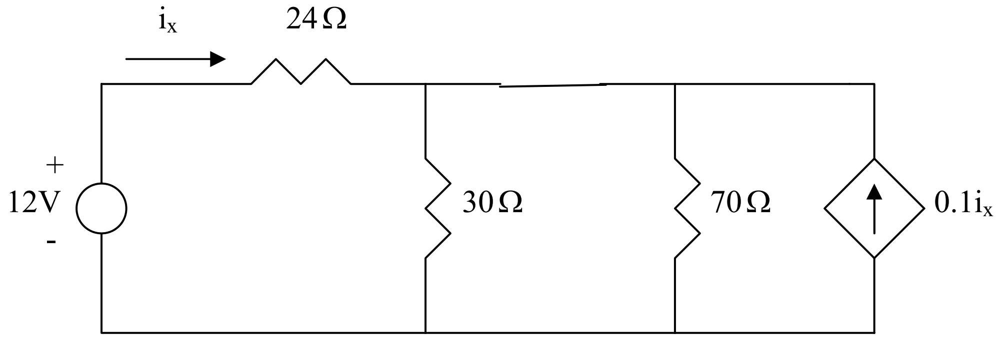

Combining 30-ohm and 70-ohm gives 30//70 = 70x30/100 = 21-ohm. Transform the dependent current source as shown below.

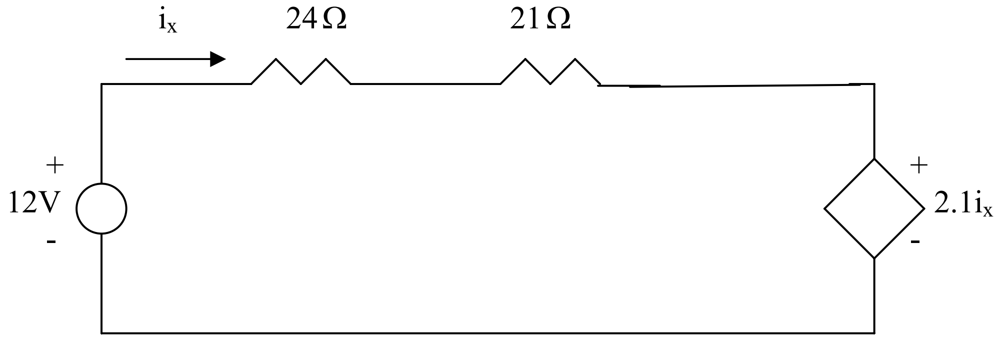

Applying KVL to the loop gives

$$45i_x - 12 + 2.1i_x = 0 \quad \longrightarrow \quad i_x = \frac{12}{47.1} = \underline{254.8\text{ mA}}$$

Chapter 4, Solution 31.

Transform the dependent source so that we have the circuit in Fig. (a). 6||8 = (24/7) ohms. Transform the dependent source again to get the circuit in Fig. (b).

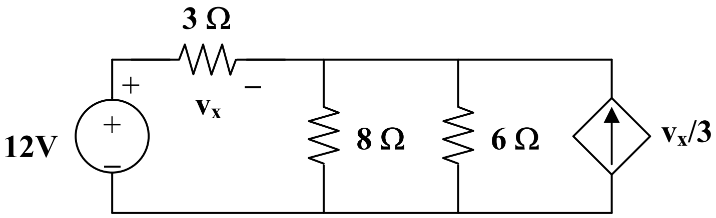

(a)

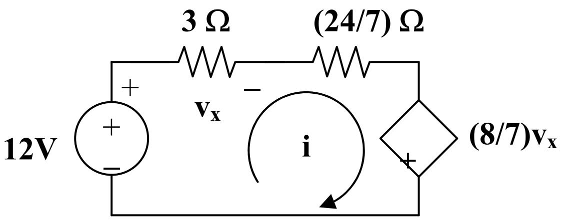

(b)

From Fig. (b),

$$v_x = 3i, \text{ or } i = v_x/3.$$

Applying KVL,

$$-12 + (3 + 24/7)i + (24/21)v_x = 0$$

$12 = [(21 + 24)/7]v_x/3 + (8/7)v_x$, leads to $v_x = 84/23 =$ **<u>3.625 V</u>**

Chapter 4, Solution 32.

As shown in Fig. (a), we transform the dependent current source to a voltage source,

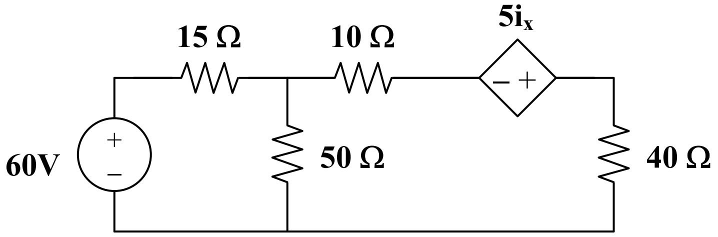

(a)

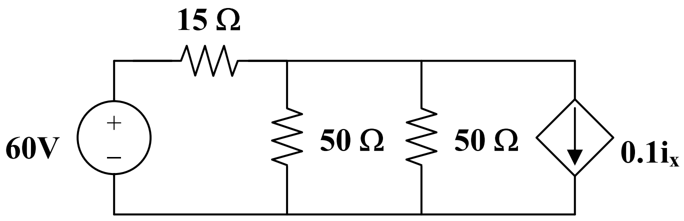

(b)

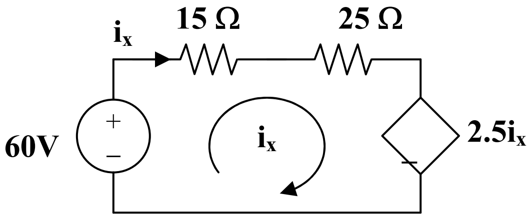

(c)

In Fig. (b), 50||50 = 25 ohms. Applying KVL in Fig. (c),

$-60 + 40i_x - 2.5i_x = 0$, or i_x = **1.6 A**

Chapter 4, Solution 33.

(a) $R_{Th} = 10||40 = 400/50 =$ **8 ohms**

$$V_{Th} = (40/(40 + 10))20 = \underline{\mathbf{16\ V}}$$

(b) $R_{Th} = 30||60 = 1800/90 =$ **20 ohms**

$$2 + (30 - v1)/60 = v_1/30, \text{ and } v_1 = V_{Th}$$

$$120 + 30 - v_1 = 2v_1, \text{ or } v_1 = 50\text{ V}$$

$$V_{Th} = \underline{\mathbf{50\ V}}$$

Chapter 4, Solution 34.

To find R_{Th}, consider the circuit in Fig. (a).

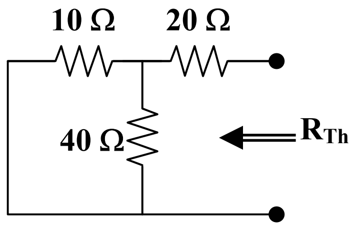

(a)

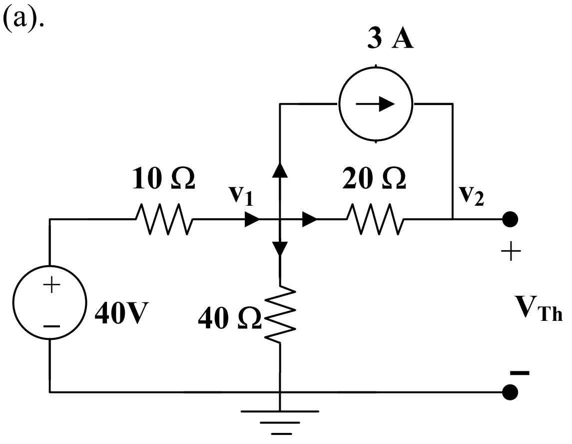

(b)

$$R_{Th} = 20 + 10||40 = 20 + 400/50 = \underline{\mathbf{28\ ohms}}$$

To find V_{Th}, consider the circuit in Fig. (b).

At node 1, $(40 - v_1)/10 = 3 + [(v_1 - v_2)/20] + v_1/40,\ 40 = 7v_1 - 2v_2$ (1)
At node 2, $3 + (v1 - v2)/20 = 0$, or $v1 = v2 - 60$ (2)

Solving (1) and (2), $v_1 = 32$ V, $v_2 = 92$ V, and $V_{Th} = v_2$ = **92 V**

Chapter 4, Solution 35.

To find R_{Th}, consider the circuit in Fig. (a).

$$R_{Th} = R_{ab} = 6||3 + 12||4 = 2 + 3 = 5 \text{ ohms}$$

To find V_{Th}, consider the circuit shown in Fig. (b).

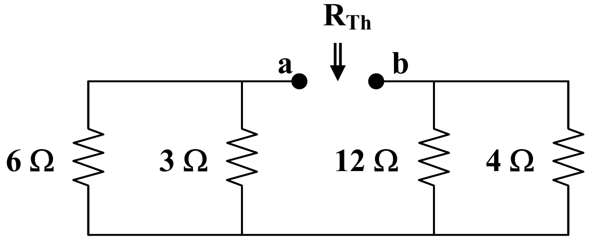

(a)

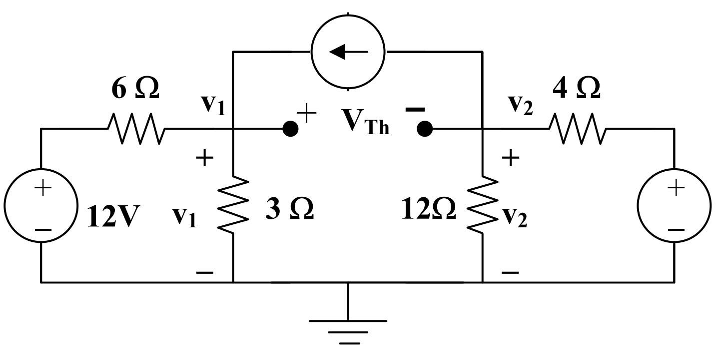

(b)

At node 1, $2 + (12 - v_1)/6 = v_1/3$, or $v_1 = 8$

At node 2, $(19 - v_2)/4 = 2 + v_2/12$, or $v_2 = 33/4$

But, $-v_1 + V_{Th} + v_2 = 0$, or $V_{Th} = v_1 - v_2 = 8 - 33/4 = -0.25$

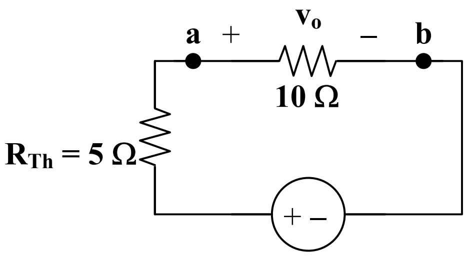

V_{Th} = (-1/4)V

$v_o = V_{Th}/2 = -0.25/2 =$ **-125 mV**

Chapter 4, Solution 36.

Remove the 30-V voltage source and the 20-ohm resistor.

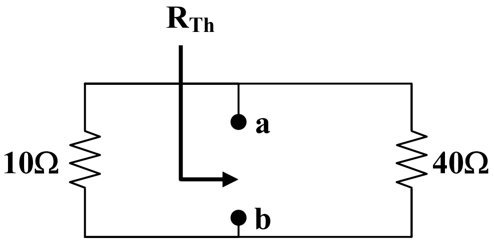

(a)

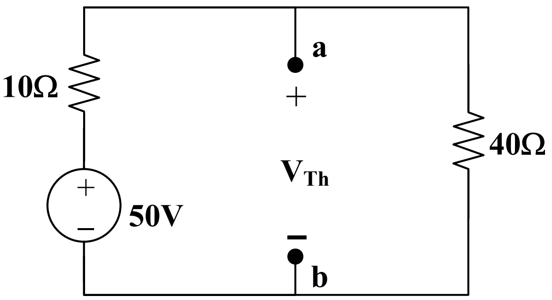

(b)

From Fig. (a), R_{Th} = 10||40 = 8 ohms

From Fig. (b), V_{Th} = (40/(10 + 40))50 = 40V

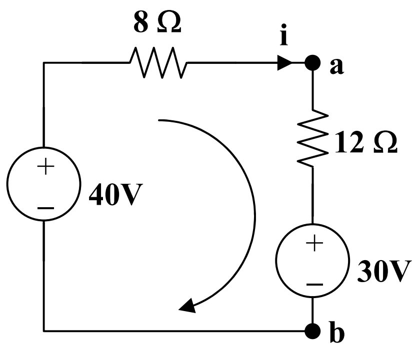

(c)

The equivalent circuit of the original circuit is shown in Fig. (c). Applying KVL,

30 – 40 + (8 + 12)i = 0, which leads to i = **<u>500mA</u>**

Chapter 4, Solution 37

R_N is found from the circuit below.

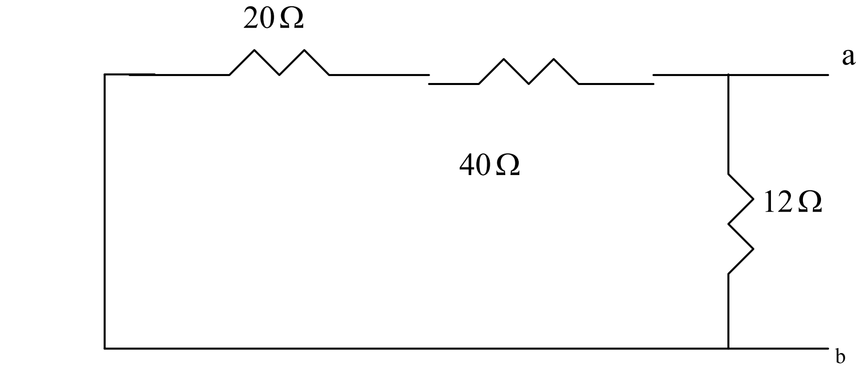

$R_N = 12//(20+40) = \underline{10\Omega}$

I_N is found from the circuit below.

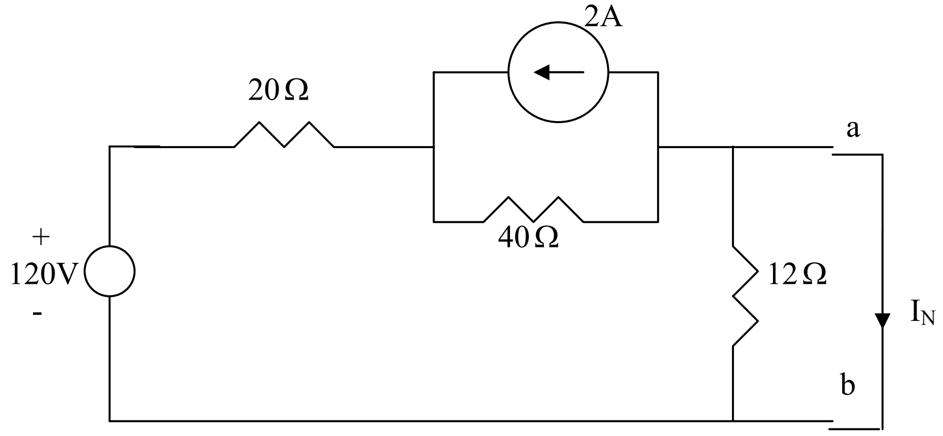

Applying source transformation to the current source yields the circuit below.

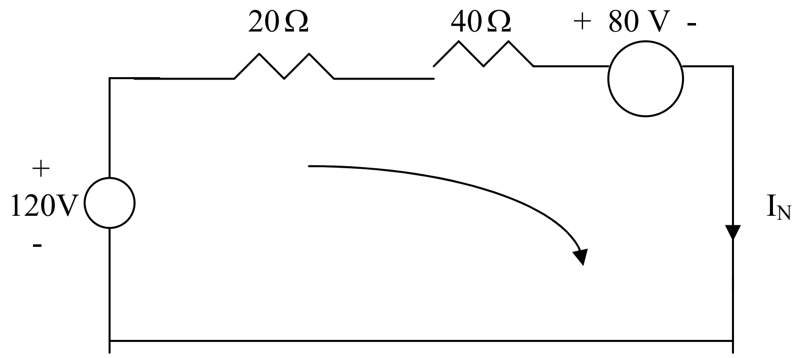

Applying KVL to the loop yields

$-120 + 80 + 60I_N = 0 \quad \longrightarrow \quad I_N = 40/60 = \underline{0.6667 \text{ A}}$

Chapter 4, Solution 38

We find Thevenin equivalent at the terminals of the 10-ohm resistor. For R_{Th}, consider the circuit below.

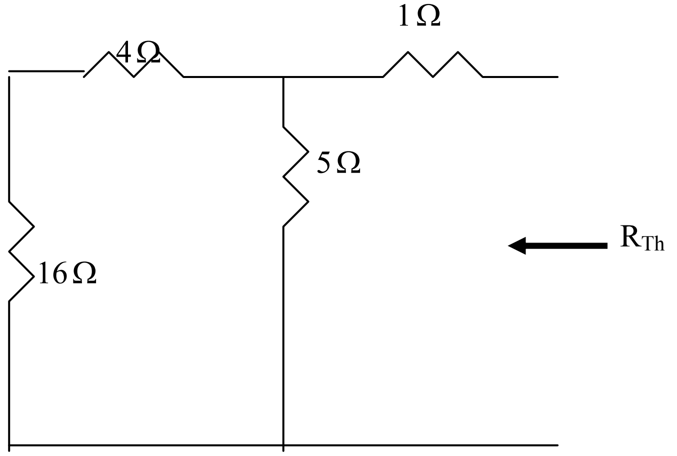

$$R_{Th} = 1 + 5//(4+16) = 1+4 = 5\Omega$$

For V_{Th}, consider the circuit below.

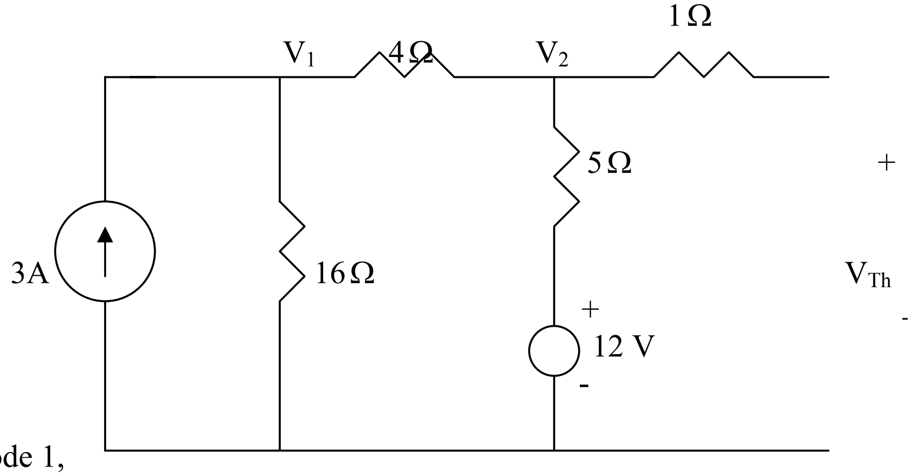

At node 1,

$$3 = \frac{V_1}{16} + \frac{V_1 - V_2}{4} \longrightarrow 48 = 5V_1 - 4V_2 \qquad (1)$$

At node 2,

$$\frac{V_1 - V_2}{4} + \frac{12 - V_2}{5} = 0 \longrightarrow 48 = -5V_1 + 9V_2 \qquad (2)$$

Solving (1) and (2) leads to

$$V_{Th} = V_2 = 19.2$$

Thus, the given circuit can be replaced as shown below.

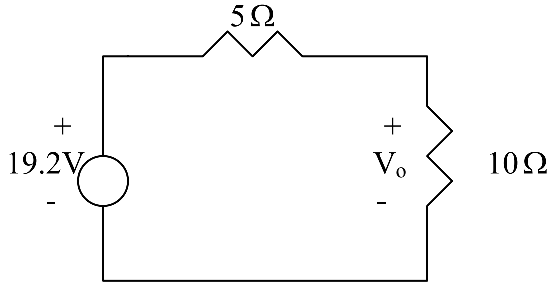

Using voltage division,

$$V_o = \frac{10}{10+5}(19.2) = 12.8 \text{ V}$$

Chapter 4, Solution 39.

To find R_{Th}, consider the circuit in Fig. (a).

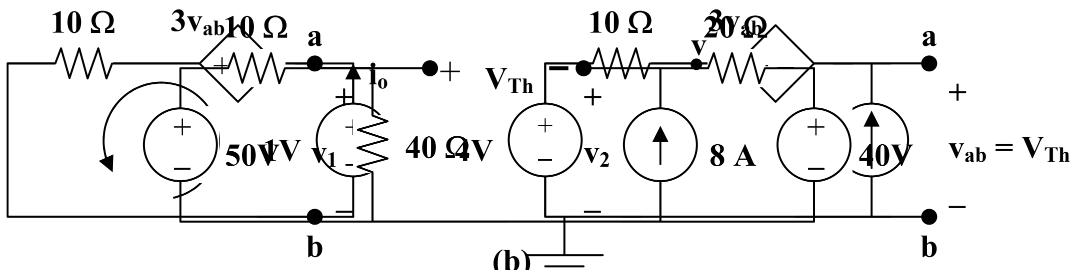

(a) (b)

$$-1 - 3 + 10i_o = 0, \text{ or } i_o = 0.4$$

$$R_{Th} = 1/i_o = 2.5 \text{ ohms}$$

To find V_{Th}, consider the circuit shown in Fig. (b).

$$[(4 - v)/10] + 2 = 0, \text{ or } v = 24$$

But, $v = V_{Th} + 3v_{ab} = 4V_{Th} = 24$, which leads to $V_{Th} =$ **<u>6 V</u>**

Chapter 4, Solution 40.

To find R_{Th}, consider the circuit in Fig. (a).

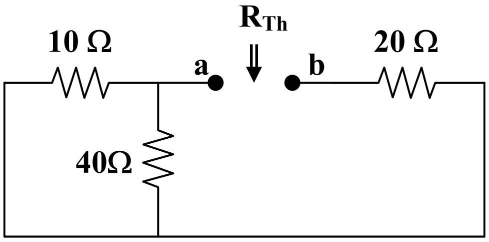

(a)

$$R_{Th} = 10||40 + 20 = 28 \text{ ohms}$$

To get V_{Th}, consider the circuit in Fig. (b). The two loops are independent. From loop 1,

$$v_1 = (40/50)50 = 40 \text{ V}$$

For loop 2, $-v_2 + 20x8 + 40 = 0, \text{ or } v_2 = 200$

But, $V_{Th} + v_2 - v_1 = 0, \quad V_{Th} = v_1 = v_2 = 40 - 200 = -160 \text{ volts}$

This results in the following equivalent circuit.

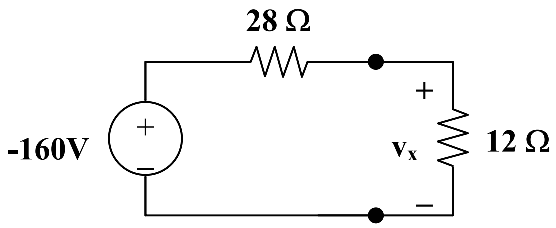

$$v_x = [12/(12 + 28)](-160) = \underline{\mathbf{-48\ V}}$$

Chapter 4, Solution 41

To find R_{Th}, consider the circuit below

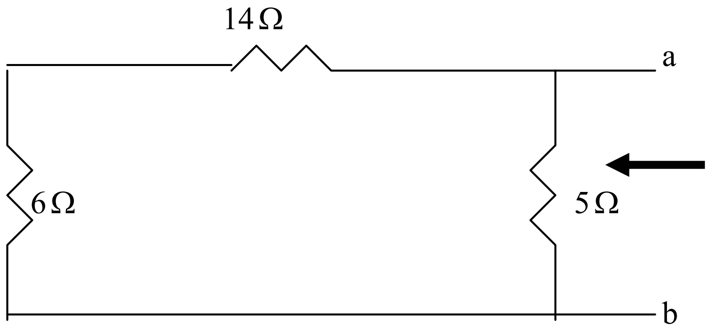

$$R_{Th} = 5//(14 + 6) = 4\Omega = R_N$$

Applying source transformation to the 1-A current source, we obtain the circuit below.

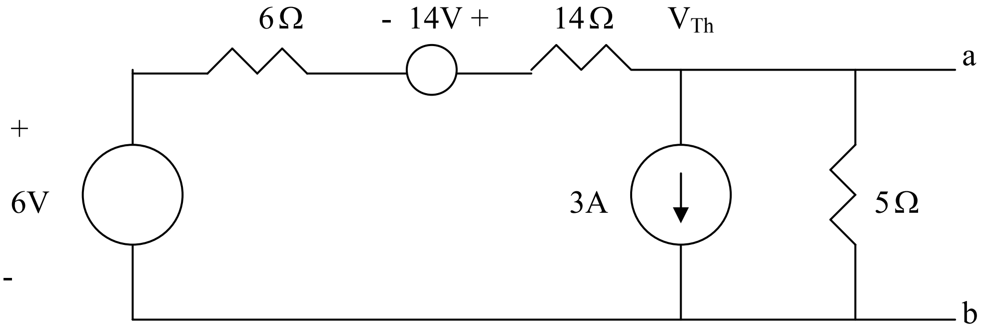

At node a,

$$\frac{14+6-V_{Th}}{6+14} = 3 + \frac{V_{Th}}{5} \longrightarrow V_{Th} = -8\text{ V}$$

$$I_N = \frac{V_{Th}}{R_{Th}} = (-8)/4 = -2\text{ A}$$

Thus,

$$\underline{R_{Th} = R_N = 4\Omega, \quad V_{Th} = -8\text{V}, \quad I_N = -2\text{ A}}$$

Chapter 4, Solution 42.

To find R_{Th}, consider the circuit in Fig. (a).

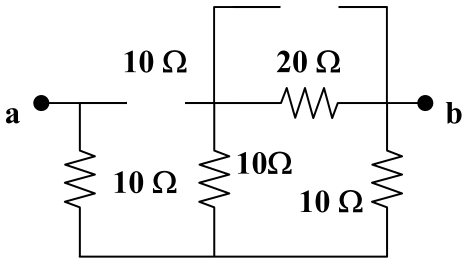

(a)

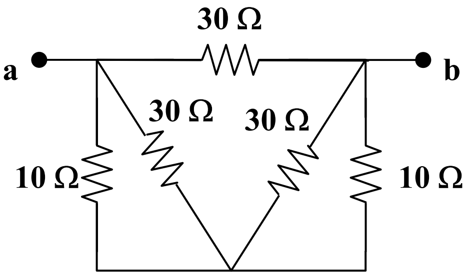

(b)

20||20 = 10 ohms. Transform the wye sub-network to a delta as shown in Fig. (b). 10||30 = 7.5 ohms. R_{Th} = R_{ab} = 30||(7.5 + 7.5) = **<u>10 ohms</u>**.

To find V_{Th}, we transform the 20-V and the 5-V sources. We obtain the circuit shown in Fig. (c).

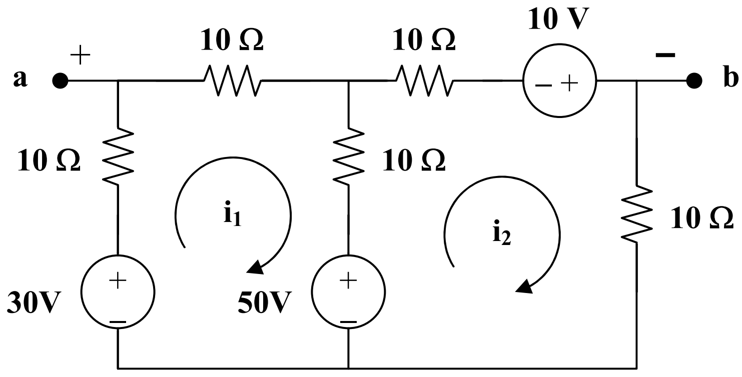

(c)

For loop 1, $-30 + 50 + 30i_1 - 10i_2 = 0$, or $-2 = 3i_1 - i_2$ (1)

For loop 2, $-50 - 10 + 30i_2 - 10i_1 = 0$, or $6 = -i_1 + 3i_2$ (2)

Solving (1) and (2), $i_1 = 0$, $i_2 = 2$ A

Applying KVL to the output loop, $-v_{ab} - 10i_1 + 30 - 10i_2 = 0$, $v_{ab} = 10$ V

$V_{Th} = v_{ab} =$ **<u>10 volts</u>**

Chapter 4, Solution 43.

To find R_{Th}, consider the circuit in Fig. (a).

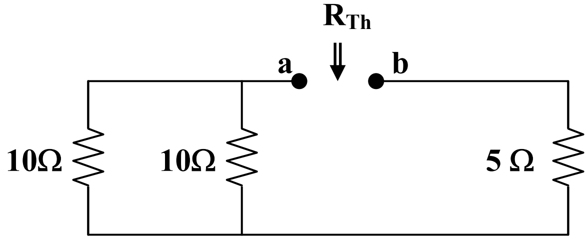

(a)

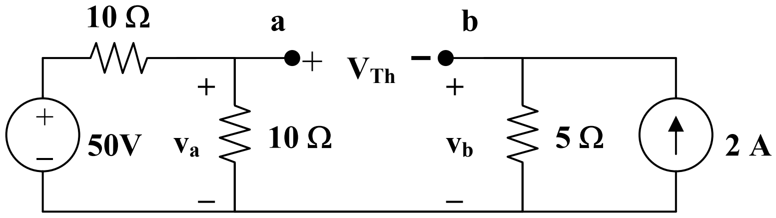

(b)

$R_{Th} = 10||10 + 5 =$ **<u>10 ohms</u>**

To find V_{Th}, consider the circuit in Fig. (b).

$$v_b = 2x5 = 10\text{ V},\ v_a = 20/2 = 10\text{ V}$$

But, $-v_a + V_{Th} + v_b = 0$, or $V_{Th} = v_a - v_b =$ **<u>0 volts</u>**

Chapter 4, Solution 44.

(a) For R_{Th}, consider the circuit in Fig. (a).

$$R_{Th} = 1 + 4||(3 + 2 + 5) = \underline{\mathbf{3.857\ ohms}}$$

For V_{Th}, consider the circuit in Fig. (b). Applying KVL gives,

$$10 – 24 + i(3 + 4 + 5 + 2),\ \text{or } i = 1$$

$$V_{Th} = 4i = \underline{\mathbf{4\ V}}$$

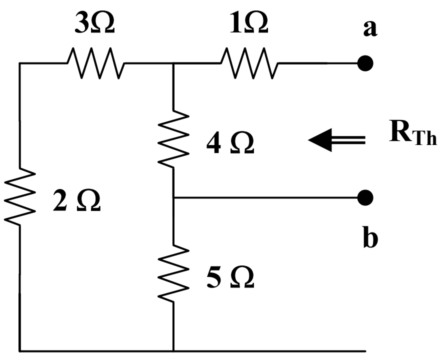

(a)

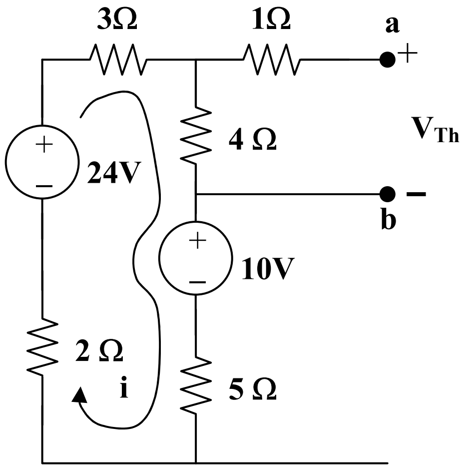

(b)

(b) For R_{Th}, consider the circuit in Fig. (c).

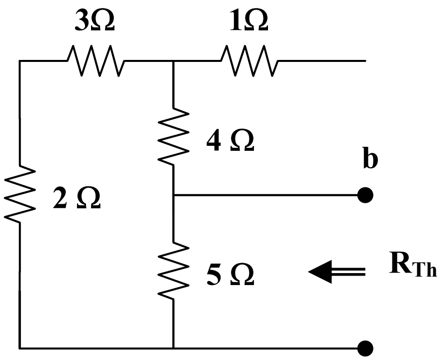

(c)

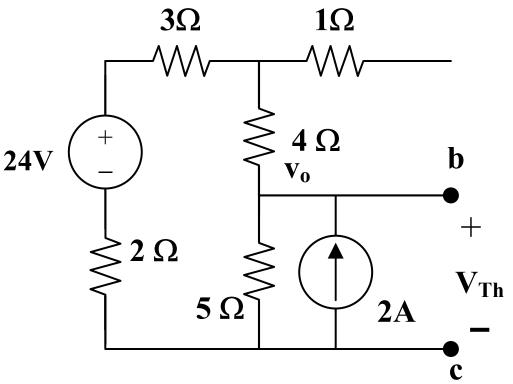

(d)

$$R_{Th} = 5||(2 + 3 + 4) = \underline{\textbf{3.214 ohms}}$$

To get V_{Th}, consider the circuit in Fig. (d). At the node, KCL gives,

$$[(24 - vo)/9] + 2 = vo/5, \text{ or } vo = 15$$

$$V_{Th} = vo = \underline{\textbf{15 V}}$$

Chapter 4, Solution 45.

For R_N, consider the circuit in Fig. (a).

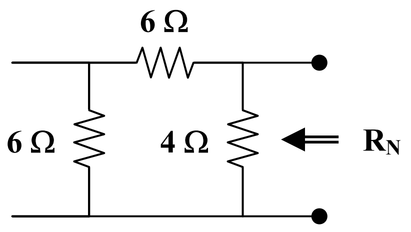

(a)

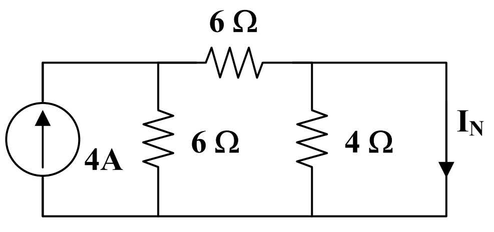

(b)

$$R_N = (6 + 6)||4 = 3 \text{ ohms}$$

For I_N, consider the circuit in Fig. (b). The 4-ohm resistor is shorted so that 4-A current is equally divided between the two 6-ohm resistors. Hence,

$I_N = 4/2 = \underline{\textbf{2 A}}$

Chapter 4, Solution 46.

(a) $R_N = R_{Th} = \underline{\textbf{8 ohms}}$. To find I_N, consider the circuit in Fig. (a).

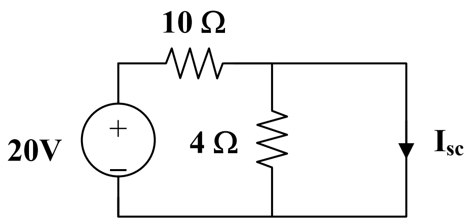

(a)

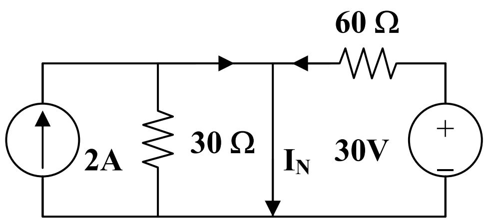

(b)

$$I_N = I_{sc} = 20/10 = \underline{\textbf{2 A}}$$

(b) To get I_N, consider the circuit in Fig. (b).

$I_N = I_{sc} = 2 + 30/60 = \underline{\textbf{2.5 A}}$

Chapter 4, Solution 47

Since $V_{Th} = V_{ab} = V_x$, we apply KCL at the node a and obtain

$$\frac{30 - V_{Th}}{12} = \frac{V_{Th}}{60} + 2V_{Th} \longrightarrow V_{Th} = 150/126 = 1.19\text{ V}$$

To find R_{Th}, consider the circuit below.

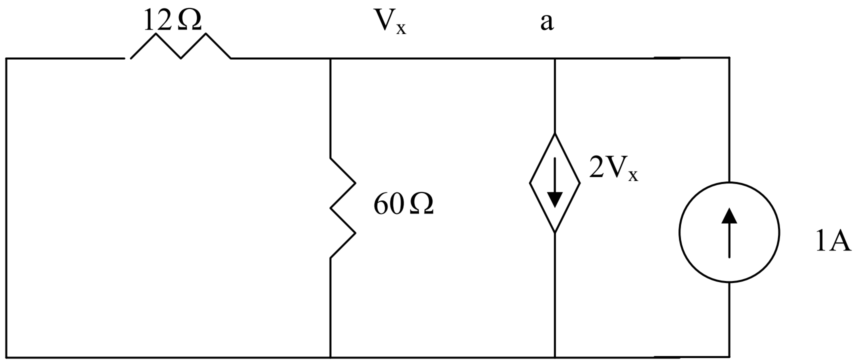

At node a, KCL gives

$$1 = 2V_x + \frac{V_x}{60} + \frac{V_x}{12} \longrightarrow V_x = 60/126 = 0.4762$$

$$R_{Th} = \frac{V_x}{1} = 0.4762\Omega, \quad I_N = \frac{V_{Th}}{R_{Th}} = 1.19/0.4762 = 2.5$$

Thus,

$$\underline{V_{Th} = 1.19V, \quad R_{Th} = R_N = 0.4762\Omega, \quad I_N = 2.5\text{ A}}$$

Chapter 4, Solution 48.

To get R_{Th}, consider the circuit in Fig. (a).

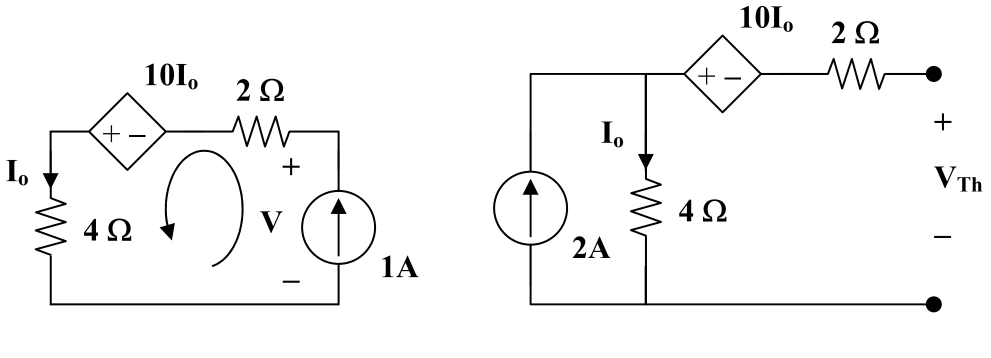

(a) (b)

From Fig. (a), $I_o = 1$, $6 - 10 - V = 0$, or $V = -4$

$$R_N = R_{Th} = V/1 = \underline{\textbf{-4 ohms}}$$

To get V_{Th}, consider the circuit in Fig. (b),

$$I_o = 2, \quad V_{Th} = -10I_o + 4I_o = -12 \text{ V}$$

$I_N = V_{Th}/R_{Th} = $ **3A**

Chapter 4, Solution 49.

$$R_N = R_{Th} = \underline{\textbf{28 ohms}}$$

To find I_N, consider the circuit below,

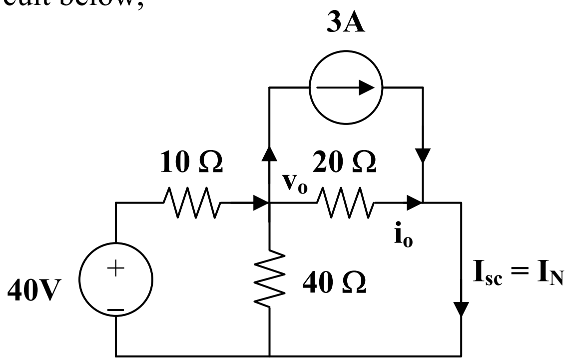

At the node, $(40 - v_o)/10 = 3 + (v_o/40) + (v_o/20)$, or $v_o = 40/7$

$i_o = v_o/20 = 2/7$, but $I_N = I_{sc} = i_o + 3 = $ **3.286 A**

Chapter 4, Solution 50.

From Fig. (a), $R_N = 6 + 4 = $ **10 ohms**

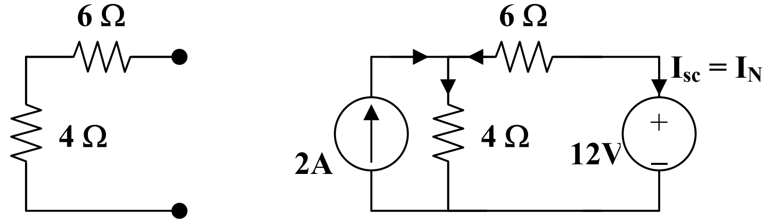

(a) (b)

From Fig. (b), $2 + (12 - v)/6 = v/4$, or $v = 9.6$ V

$$-I_N = (12 - v)/6 = 0.4, \text{ which leads to } I_N = \underline{\textbf{-0.4 A}}$$

Combining the Norton equivalent with the right-hand side of the original circuit produces the circuit in Fig. (c).

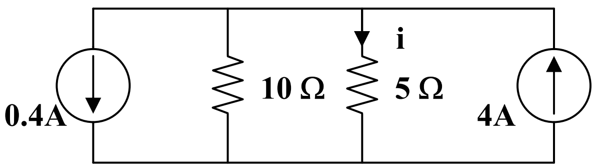

(c)

$i = [10/(10 + 5)]\,(4 - 0.4) = \underline{\mathbf{2.4\ A}}$

Chapter 4, Solution 51.

(a) From the circuit in Fig. (a),

$$R_N = 4||(2 + 6||3) = 4||4 = \underline{\mathbf{2\ ohms}}$$

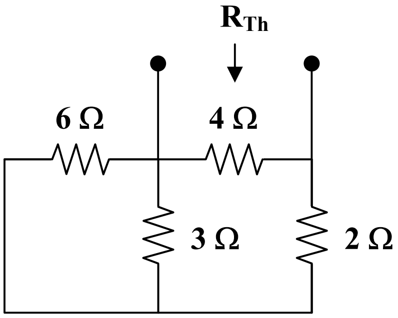

(a)

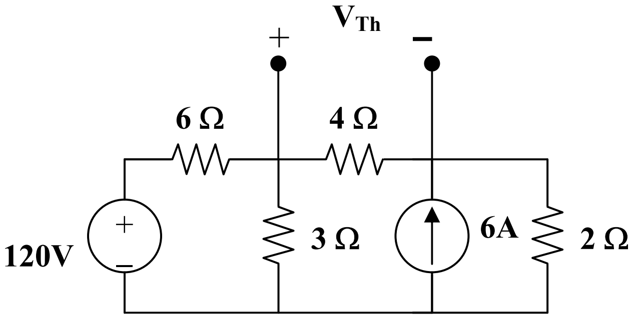

(b)

For I_N or V_{Th}, consider the circuit in Fig. (b). After some source transformations, the circuit becomes that shown in Fig. (c).

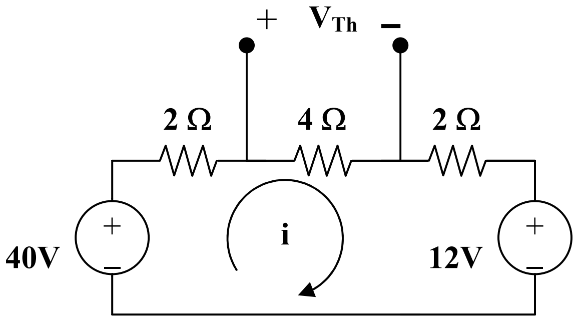

(c)

Applying KVL to the circuit in Fig. (c),

$$-40 + 8i + 12 = 0 \text{ which gives } i = 7/2$$

$$V_{Th} = 4i = 14 \text{ therefore } I_N = V_{Th}/R_N = 14/2 = \underline{\mathbf{7\ A}}$$

(b) To get R_N, consider the circuit in Fig. (d).

$$R_N = 2||(4 + 6||3) = 2||6 = \underline{\textbf{1.5 ohms}}$$

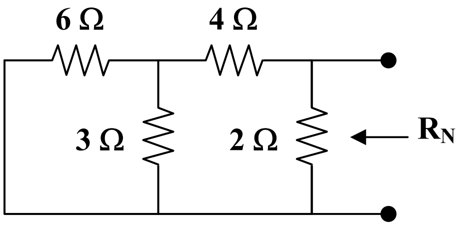

(d)

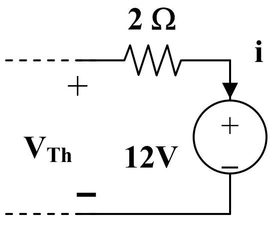

(e)

To get I_N, the circuit in Fig. (c) applies except that it needs slight modification as in Fig. (e).

$$i = 7/2,\ V_{Th} = 12 + 2i = 19,\ I_N = V_{Th}/R_N = 19/1.5 = \underline{\textbf{12.667 A}}$$

Chapter 4, Solution 52.

For R_{Th}, consider the circuit in Fig. (a).

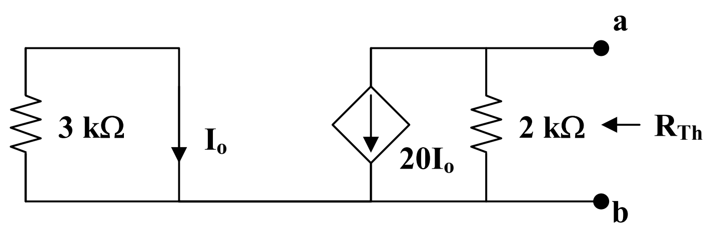

(a)

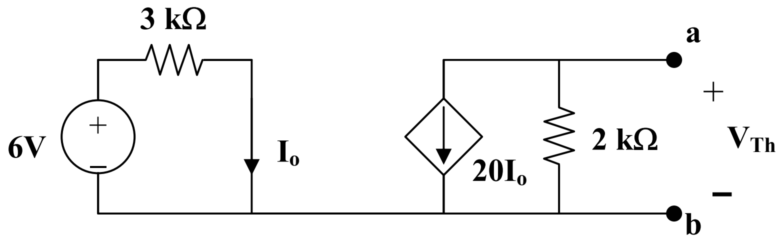

(b)

For Fig. (a), $I_o = 0$, hence the current source is inactive and

$$R_{Th} = \underline{\textbf{2 k ohms}}$$

For V_{Th}, consider the circuit in Fig. (b).

$$I_o = 6/3k = 2 \text{ mA}$$

$V_{Th} = (-20I_o)(2k) = -20x2x10^{-3}x2x10^{3} = \underline{\textbf{-80 V}}$

Chapter 4, Solution 53.

To get R_{Th}, consider the circuit in Fig. (a).

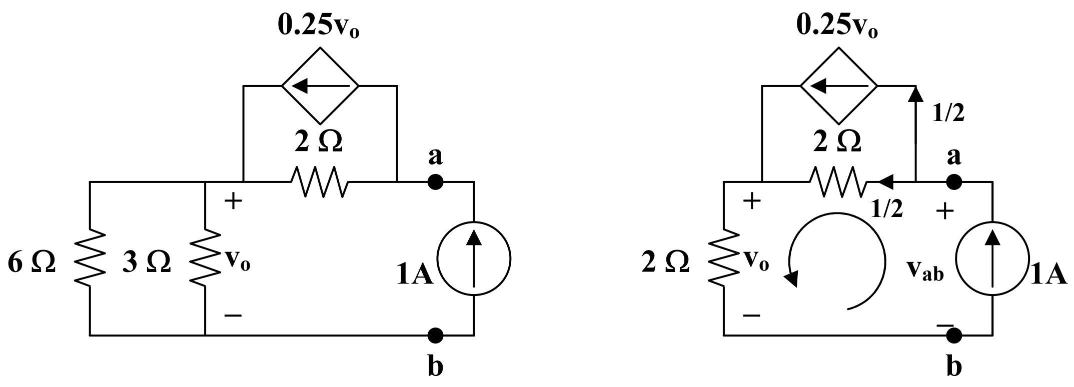

(a) **(b)**

From Fig. (b),

$$v_o = 2x1 = 2V, \; -v_{ab} + 2x(1/2) + v_o = 0$$

$$v_{ab} = 3V$$

$$R_N = v_{ab}/1 = \underline{\textbf{3 ohms}}$$

To get I_N, consider the circuit in Fig. (c).

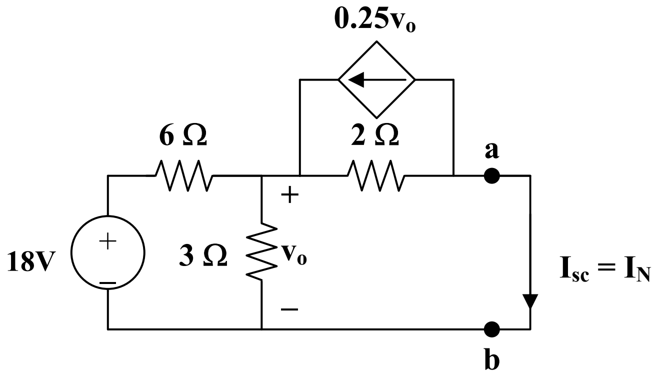

(c)

$$[(18 - v_o)/6] + 0.25v_o = (v_o/2) + (v_o/3) \text{ or } v_o = 4V$$

But, $(v_o/2) = 0.25v_o + I_N$, which leads to $I_N = \underline{\textbf{1 A}}$

Chapter 4, Solution 54

To find $V_{Th}=V_x$, consider the left loop.

$$-3+1000i_o+2V_x=0 \longrightarrow 3=1000i_o+2V_x \qquad (1)$$

For the right loop,

$$V_x=-50x40i_o=-2000i_o \qquad (2)$$

Combining (1) and (2),

$$3=1000i_o-4000i_o=-3000i_o \longrightarrow i_o=-1\text{mA}$$

$$V_x=-2000i_o=2 \longrightarrow \underline{V_{Th}=2}$$

To find R_{Th}, insert a 1-V source at terminals a-b and remove the 3-V independent source, as shown below.

.

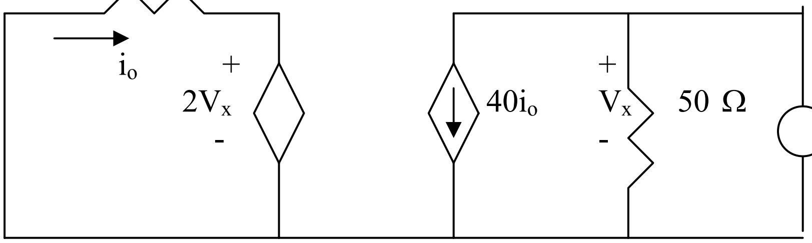

$$V_x=1, \quad i_o=-\frac{2V_x}{1000}=-2\text{mA}$$

$$i_x=40i_o+\frac{V_x}{50}=-80\text{mA}+\frac{1}{50}\text{A}=\text{-60mA}$$

$$R_{Th}=\frac{1}{i_x}=-1/0.060=\underline{-16.67\Omega}$$

Chapter 4, Solution 55.

To get R_N, apply a 1 mA source at the terminals a and b as shown in Fig. (a).

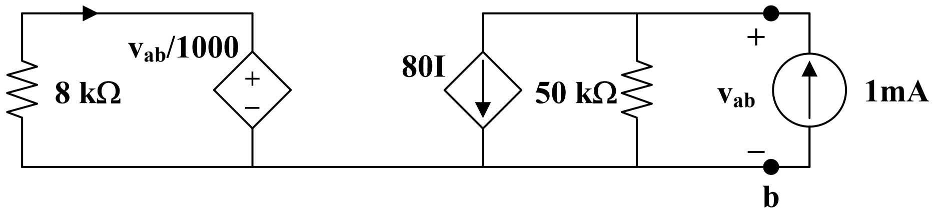

(a)

We assume all resistances are in k ohms, all currents in mA, and all voltages in volts. At node a,

$$(v_{ab}/50) + 80I = 1 \qquad (1)$$

Also,

$$-8I = (v_{ab}/1000), \text{ or } I = -v_{ab}/8000 \qquad (2)$$

From (1) and (2), $(v_{ab}/50) - (80v_{ab}/8000) = 1$, or $v_{ab} = 100$

$$R_N = v_{ab}/1 = \underline{\mathbf{100\ k\ ohms}}$$

To get I_N, consider the circuit in Fig. (b).

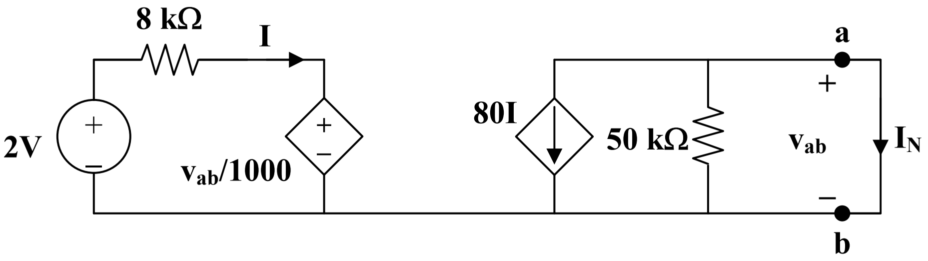

(b)

Since the 50-k ohm resistor is shorted,

$$I_N = -80I, \ v_{ab} = 0$$

Hence, $8i = 2$ which leads to $I = (1/4)$ mA

$I_N = \underline{\mathbf{-20\ mA}}$

Chapter 4, Solution 56.

We first need R_N and I_N.

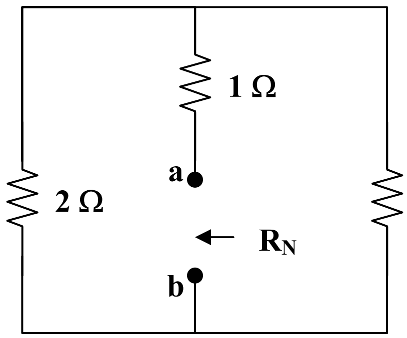

(a)

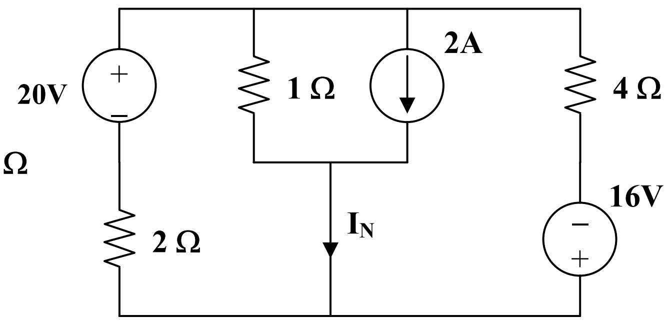

(b)

To find R_N, consider the circuit in Fig. (a).

$$R_N = 1 + 2||4 = (7/3) \text{ ohms}$$

To get I_N, short-circuit ab and find I_{sc} from the circuit in Fig. (b). The current source can be transformed to a voltage source as shown in Fig. (c).

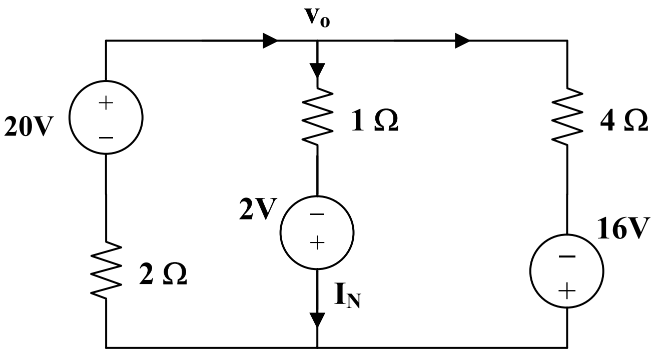

(c)

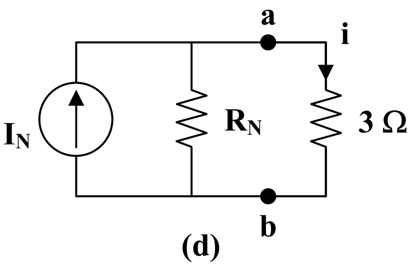

(d)

$$(20 - v_o)/2 = [(v_o + 2)/1] + [(v_o + 16)/4], \text{ or } v_o = 16/7$$

$$I_N = (v_o + 2)/1 = 30/7$$

From the Norton equivalent circuit in Fig. (d),

$$i = R_N/(R_N + 3),\ I_N = [(7/3)/((7/3) + 3)](30/7) = 30/16 = \underline{\mathbf{1.875\ A}}$$

Chapter 4, Solution 57.

To find R_{Th}, remove the 50V source and insert a 1-V source at a – b, as shown in Fig. (a).

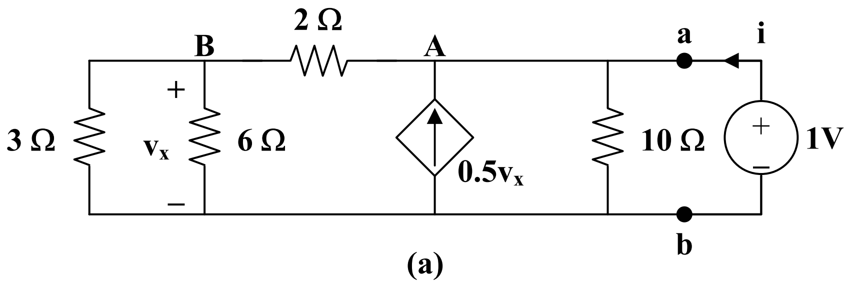

(a)

We apply nodal analysis. At node A,

$$i + 0.5v_x = (1/10) + (1 - v_x)/2, \text{ or } i + v_x = 0.6 \qquad (1)$$

At node B,

$$(1 - v_o)/2 = (v_x/3) + (v_x/6), \text{ and } v_x = 0.5 \qquad (2)$$

From (1) and (2),   i = 0.1 and

$$R_{Th} = 1/i = \underline{\textbf{10 ohms}}$$

To get V_{Th}, consider the circuit in Fig. (b).

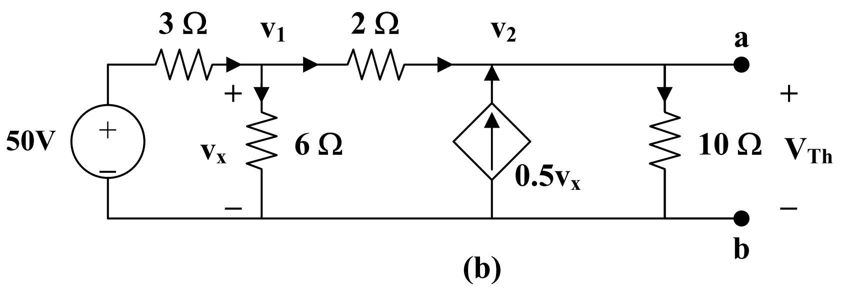

(b)

At node 1, $(50 - v_1)/3 = (v_1/6) + (v_1 - v_2)/2$, or $100 = 6v_1 - 3v_2$ (3)

At node 2, $0.5v_x + (v_1 - v_2)/2 = v_2/10$, $v_x = v_1$, and $v_1 = 0.6v_2$ (4)

From (3) and (4),

$$v_2 = V_{Th} = \underline{\textbf{166.67 V}}$$

$$I_N = V_{Th}/R_{Th} = \underline{\textbf{16.667 A}}$$

$$R_N = R_{Th} = \underline{\textbf{10 ohms}}$$

Chapter 4, Solution 58.

This problem does not have a solution as it was originally stated. The reason for this is that the load resistor is in series with a current source which means that the only equivalent circuit that will work will be a Norton circuit where the value of R_N = **<u>infinity</u>**. I_N can be found by solving for I_{sc}.

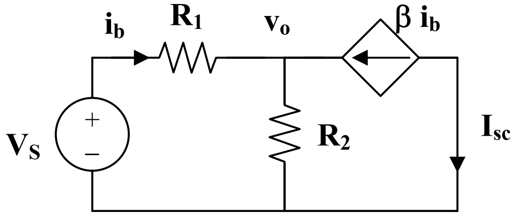

Writing the node equation at node vo,

$$i_b + \beta i_b = v_o/R_2 = (1 + \beta)i_b$$

But $i_b = (V_s – v_o)/R_1$

$$v_o = V_s – i_bR_1$$

$$V_s – i_bR_1 = (1 + \beta)R_2i_b, \text{ or } i_b = V_s/(R_1 + (1 + \beta)R_2)$$

$I_{sc} = I_N = -\beta i_b =$ **$-\beta V_s/(R_1 + (1 + \beta)R_2)$**

Chapter 4, Solution 59.

$R_{Th} = (10 + 20)||(50 + 40)\ \ 30||90 =$ **22.5 ohms**

To find V_{Th}, consider the circuit below.

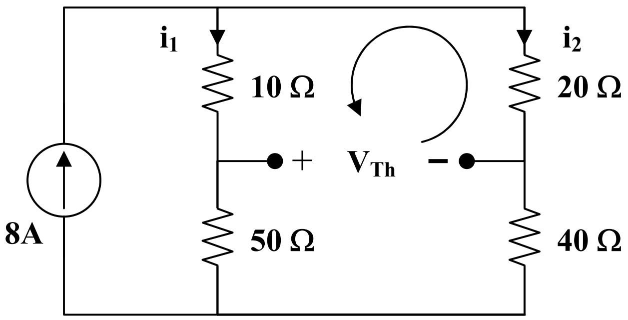

$i_1 = i_2 = 8/2 = 4,\ 10i_1 + V_{Th} – 20i_2 = 0, \text{ or } V_{Th} = 20i_2 –10i_1 = 10i_1 = 10x4$

$V_{Th} =$ **40V**, and $I_N = V_{Th}/R_{Th} = 40/22.5 =$ **1.7778 A**

Chapter 4, Solution 60.

The circuit can be reduced by source transformations.

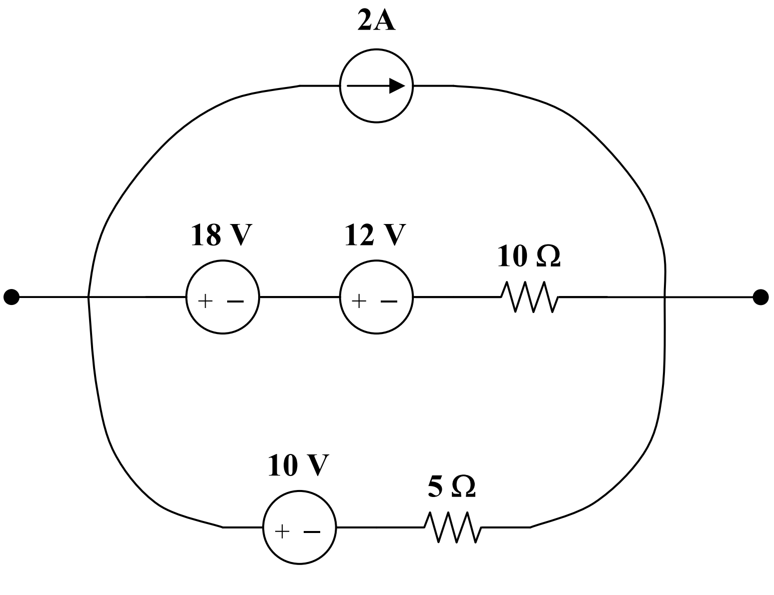

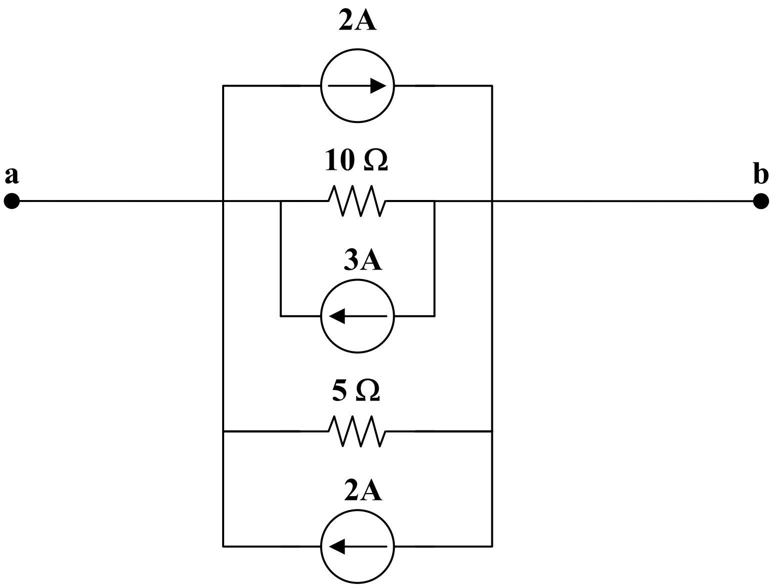

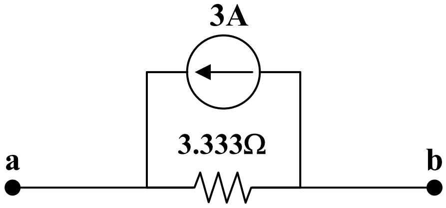

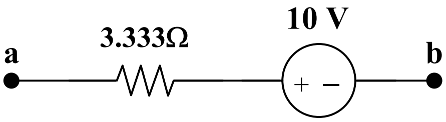

Norton Equivalent Circuit **Thevenin Equivalent Circuit**

Chapter 4, Solution 61.

To find R_{Th}, consider the circuit in Fig. (a).

Let $R = 2||18 =$ **<u>1.8 ohms</u>**, $R_{Th} = 2R||R = (2/3)R =$ **<u>1.2 ohms</u>**.

To get V_{Th}, we apply mesh analysis to the circuit in Fig. (d).

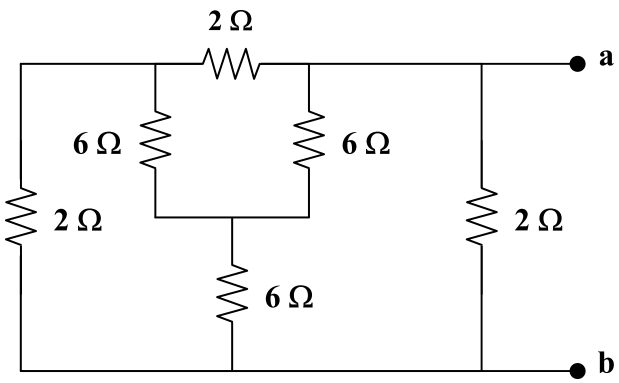

(a)

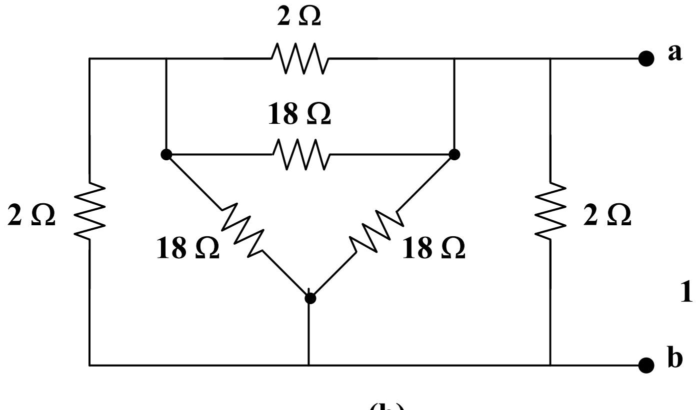

(b)

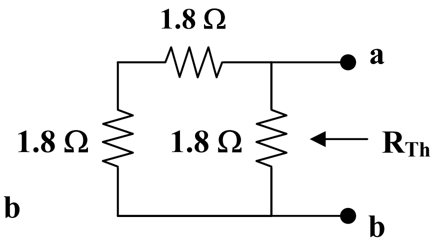

(c)

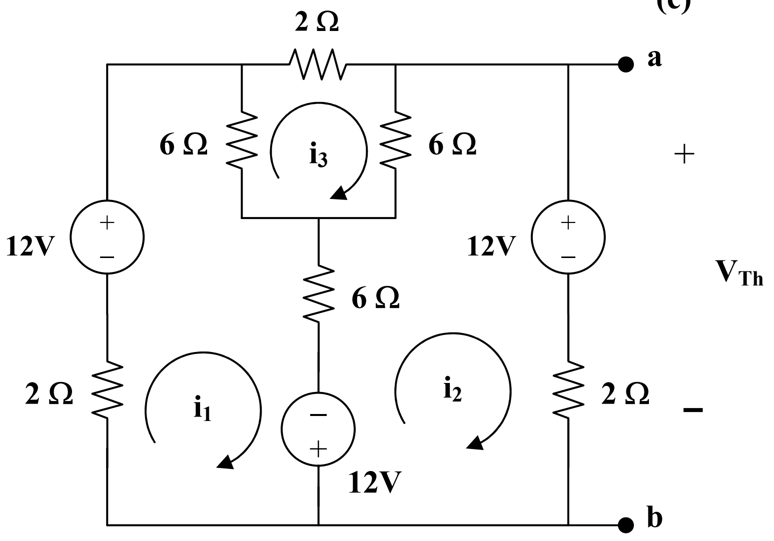

(d)

$-12 - 12 + 14i_1 - 6i_2 - 6i_3 = 0$, and $7 i_1 - 3 i_2 - 3i_3 = 12$ (1)

$12 + 12 + 14 i_2 - 6 i_1 - 6 i_3 = 0$, and $-3 i_1 + 7 i_2 - 3 i_3 = -12$ (2)

$14 i_3 - 6 i_1 - 6 i_2 = 0$, and $-3 i_1 - 3 i_2 + 7 i_3 = 0$ (3)

This leads to the following matrix form for (1), (2) and (3),

$$\begin{bmatrix} 7 & -3 & -3 \\ -3 & 7 & -3 \\ -3 & -3 & 7 \end{bmatrix}\begin{bmatrix} i_1 \\ i_2 \\ i_3 \end{bmatrix} = \begin{bmatrix} 12 \\ -12 \\ 0 \end{bmatrix}$$

$$\Delta = \begin{vmatrix} 7 & -3 & -3 \\ -3 & 7 & -3 \\ -3 & -3 & 7 \end{vmatrix} = 100, \qquad \Delta_2 = \begin{vmatrix} 7 & 12 & -3 \\ -3 & -12 & -3 \\ -3 & 0 & 7 \end{vmatrix} = -120$$

$$i_2 = \Delta/\Delta_2 = -120/100 = -1.2 \text{ A}$$

$V_{Th} = 12 + 2i_2 =$ **<u>9.6 V</u>**, and $I_N = V_{Th}/R_{Th} =$ **<u>8 A</u>**

Chapter 4, Solution 62.

Since there are no independent sources, $V_{Th} = 0$ V
To obtain R_{Th}, consider the circuit below.

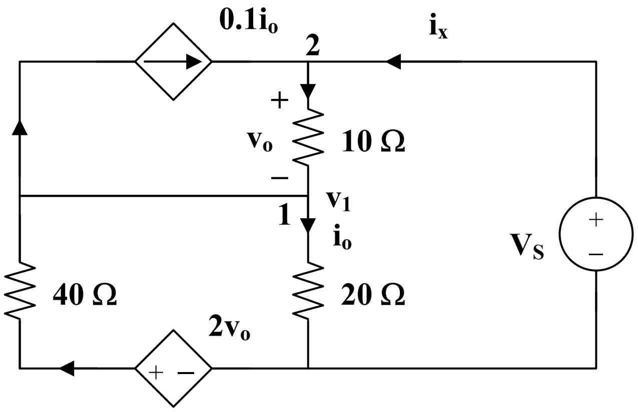

At node 2,

$$i_x + 0.1i_o = (1 - v_1)/10, \text{ or } 10i_x + i_o = 1 - v_1 \qquad (1)$$

At node 1,

$$(v_1/20) + 0.1i_o = [(2v_o - v_1)/40] + [(1 - v_1)/10] \qquad (2)$$

But $i_o = (v_1/20)$ and $v_o = 1 - v_1$, then (2) becomes,

$$1.1v_1/20 = [(2 - 3v_1)/40] + [(1 - v_1)/10]$$

$$2.2v_1 = 2 - 3v_1 + 4 - 4v_1 = 6 - 7v_1$$

or

$$v_1 = 6/9.2 \qquad (3)$$

From (1) and (3),

$$10i_x + v_1/20 = 1 - v_1$$

$$10i_x = 1 - v_1 - v_1/20 = 1 - (21/20)v_1 = 1 - (21/20)(6/9.2)$$

$i_x = 31.52$ mA, $R_{Th} = 1/i_x =$ **<u>31.73 ohms.</u>**

Chapter 4, Solution 63.

Because there are no independent sources, $I_N = I_{sc} = \underline{\mathbf{0\ A}}$

R_N can be found using the circuit below.

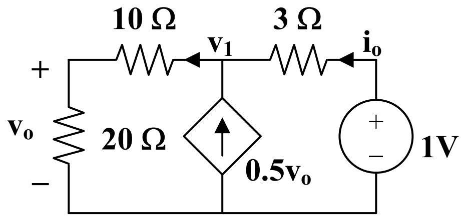

Applying KCL at node 1, $0.5v_o + (1 - v_1)/3 = v_1/30$, but $v_o = (20/30)v_1$

Hence, $0.5(2/3)(30)v_1 + 10 - 10v_1 = v_1$, or $v_1 = 10$ and $i_o = (1 - v_1)/3 = -3$

$R_N = 1/i_o = -1/3 = \underline{\mathbf{-333.3\ m\ ohms}}$

Chapter 4, Solution 64.

With no independent sources, $V_{Th} = \underline{\mathbf{0\ V}}$. To obtain R_{Th}, consider the circuit shown below.

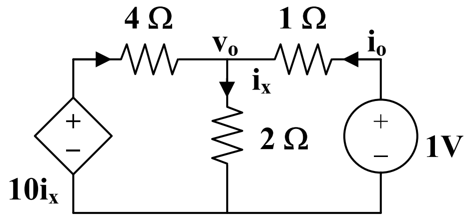

$$i_x = [(1 - v_o)/1] + [(10i_x - v_o)/4], \text{ or } 2v_o = 1 + 3i_x \qquad (1)$$

But $i_x = v_o/2$. Hence,

$$2v_o = 1 + 1.5v_o, \text{ or } v_o = 2, \ i_o = (1 - v_o)/1 = -1$$

Thus, $R_{Th} = 1/i_o = \underline{\mathbf{-1\ ohm}}$

Chapter 4, Solution 65

At the terminals of the unknown resistance, we replace the circuit by its Thevenin equivalent.

$R_{Th} = 2 + 4//12 = 2 + 3 = 5\Omega, \qquad V_{Th} = \frac{12}{12+4}(32) = 24\text{ V}$

Thus, the circuit can be replaced by that shown below.

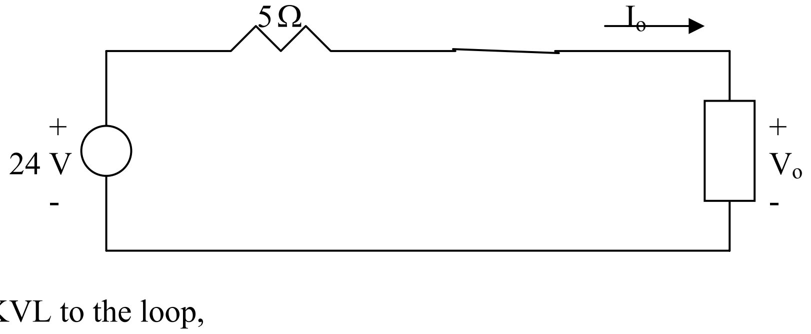

Applying KVL to the loop,

$$-24 + 5I_o + V_o = 0 \quad \longrightarrow \quad \underline{V_o = 24 - 5I_o}$$

Chapter 4, Solution 66.

We first find the Thevenin equivalent at terminals a and b. We find R_{Th} using the circuit in Fig. (a).

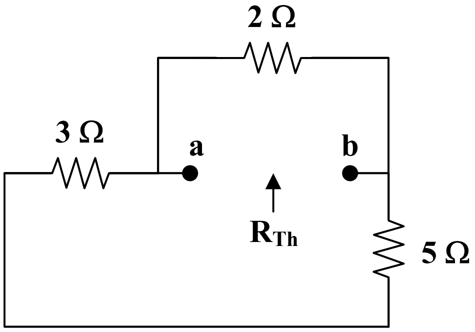

(a)

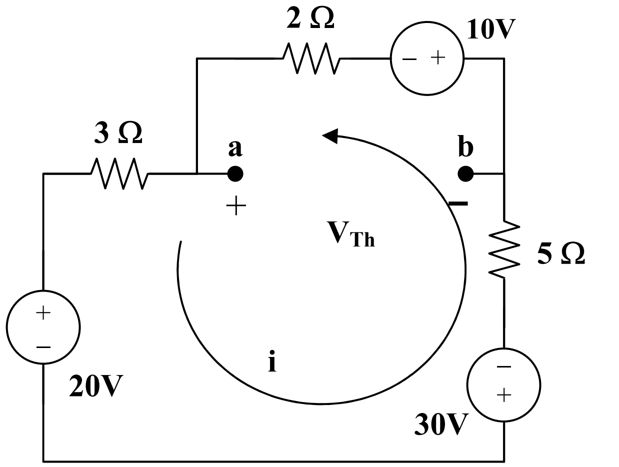

(b)

$R_{Th} = 2||(3 + 5) = 2||8 = \underline{\textbf{1.6 ohms}}$

By performing source transformation on the given circuit, we obatin the circuit in (b).

We now use this to find V_{Th}.

$$10i + 30 + 20 + 10 = 0, \text{ or } i = -5$$

$$V_{Th} + 10 + 2i = 0, \text{ or } V_{Th} = 2 \text{ V}$$

$$p = V_{Th}^2/(4R_{Th}) = (2)^2/[4(1.6)] = \underline{\textbf{625 m watts}}$$

Chapter 4, Solution 67.

We need to find the Thevenin equivalent at terminals a and b.

From Fig. (a),

$$R_{Th} = 4||6 + 8||12 = 2.4 + 4.8 = \underline{\textbf{7.2 ohms}}$$

From Fig. (b),

$$10i_1 - 30 = 0, \text{ or } i_1 = 3$$

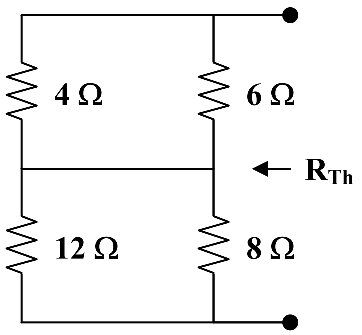

(a)

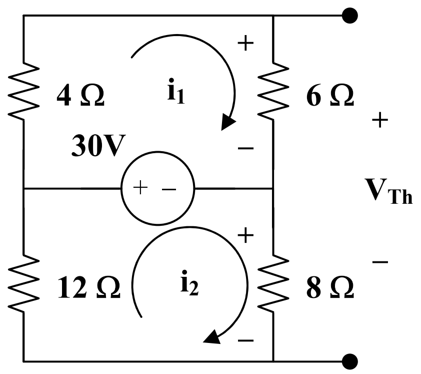

(b)

$$20i_2 + 30 = 0, \text{ or } i_2 = 1.5, \; V_{Th} = 6i_1 + 8i_2 = 6x3 - 8x1.5 = \underline{\textbf{6 V}}$$

For maximum power transfer,

$$p = V_{Th}^2/(4R_{Th}) = (6)^2/[4(7.2)] = \underline{\textbf{1.25 watts}}$$

Chapter 4, Solution 68.

This is a challenging problem in that the load is already specified. This now becomes a "minimize losses" style problem. When a load is specified and internal losses can be adjusted, then the objective becomes, reduce R_{Thev} as much as possible, which will result in maximum power transfer to the load.

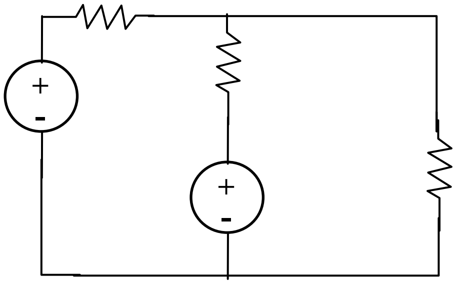

Removing the 10 ohm resistor and solving for the Thevenin Circuit results in:

$$R_{Th} = (Rx20/(R+20)) \text{ and a } V_{oc} = V_{Th} = 12x(20/(R+20)) + (-8)$$

As R goes to zero, R_{Th} goes to zero and V_{Th} goes to 4 volts, which produces the maximum power delivered to the 10-ohm resistor.

$$P = vi = v^2/R = 4x4/10 = 1.6 \text{ watts}$$

Notice that if R = 20 ohms which gives an R_{Th} = 10 ohms, then V_{Th} becomes -2 volts and the power delivered to the load becomes 0.1 watts, much less that the 1.6 watts.

It is also interesting to note that the internal losses for the first case are $12^2/20 = 7.2$ watts and for the second case are = to 12 watts. This is a significant difference.

Chapter 4, Solution 69.

We need the Thevenin equivalent across the resistor R. To find R_{Th}, consider the circuit below.

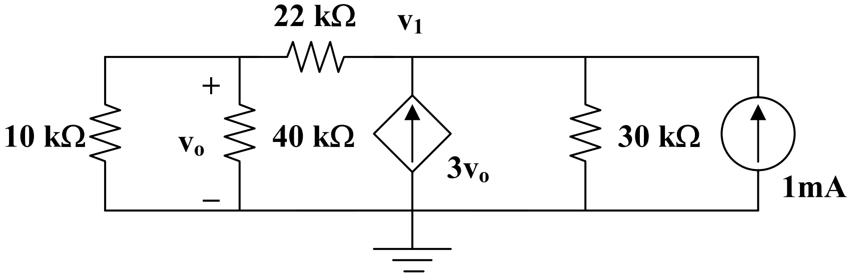

Assume that all resistances are in k ohms and all currents are in mA.

$$10||40 = 8, \text{ and } 8 + 22 = 30$$

$$1 + 3v_o = (v_1/30) + (v_1/30) = (v_1/15)$$

$$15 + 45v_o = v_1$$

But $v_o = (8/30)v_1$, hence,

$$15 + 45x(8v_1/30)\ v_1, \text{ which leads to } v_1 = 1.3636$$

$$R_{Th} = v_1/1 = -1.3636 \text{ k ohms}$$

To find V_{Th}, consider the circuit below.

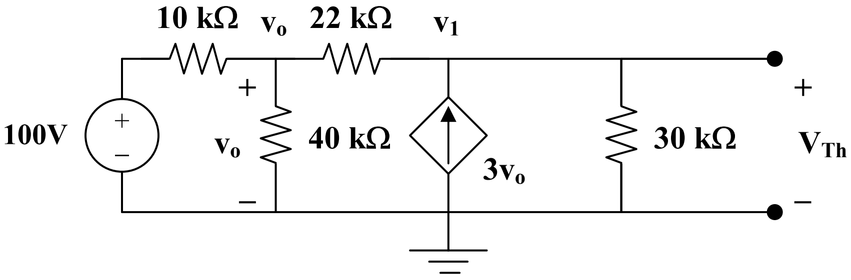

$$(100 - v_o)/10 = (v_o/40) + (v_o - v_1)/22 \qquad (1)$$

$$[(v_o - v_1)/22] + 3v_o = (v_1/30) \qquad (2)$$

Solving (1) and (2),

$$v_1 = V_{Th} = -243.6 \text{ volts}$$

$p = V_{Th}^2/(4R_{Th}) = (243.6)2/[4(-1363.6)] =$ **-10.882 watts**

Chapter 4, Solution 70

We find the Thevenin equivalent across the 10-ohm resistor. To find V_{Th}, consider the circuit below.

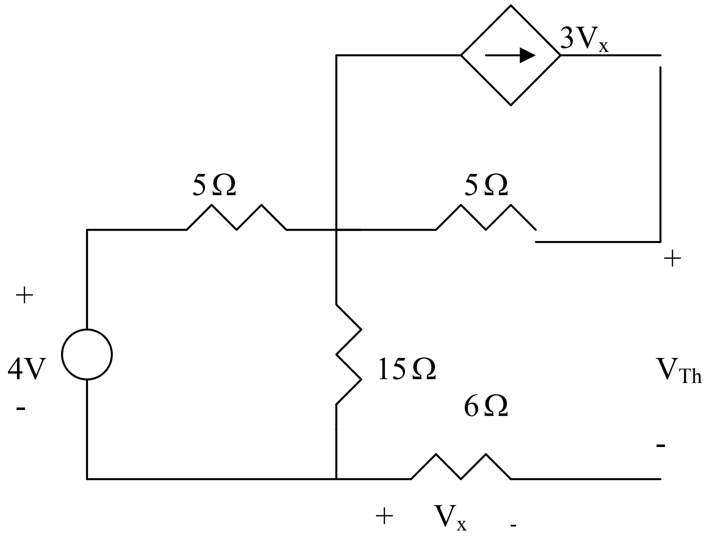

From the figure,

$$V_x = 0, \qquad V_{Th} = \frac{15}{15+5}(4) = 3\text{V}$$

To find $R_{Th,}$ consider the circuit below:

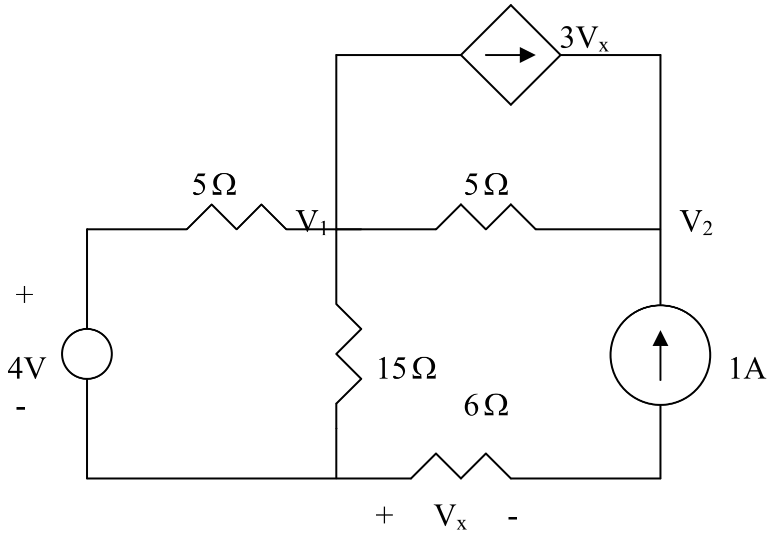

At node 1,

$$\frac{4-V_1}{5} = 3V_x + \frac{V_1}{15} + \frac{V_1 - V_2}{5}, \qquad V_x = 6x1 = 6 \longrightarrow \qquad 258 = 3V_2 - 7V_1 \qquad (1)$$

At node 2,

$$1+3V_x+\frac{V_1-V_2}{5}=0 \longrightarrow V_1=V_2-95 \qquad (2)$$

Solving (1) and (2) leads to V_2 = 101.75 V

$$R_{Th}=\frac{V_2}{1}=101.75\Omega, \qquad p_{\max}=\frac{V_{Th}^{\ 2}}{4R_{Th}}=\frac{9}{4x101.75}=\underline{22.11\,\text{mW}}$$

Chapter 4, Solution 71.

We need R_{Th} and V_{Th} at terminals a and b. To find R_{Th}, we insert a 1-mA source at the terminals a and b as shown below.

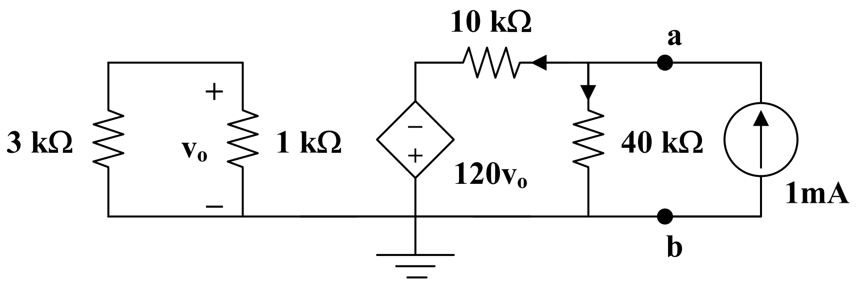

Assume that all resistances are in k ohms, all currents are in mA, and all voltages are in volts. At node a,

$$1 = (v_a/40) + [(v_a + 120v_o)/10], \text{ or } 40 = 5v_a + 480v_o \qquad (1)$$

The loop on the left side has no voltage source. Hence, v_o = 0. From (1), v_a = 8 V.

$$R_{Th} = v_a/1\text{ mA} = 8 \text{ kohms}$$

To get V_{Th}, consider the original circuit. For the left loop,

$$v_o = (1/4)8 = 2\text{ V}$$

For the right loop, $v_R = V_{Th} = (40/50)(-120v_o) = -192$

The resistance at the required resistor is

$$R = R_{Th} = \underline{\textbf{8 kohms}}$$

$$p = V_{Th}^2/(4R_{Th}) = (-192)^2/(4x8x10^3) = \underline{\textbf{1.152 watts}}$$

Chapter 4, Solution 72.

(a) R_{Th} and V_{Th} are calculated using the circuits shown in Fig. (a) and (b) respectively.

From Fig. (a), $R_{Th} = 2 + 4 + 6 =$ **<u>12 ohms</u>**

From Fig. (b), $-V_{Th} + 12 + 8 + 20 = 0$, or $V_{Th} =$ **<u>40 V</u>**

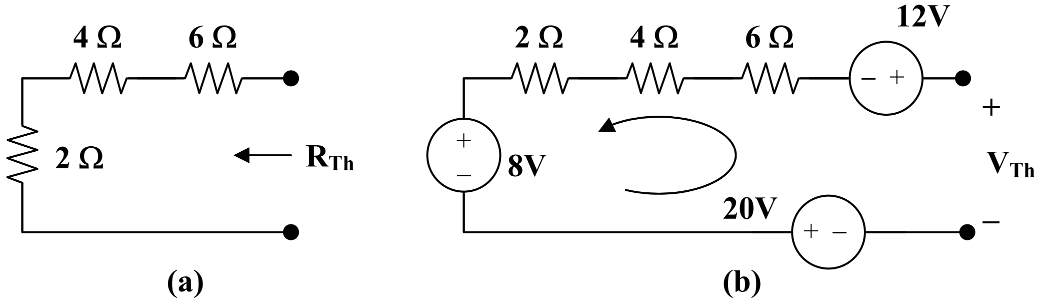

(b) $i = V_{Th}/(R_{Th} + R) = 40/(12 + 8) =$ **<u>2A</u>**

(c) For maximum power transfer, $R_L = R_{Th} =$ **<u>12 ohms</u>**

(d) $p = V_{Th}^2/(4R_{Th}) = (40)^2/(4x12) =$ **<u>33.33 watts</u>**.

Chapter 4, Solution 73

Find the Thevenin's equivalent circuit across the terminals of R.

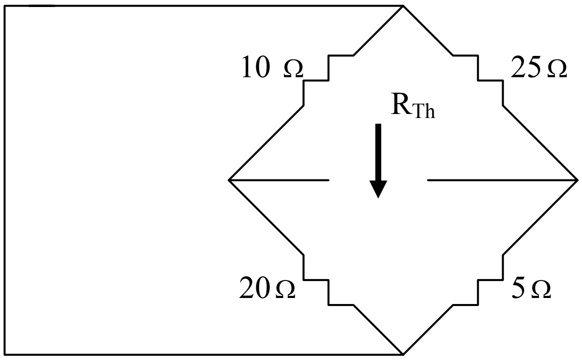

$$R_{Th} = 10 // 20 + 25 // 5 = 325 / 30 = 10.833\Omega$$

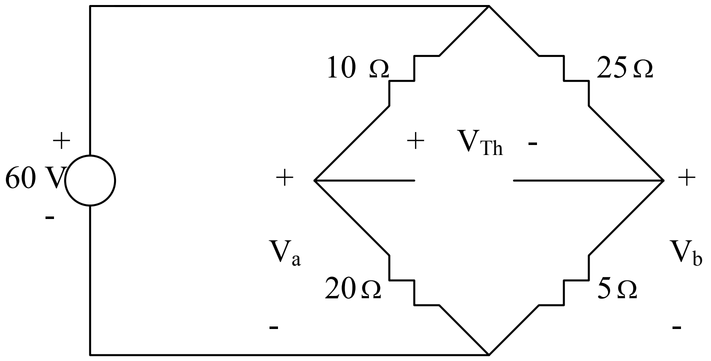

$$V_a = \frac{20}{30}(60) = 40, \qquad V_b = \frac{5}{30}(60) = 10$$

$$-V_a + V_{Th} + V_b = 0 \quad \longrightarrow \quad V_{Th} = V_a - V_b = 40 - 10 = 30\text{ V}$$

$$p_{max} = \frac{V_{Th}^{\ 2}}{4R_{Th}} = \frac{30^2}{4x10.833} = \underline{20.77\text{ W}}$$

Chapter 4, Solution 74.

When R_L is removed and V_s is short-circuited,

$$R_{Th} = R_1||R_2 + R_3||R_4 = [R_1 R_2/(R_1 + R_2)] + [R_3 R_4/(R_3 + R_4)]$$

$$R_L = R_{Th} = \underline{\mathbf{(R_1 R_2 R_3 + R_1 R_2 R_4 + R_1 R_3 R_4 + R_2 R_3 R_4)/[(R_1 + R_2)(R_3 + R_4)]}}$$

When R_L is removed and we apply the voltage division principle,

$$V_{oc} = V_{Th} = v_{R2} - v_{R4}$$

$$= ([R_2/(R_1 + R_2)] - [R_4/(R_3 + R_4)])V_s = \{[(R_2R_3) - (R_1R_4)]/[(R_1 + R_2)(R_3 + R_4)]\}V_s$$

$$p_{max} = V_{Th}^2/(4R_{Th})$$

$$= \{[(R_2R_3) - (R_1R_4)]^2/[(R_1 + R_2)(R_3 + R_4)]^2\}V_s^2[(R_1 + R_2)(R_3 + R_4)]/[4(a)]$$

where $a = (R_1 R_2 R_3 + R_1 R_2 R_4 + R_1 R_3 R_4 + R_2 R_3 R_4)$

$p_{max} =$

$$\underline{\mathbf{[(R_2R_3) - (R_1R_4)]^2V_s^2/[4(R_1 + R_2)(R_3 + R_4)(R_1 R_2 R_3 + R_1 R_2 R_4 + R_1 R_3 R_4 + R_2 R_3 R_4)]}}$$

Chapter 4, Solution 75.

We need to first find R_{Th} and V_{Th}.

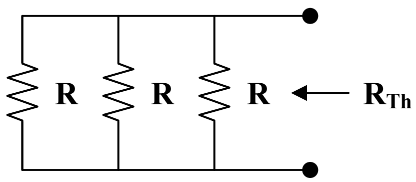

(a)

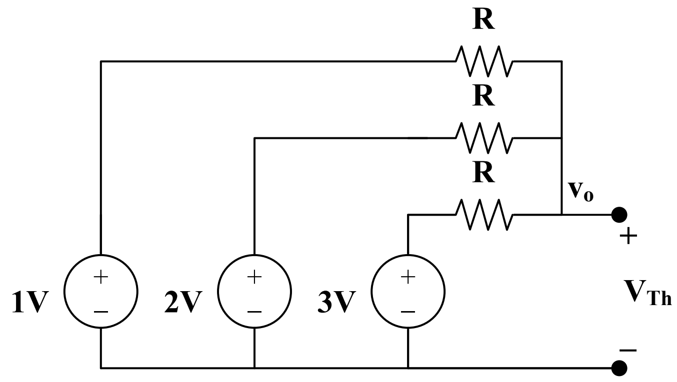

(b)

Consider the circuit in Fig. (a).

$$(1/R_{Th}) = (1/R) + (1/R) + (1/R) = 3/R$$

$$R_{Th} = R/3$$

From the circuit in Fig. (b),

$$((1 - v_o)/R) + ((2 - v_o)/R) + ((3 - v_o)/R) = 0$$

$$v_o = 2 = V_{Th}$$

For maximum power transfer,

$$R_L = R_{Th} = R/3$$

$$P_{max} = [(V_{Th})^2/(4R_{Th})] = 3 \text{ mW}$$

$$R_{Th} = [(V_{Th})^2/(4P_{max})] = 4/(4xP_{max}) = 1/P_{max} = R/3$$

$$R = 3/(3x10^{-3}) = \underline{\textbf{1 k ohms}}$$

Chapter 4, Solution 76.

Follow the steps in Example 4.14. The schematic and the output plots are shown below. From the plot, we obtain,

V = **92 V** [i = 0, voltage axis intercept]

R = Slope = (120 – 92)/1 = **28 ohms**

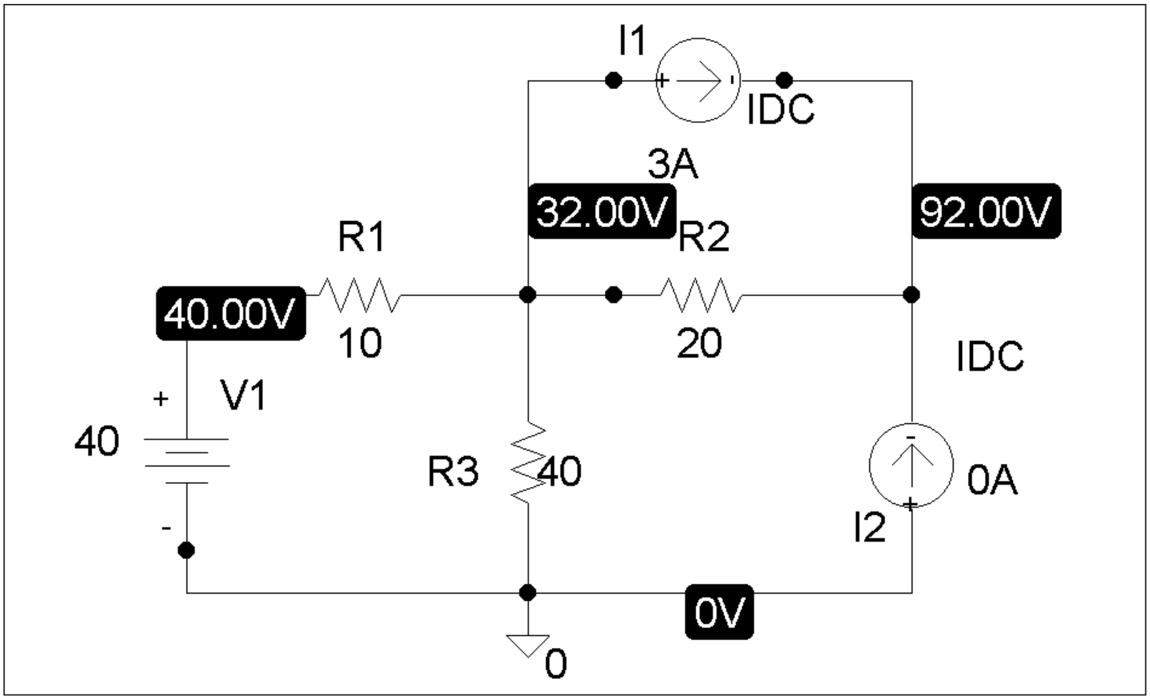

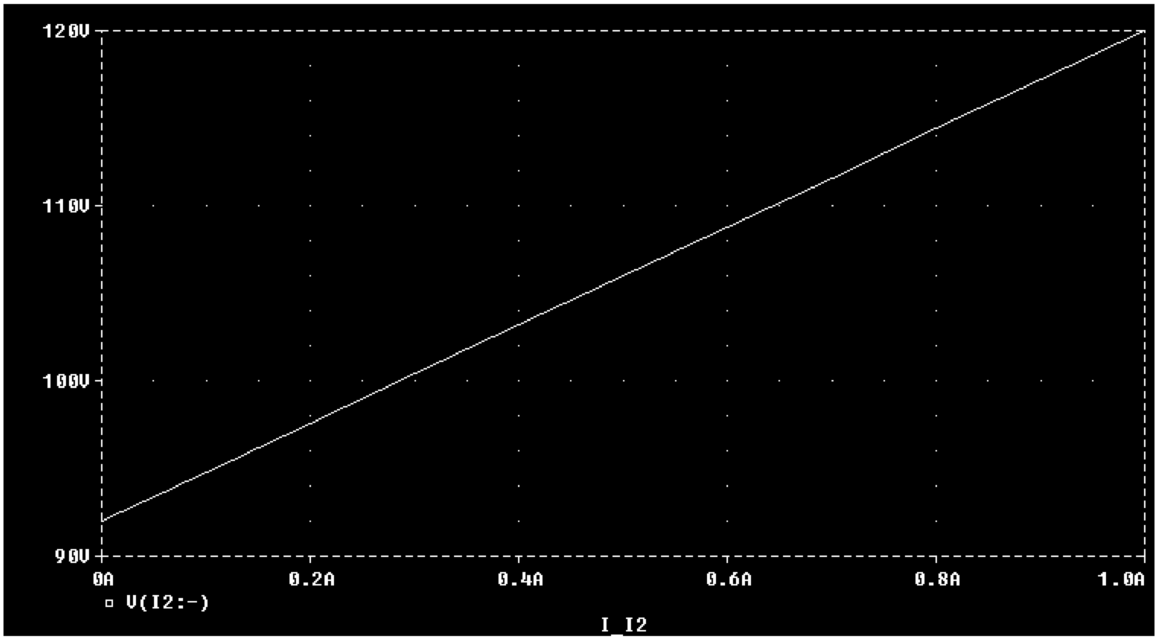

Chapter 4, Solution 77.

(a) The schematic is shown below. We perform a dc sweep on a current source, I1, connected between terminals a and b. We label the top and bottom of source I1 as 2 and 1 respectively. We plot V(2) – V(1) as shown.

$$V_{Th} = \underline{\mathbf{4\ V}} \text{ [zero intercept]}$$

$$R_{Th} = (7.8 - 4)/1 = \underline{\mathbf{3.8\ ohms}}$$

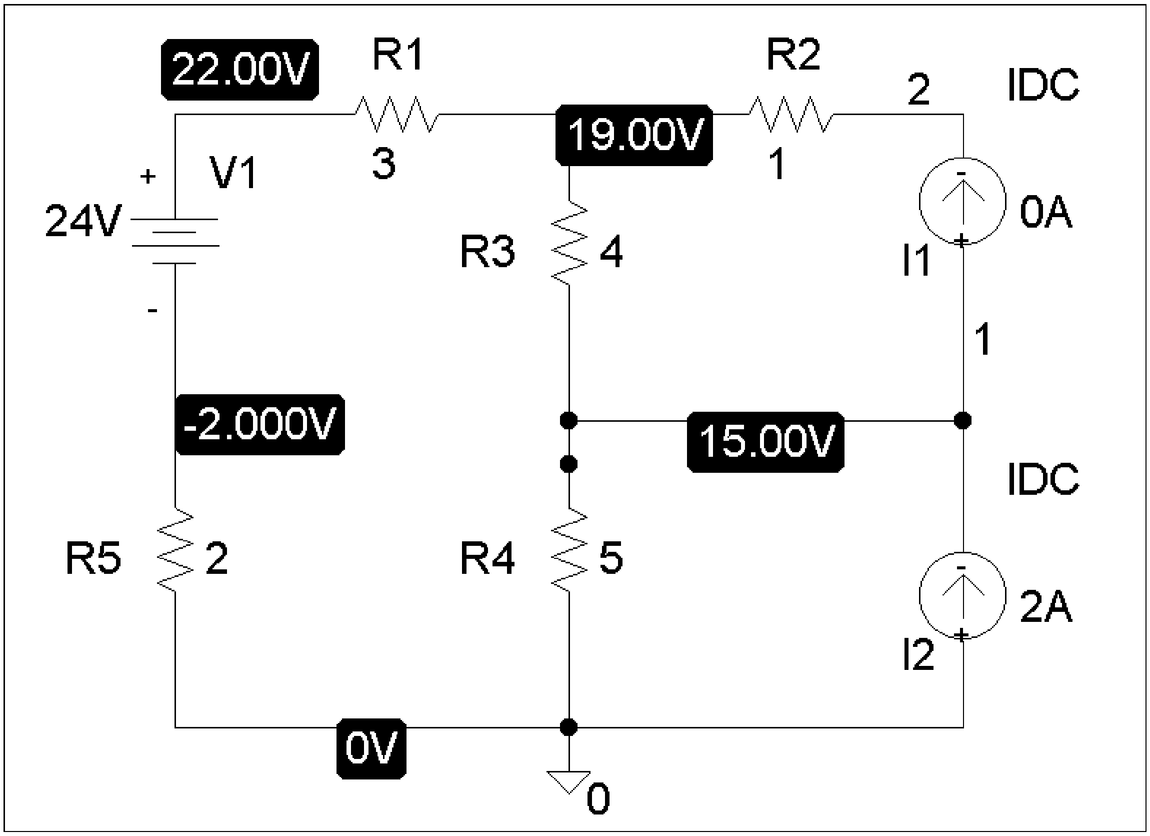

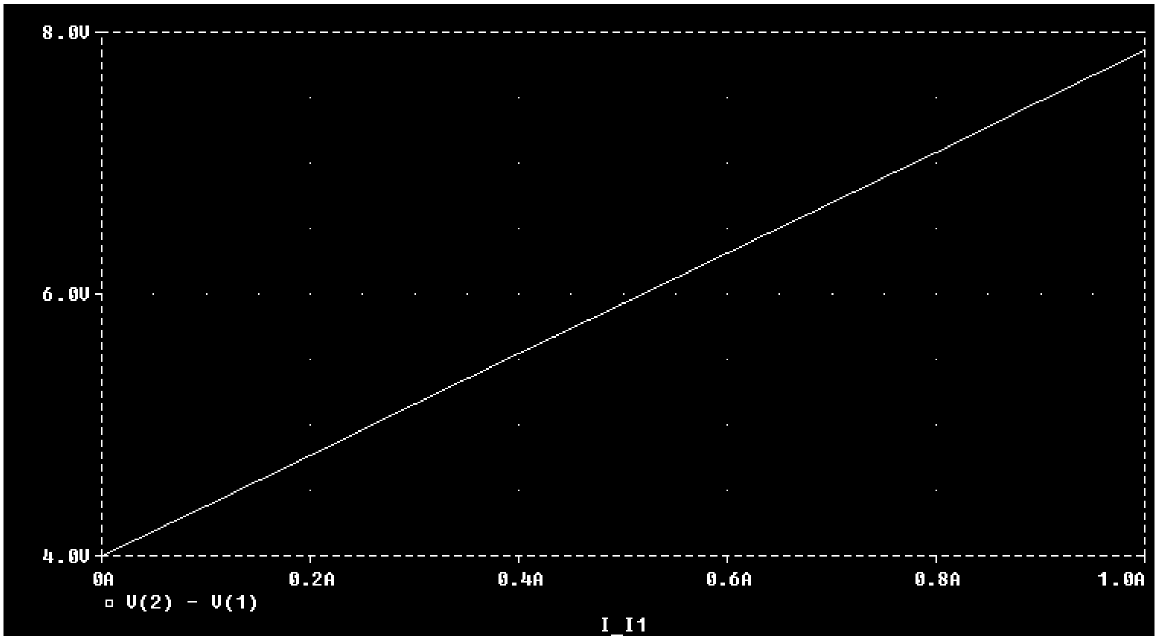

(b) Everything remains the same as in part (a) except that the current source, I1, is connected between terminals b and c as shown below. We perform a dc sweep on I1 and obtain the plot shown below. From the plot, we obtain,

V = **15 V** [zero intercept]

R = (18.2 – 15)/1 = **3.2 ohms**

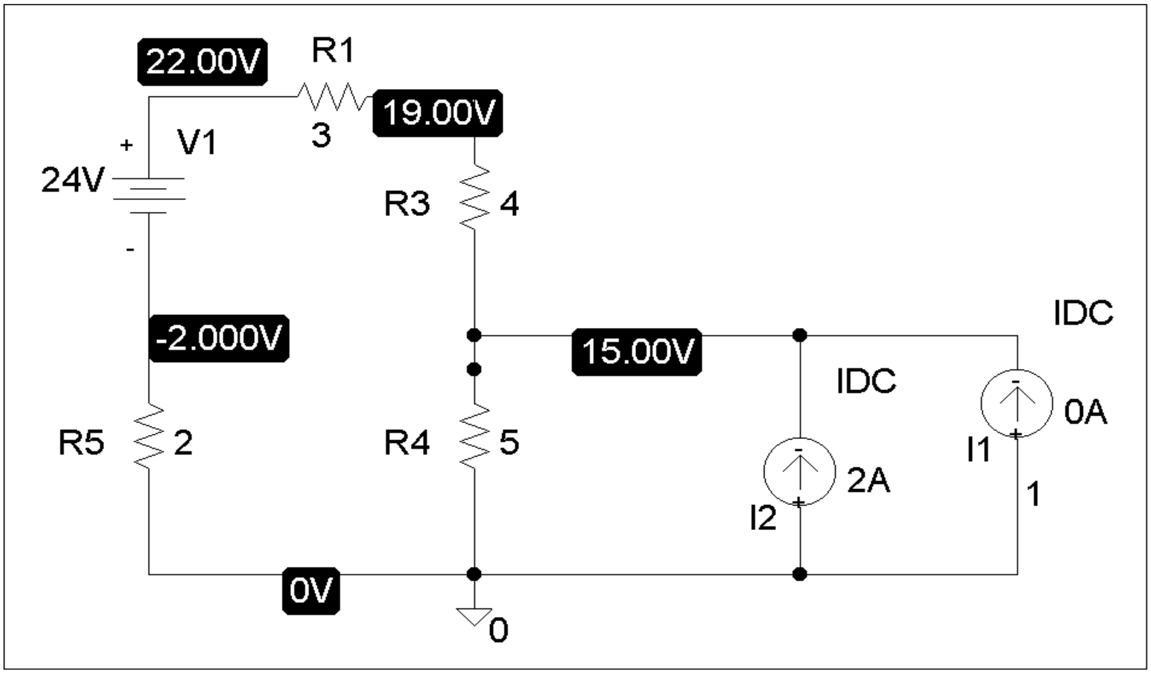

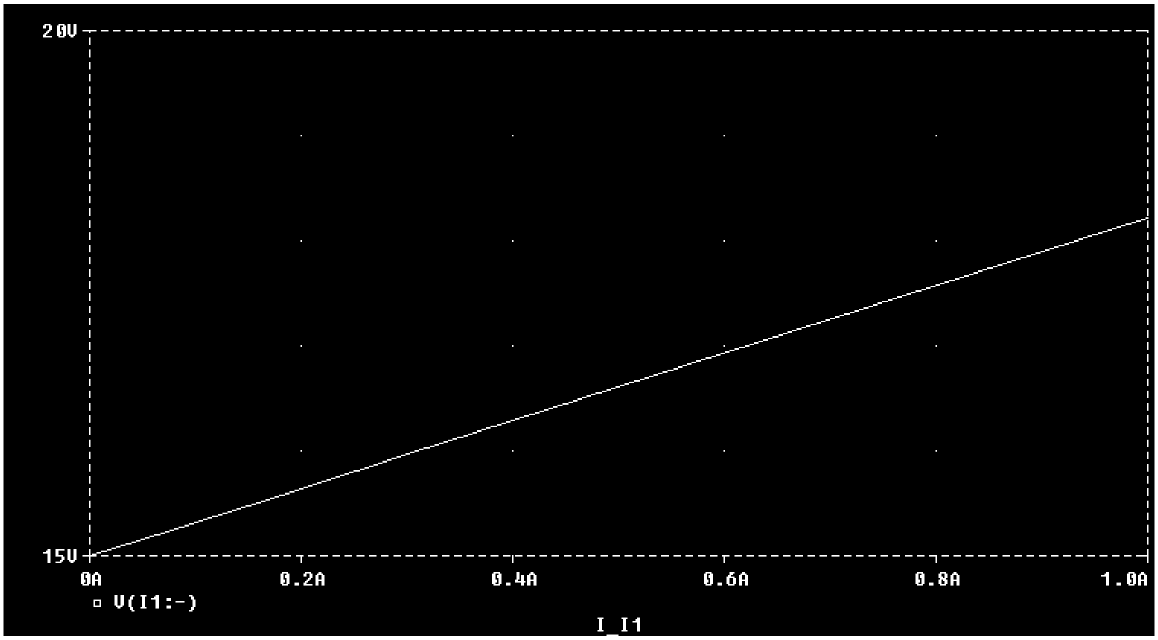

Chapter 4, Solution 78.

The schematic is shown below. We perform a dc sweep on the current source, I1, connected between terminals a and b. The plot is shown. From the plot we obtain,

$$V_{Th} = \underline{\mathbf{-80\ V}} \ \text{[zero intercept]}$$

$$R_{Th} = (1920 - (-80))/1 = \underline{\mathbf{2\ k\ ohms}}$$

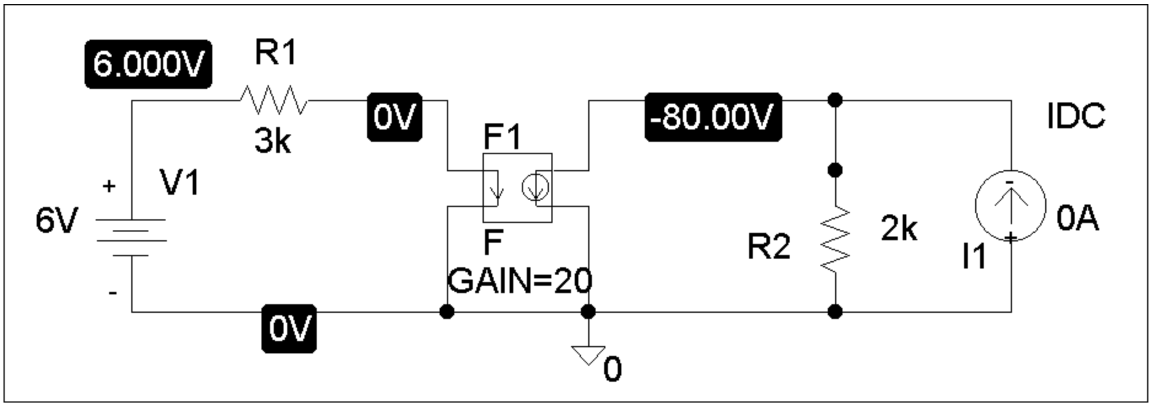

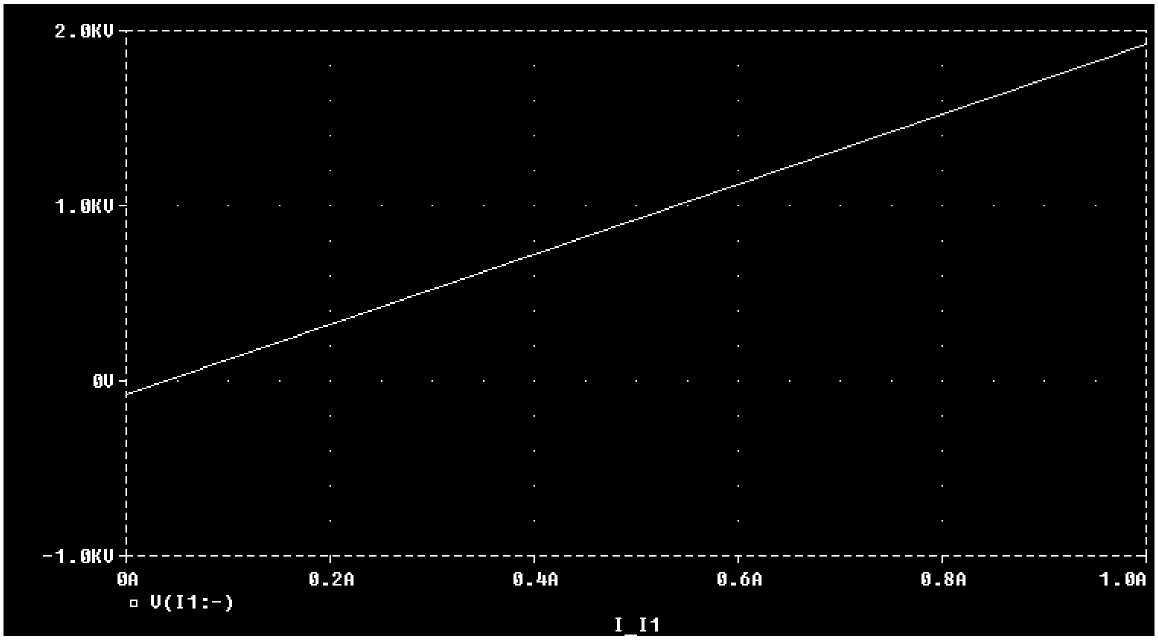

Chapter 4, Solution 79.

After drawing and saving the schematic as shown below, we perform a dc sweep on I1 connected across a and b. The plot is shown. From the plot, we get,

$$V = \underline{\mathbf{167\ V}} \quad \text{[zero intercept]}$$

$$R = (177 - 167)/1 = \underline{\mathbf{10\ ohms}}$$

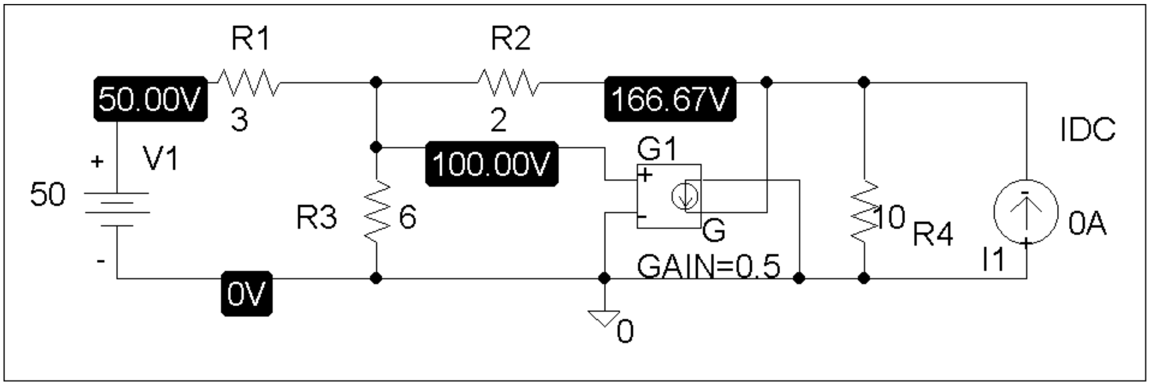

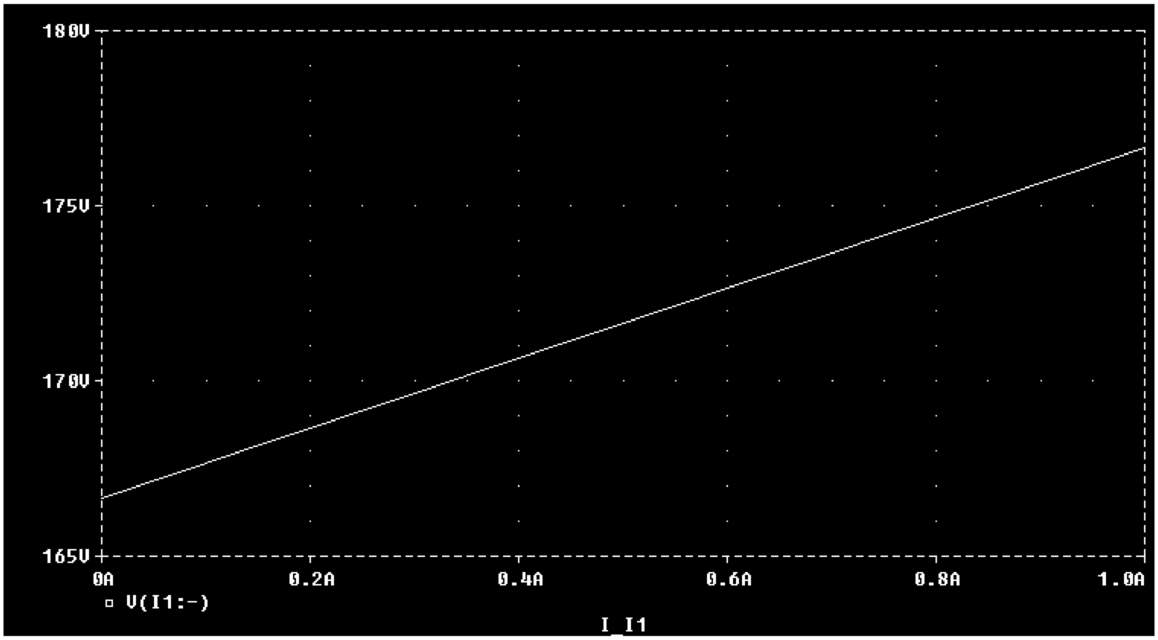

Chapter 4, Solution 80.

The schematic in shown below. We label nodes a and b as 1 and 2 respectively. We perform dc sweep on I1. In the Trace/Add menu, type v(1) – v(2) which will result in the plot below. From the plot,

$$V_{Th} = \underline{\mathbf{40\ V}} \quad \text{[zero intercept]}$$

$$R_{Th} = (40 - 17.5)/1 = \underline{\mathbf{22.5\ ohms}} \quad \text{[slope]}$$

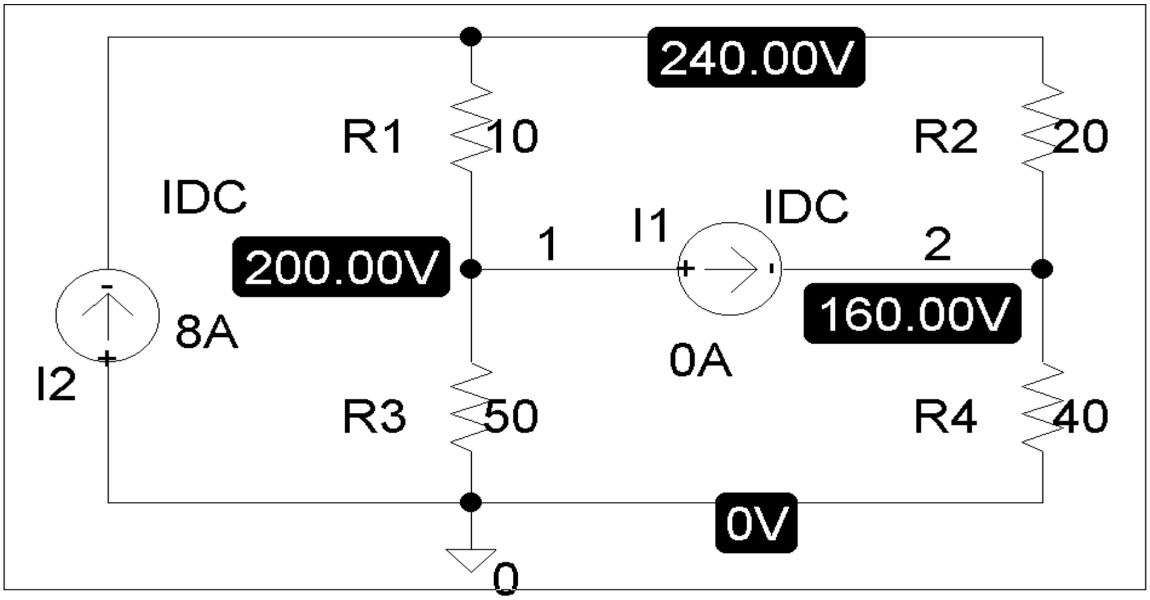

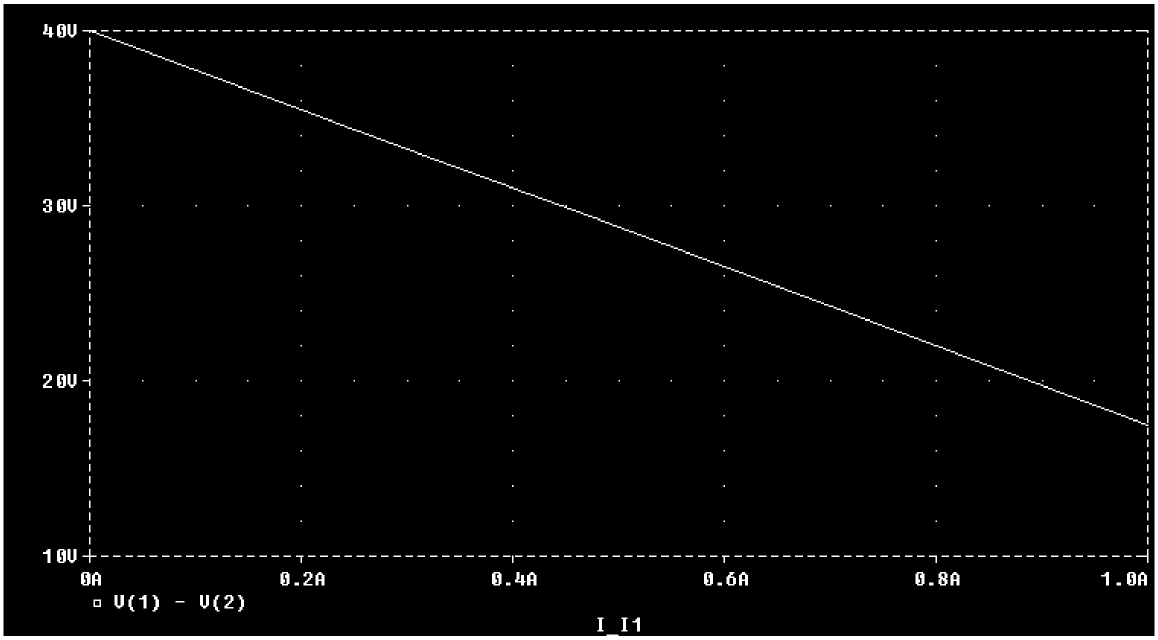

Chapter 4, Solution 81.

The schematic is shown below. We perform a dc sweep on the current source, I2, connected between terminals a and b. The plot of the voltage across I2 is shown below. From the plot,

$$V_{Th} = \underline{\mathbf{10\ V}} \quad \text{[zero intercept]}$$

$$R_{Th} = (10 - 6.4)/1 = \underline{\mathbf{3.4\ ohms}}.$$

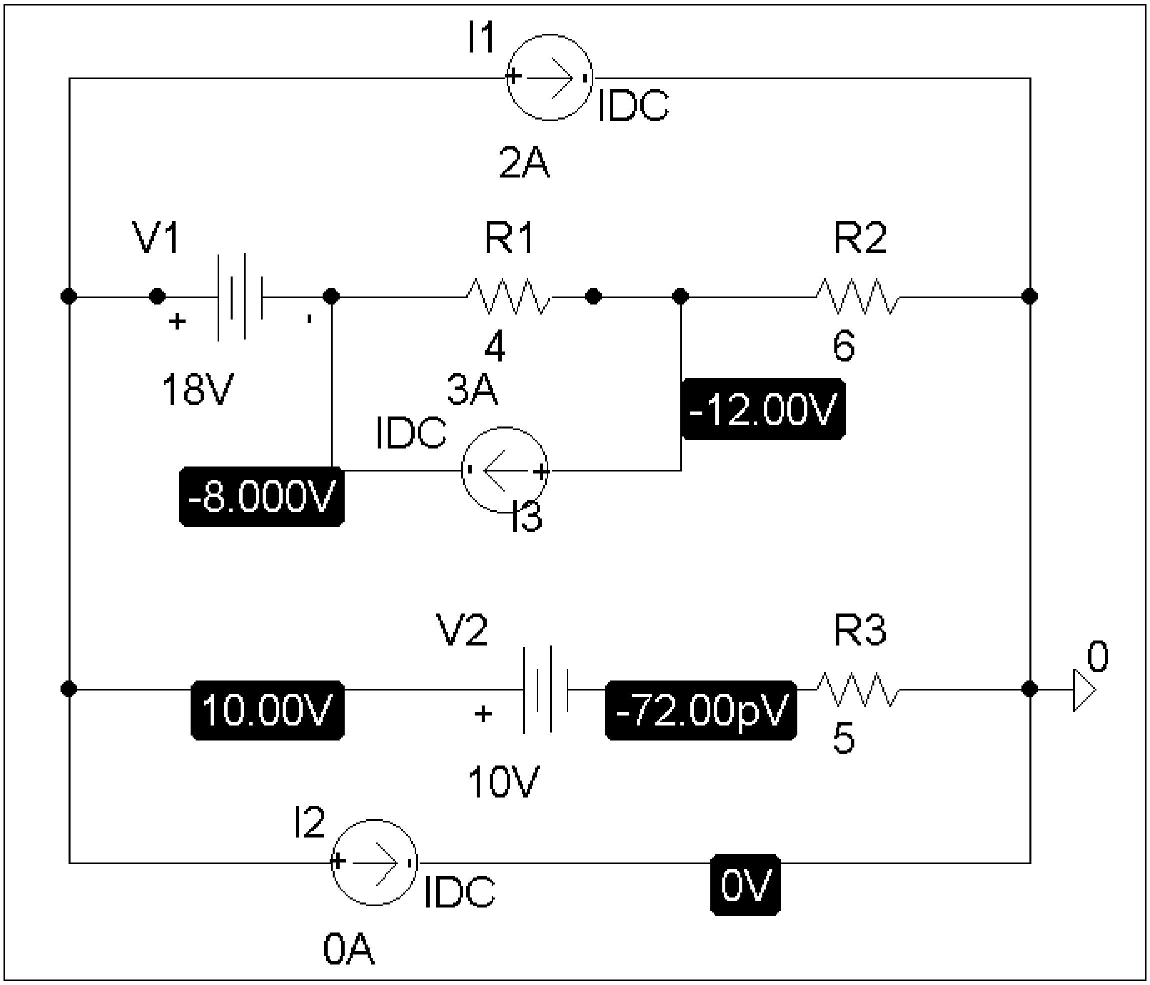

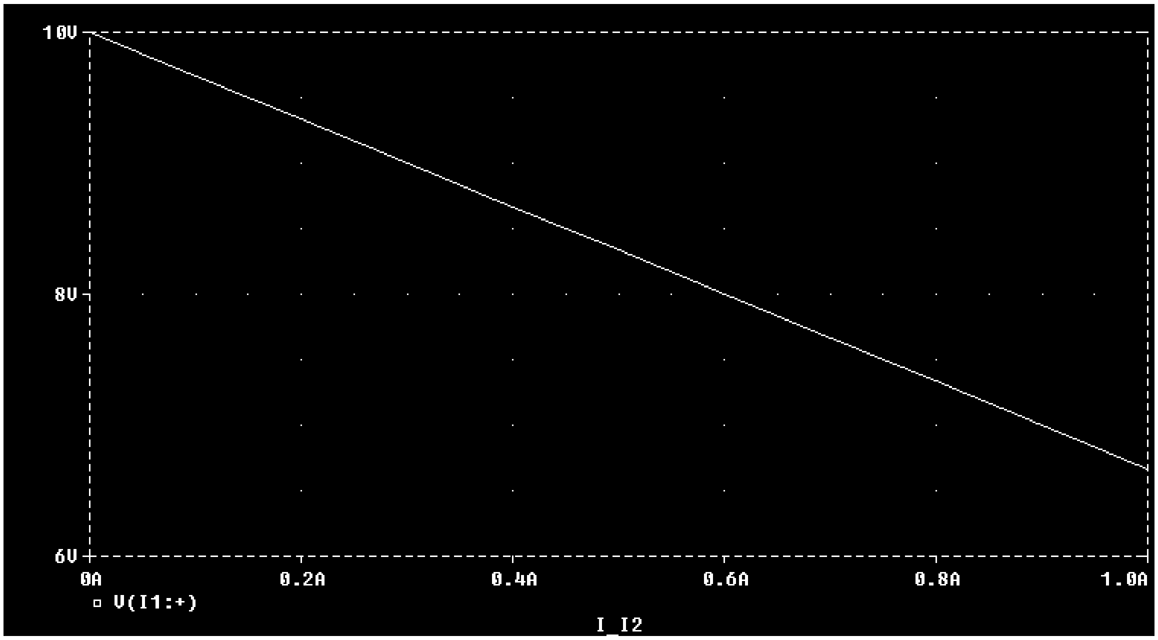

Chapter 4, Solution 82.

V_{Th} = V_{oc} = 12 V, I_{sc} = 20 A

$$R_{Th} = V_{oc}/I_{sc} = 12/20 = 0.6 \text{ ohm.}$$

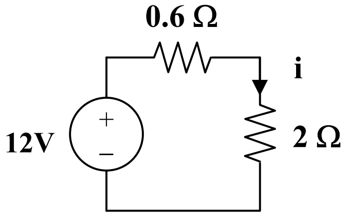

$$i = 12/2.6, \quad p = i^2R = (12/2.6)^2(2) = \underline{\textbf{42.6 watts}}$$

Chapter 4, Solution 83.

V_{Th} = V_{oc} = 12 V, I_{sc} = I_N = 1.5 A

R_{Th} = V_{Th}/I_N = 8 ohms, V_{Th} = **<u>12 V</u>**, R_{Th} = **<u>8 ohms</u>**

Chapter 4, Solution 84

Let the equivalent circuit of the battery terminated by a load be as shown below.

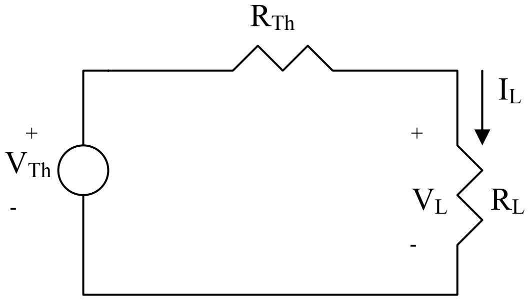

For open circuit,

$$R_L = \infty, \quad \longrightarrow \quad V_{Th} = V_{oc} = V_L = \underline{10.8\text{ V}}$$

When R_L = 4 ohm, V_L=10.5,

$$I_L = \frac{V_L}{R_L} = 10.8/4 = 2.7$$

But

$$V_{Th} = V_L + I_L R_{Th} \quad \longrightarrow \quad R_{Th} = \frac{V_{Th} - V_L}{I_L} = \frac{12 - 10.8}{2.7} = \underline{0.4444\Omega}$$

Chapter 4, Solution 85

(a) Consider the equivalent circuit terminated with R as shown below.

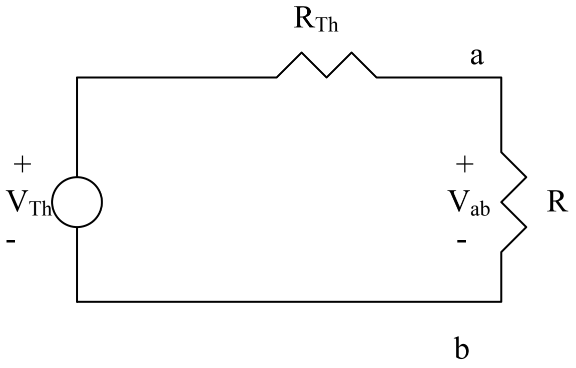

$$V_{ab} = \frac{R}{R + R_{Th}} V_{Th} \quad \longrightarrow \quad 6 = \frac{10}{10 + R_{Th}} V_{Th}$$

or

$$60 + 6R_{Th} = 10V_{Th} \qquad (1)$$

where R_{Th} is in k-ohm.

Similarly,

$$12 = \frac{30}{30 + R_{Th}} V_{Th} \quad \longrightarrow \quad 360 + 12R_{Th} = 30V_{Th} \qquad (2)$$

Solving (1) and (2) leads to

$\underline{V_{Th} = 24\text{ V},\ R_{Th} = 30k\Omega}$

(b) $V_{ab} = \frac{20}{20+30}(24) = \underline{9.6\text{ V}}$

Chapter 4, Solution 86.

We replace the box with the Thevenin equivalent.

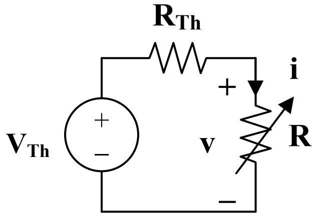

$$V_{Th} = v + iR_{Th}$$

When i = 1.5, v = 3, which implies that V_{Th} = 3 + 1.5R_{Th} (1)

When i = 1, v = 8, which implies that V_{Th} = 8 + 1xR_{Th} (2)

From (1) and (2), R_{Th} = 10 ohms and V_{Th} = 18 V.

(a) When R = 4, i = V_{Th}/(R + R_{Th}) = 18/(4 + 10) = **<u>1.2857 A</u>**

(b) For maximum power, R = R_{TH}

$$P_{max} = (V_{Th})^2/4R_{Th} = 18^2/(4x10) = \underline{\mathbf{8.1\ watts}}$$

Chapter 4, Solution 87.

(a)

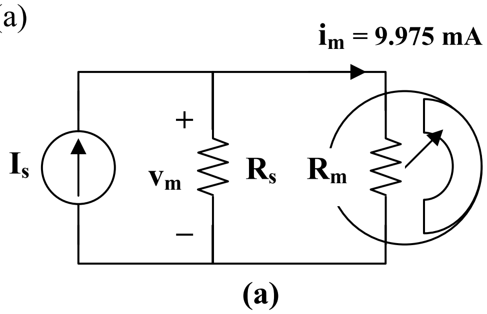

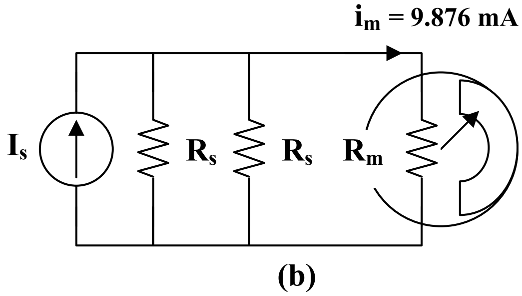

From Fig. (a),

$$v_m = R_m i_m = 9.975 \text{ mA x } 20 = 0.1995 \text{ V}$$

$$I_s = 9.975 \text{ mA} + (0.1995/R_s) \qquad (1)$$

From Fig. (b),

$$v_m = R_m i_m = 20x9.876 = 0.19752 \text{ V}$$

$$I_s = 9.876 \text{ mA} + (0.19752/2k) + (0.19752/R_s)$$

$$= 9.975 \text{ mA} + (0.19752/R_s) \qquad (2)$$

Solving (1) and (2) gives,

R_s = **8 k ohms**, I_s = **10 mA**

(b)

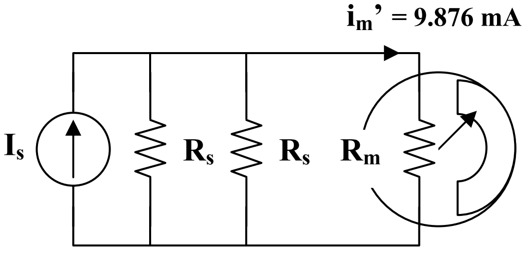

(b)

$$8k||4k = 2.667 \text{ k ohms}$$

i_m' = [2667/(2667 + 20)](10 mA) = **9.926 mA**

Chapter 4, Solution 88

To find R_{Th}, consider the circuit below.

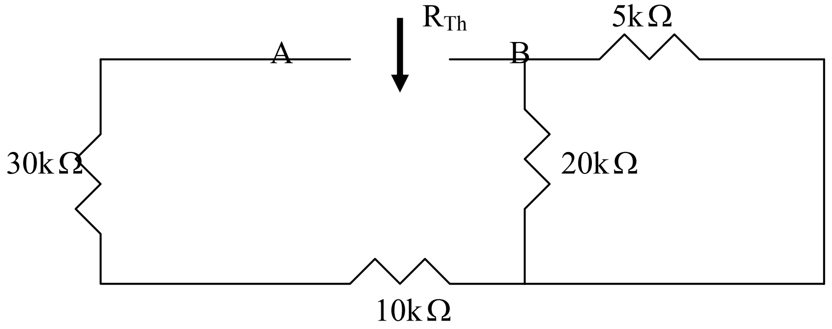

$$R_{Th} = 30 + 10 + 20 // 5 = 44k\Omega$$

To find V_{Th}, consider the circuit below.

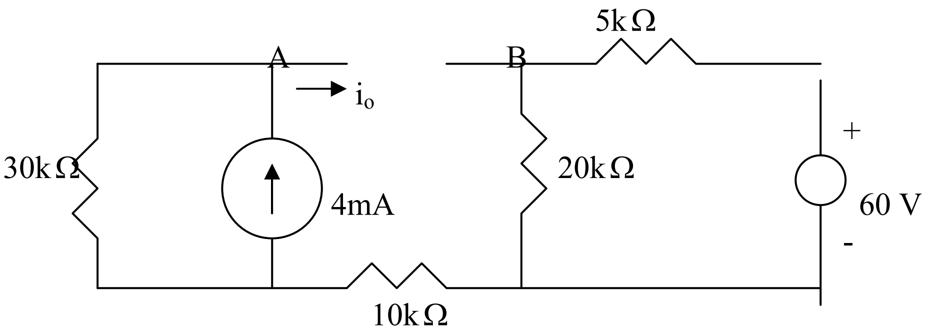

$$V_A = 30x4 = 120, \qquad V_B = \frac{20}{25}(60) = 48, \qquad V_{Th} = V_A - V_B = 72\text{ V}$$

Chapter 4, Solution 89

It is easy to solve this problem using Pspice.

(a) The schematic is shown below. We insert IPROBE to measure the desired ammeter reading. We insert a very small resistance in series IPROBE to avoid problem. After the circuit is saved and simulated, the current is displaced on IPROBE as $99.99\mu\text{A}$.

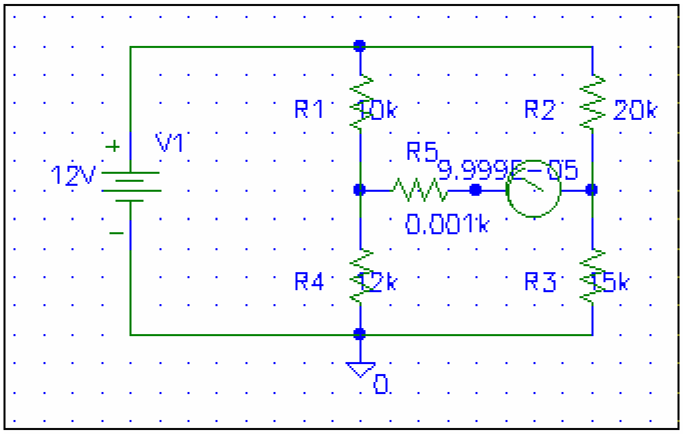

(b) By interchanging the ammeter and the 12-V voltage source, the schematic is shown below. We obtain exactly the same result as in part (a).

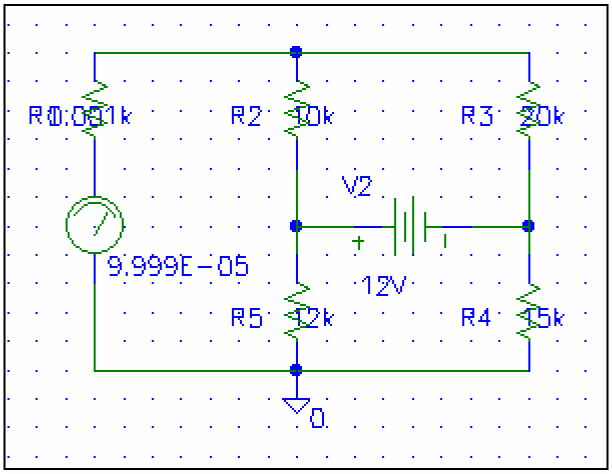

Chapter 4, Solution 90.

$R_x = (R_3/R_1)R_2 = (4/2)R_2 = 42.6, \; R_2 = 21.3$

which is (21.3ohms/100ohms)% = **<u>21.3%</u>**

Chapter 4, Solution 91.

$R_x = (R_3/R_1)R_2$

(a) Since $0 < R_2 < 50$ ohms, to make $0 < R_x < 10$ ohms requires that when $R_2 = 50$ ohms, $R_x = 10$ ohms.

$$10 = (R_3/R_1)50 \;\text{ or }\; R_3 = R_1/5$$

so we select R_1 = **<u>100 ohms</u>** and R_3 = **<u>20 ohms</u>**

(b) For $0 < R_x < 100$ ohms

$$100 = (R_3/R_1)50, \;\text{ or }\; R_3 = 2R_1$$

So we can select R_1 = **<u>100 ohms</u>** and R_3 = **<u>200 ohms</u>**

Chapter 4, Solution 92.

For a balanced bridge, $v_{ab} = 0$. We can use mesh analysis to find v_{ab}. Consider the circuit in Fig. (a), where i_1 and i_2 are assumed to be in mA.

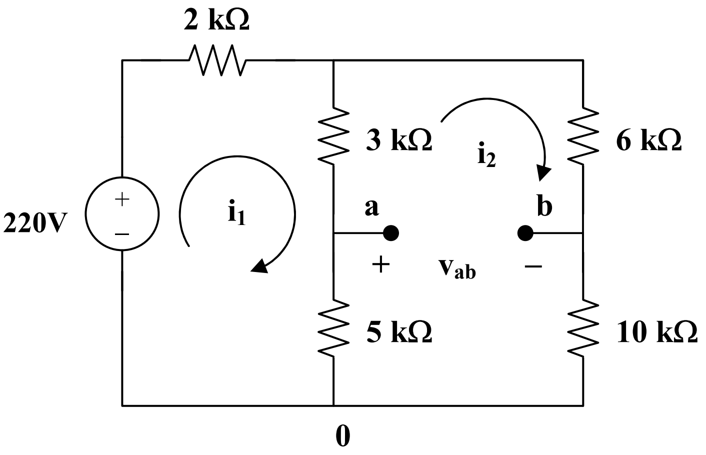

(a)

$$220 = 2i_1 + 8(i_1 - i_2) \text{ or } 220 = 10i_1 - 8i_2 \quad (1)$$

$$0 = 24i_2 - 8i_1 \text{ or } i_2 = (1/3)i_1 \quad (2)$$

From (1) and (2),

$$i_1 = 30 \text{ mA and } i_2 = 10 \text{ mA}$$

Applying KVL to loop 0ab0 gives

$$5(i_2 - i_1) + v_{ab} + 10i_2 = 0 \text{ V}$$

Since $v_{ab} = 0$, the bridge is balanced.

When the 10 k ohm resistor is replaced by the 18 k ohm resistor, the gridge becomes unbalanced. (1) remains the same but (2) becomes

$$0 = 32i_2 - 8i_1, \text{ or } i_2 = (1/4)i_1 \quad (3)$$

Solving (1) and (3),

$$i_1 = 27.5 \text{ mA}, \ i_2 = 6.875 \text{ mA}$$

$$v_{ab} = 5(i_1 - i_2) - 18i_2 = -20.625 \text{ V}$$

$$V_{Th} = v_{ab} = -20.625 \text{ V}$$

To obtain R_{Th}, we convert the delta connection in Fig. (b) to a wye connection shown in Fig. (c).

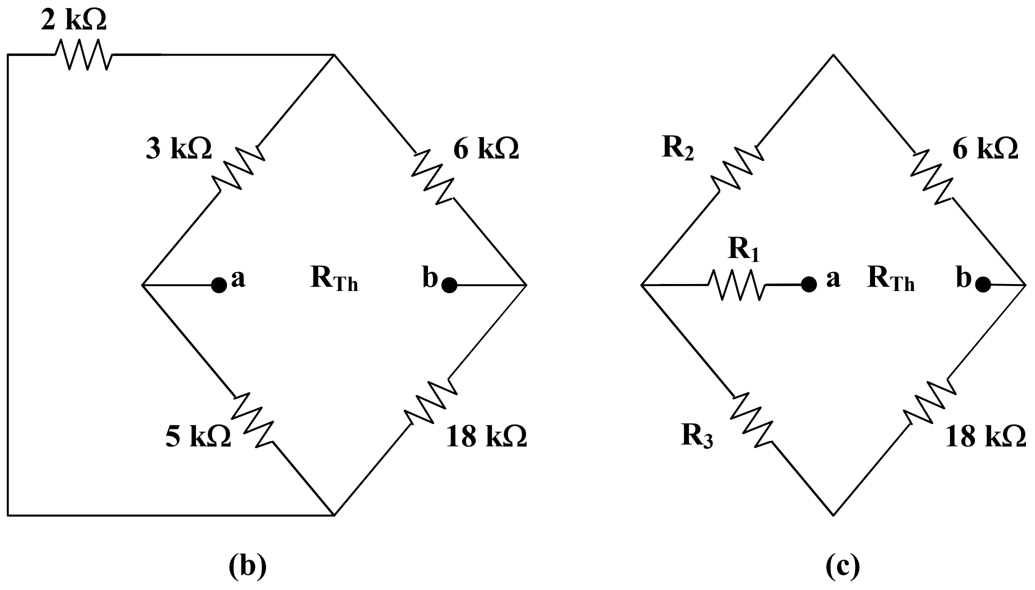

$R_1 = 3x5/(2 + 3 + 5) = 1.5$ k ohms, $R_2 = 2x3/10 = 600$ ohms,

$R_3 = 2x5/10 = 1$ k ohm.

$R_{Th} = R_1 + (R_2 + 6)||(R_3 + 18) = 1.5 + 6.6||9 = 6.398$ k ohms

$R_L = R_{Th} =$ **6.398 k ohms**

$P_{max} = (V_{Th})^2/(4R_{Th}) = (20.625)^2/(4x6.398) =$ **16.622 mWatts**

Chapter 4, Solution 93.

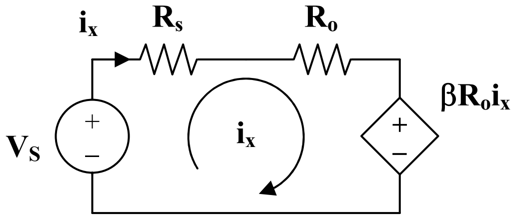

$-V_s + (R_s + R_o)i_x + \beta R_o i_x = 0$

$i_x = \underline{\mathbf{V_s/(R_s + (1 + \beta)R_o)}}$

Chapter 4, Solution 94.

(a) $$V_o/V_g = R_p/(R_g + R_s + R_p) \qquad (1)$$

$$R_{eq} = R_p||(R_g + R_s) = R_g$$

$$R_g = R_p(R_g + R_s)/(R_p + R_g + R_s)$$

$$R_gR_p + R_g^2 + R_gR_s = R_pR_g + R_pR_s$$

$$R_pR_s = R_g(R_g + R_s) \qquad (2)$$

From (1), $$R_p/\alpha = R_g + R_s + R_p$$

$$R_g + R_s = R_p((1/\alpha) - 1) = R_p(1 - \alpha)/\alpha \qquad (1a)$$

Combining (2) and (1a) gives,

$$R_s = [(1 - \alpha)/\alpha]R_{eq} \qquad (3)$$

$$= (1 - 0.125)(100)/0.125 = \underline{\mathbf{700\ ohms}}$$

From (3) and (1a),

$$R_p(1 - \alpha)/\alpha = R_g + [(1 - \alpha)/\alpha]R_g = R_g/\alpha$$

$$R_p = R_g/(1 - \alpha) = 100/(1 - 0.125) = \underline{\mathbf{114.29\ ohms}}$$

(b)

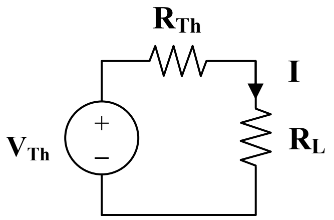

$$V_{Th} = V_s = 0.125V_g = 1.5\ V$$

$$R_{Th} = R_g = 100\ ohms$$

$$I = V_{Th}/(R_{Th} + R_L) = 1.5/150 = \underline{\mathbf{10\ mA}}$$

Chapter 4, Solution 95.

Let 1/sensitivity = 1/(20 k ohms/volt) = 50 μA

For the 0 – 10 V scale,

$$R_m = V_{fs}/I_{fs} = 10/50\ \mu A = 200\text{ k ohms}$$

For the 0 – 50 V scale,

$$R_m = 50(20\text{ k ohms/V}) = 1\text{ M ohm}$$

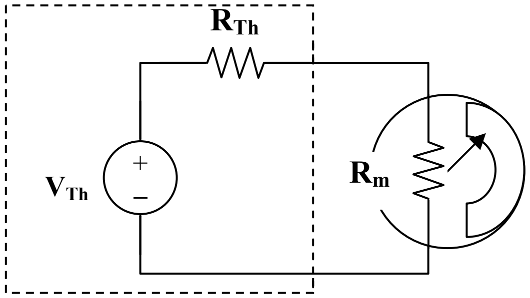

$$V_{Th} = I(R_{Th} + R_m)$$

(a) A 4V reading corresponds to

$$I = (4/10)I_{fs} = 0.4x50\ \mu A = 20\ \mu A$$

$$V_{Th} = 20\ \mu A\ R_{Th} + 20\ \mu A\ 250\text{ k ohms}$$

$$= 4 + 20\ \mu A\ R_{Th} \qquad (1)$$

(b) A 5V reading corresponds to

$$I = (5/50)I_{fs} = 0.1\text{ x }50\ \mu A = 5\ \mu A$$

$$V_{Th} = 5\ \mu A\text{ x }R_{Th} + 5\ \mu A\text{ x }1\text{ M ohm}$$

$$V_{Th} = 5 + 5\ \mu A\ R_{Th} \qquad (2)$$

From (1) and (2)

$$0 = -1 + 15\ \mu A\ R_{Th} \text{ which leads to } R_{Th} = \underline{\mathbf{66.67\text{ k ohms}}}$$

From (1),

$$V_{Th} = 4 + 20x10^{-6}x(1/(15x10^{-6})) = \underline{\mathbf{5.333\text{ V}}}$$

Chapter 4, Solution 96.

(a) The resistance network can be redrawn as shown in Fig. (a),

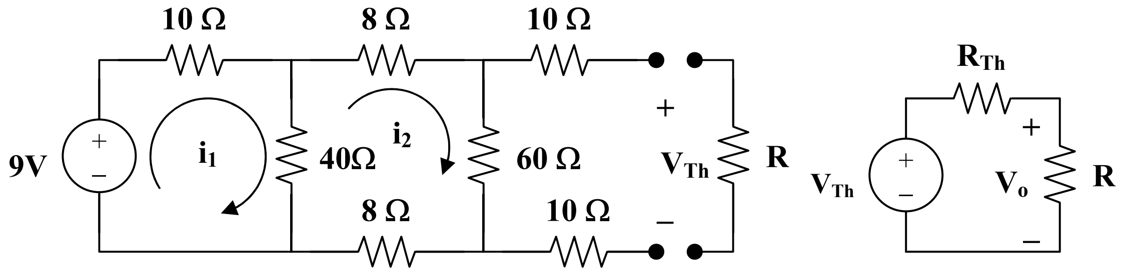

(a) **(b)**

$$R_{Th} = 10 + 10 + 60||(8 + 8 + 10||40) = 20 + 60||24 = 37.14 \text{ ohms}$$

Using mesh analysis,

$$-9 + 50i_1 - 40i_2 = 0 \qquad (1)$$
$$116i_2 - 40i_1 = 0 \text{ or } i_1 = 2.9i_2 \qquad (2)$$

From (1) and (2), $i_2 = 9/105$

$$V_{Th} = 60i_2 = 5.143 \text{ V}$$

From Fig. (b),

$$V_o = [R/(R + R_{Th})]V_{Th} = 1.8$$

$R/(R + 37.14) = 1.8/5.143$ which leads to R = **<u>20 ohms</u>**

(b) $R = R_{Th} =$ **<u>37.14 ohms</u>**

$I_{max} = V_{Th}/(2R_{Th}) = 5.143/(2x37.14) =$ **<u>69.23 mA</u>**

Chapter 4, Solution 97.

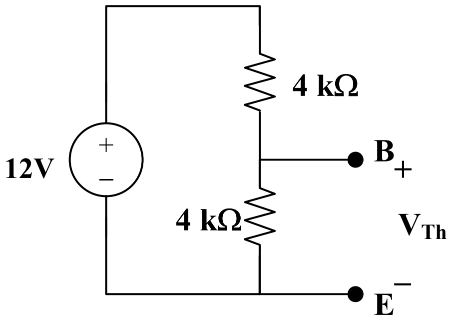

$R_{Th} = R_1||R_2 = 6||4 = $ **2.4 k ohms**

$V_{Th} = [R_2/(R_1 + R_2)]v_s = [4/(6 + 4)](12) = $ **4.8 V**

Chapter 4, Solution 98.

The 20-ohm, 60-ohm, and 14-ohm resistors form a delta connection which needs to be connected to the wye connection as shown in Fig. (b),

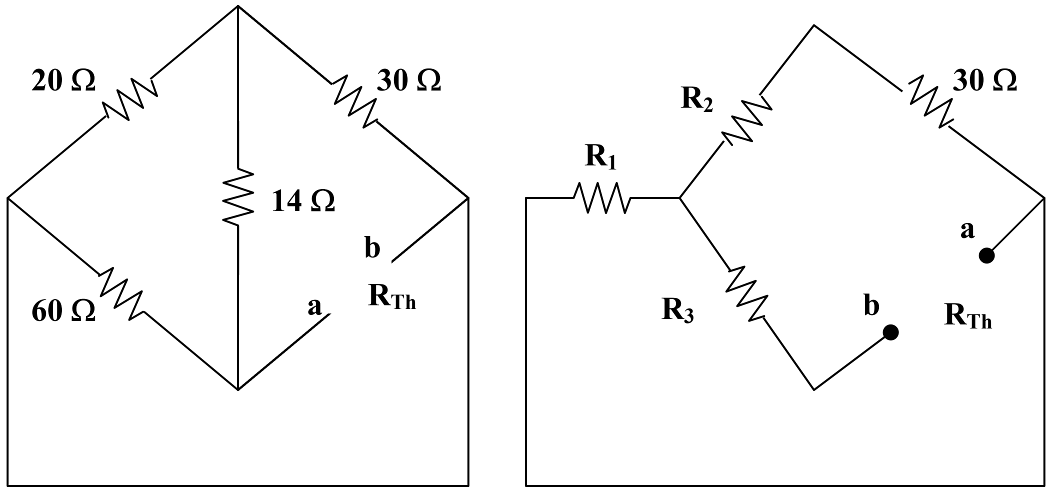

(a) **(b)**

$$R_1 = 20x60/(20 + 60 + 14) = 1200/94 = 12.97 \text{ ohms}$$

$$R_2 = 20x14/94 = 2.98 \text{ ohms}$$

$$R_3 = 60x14/94 = 8.94 \text{ ohms}$$

$$R_{Th} = R_3 + R_1||(R_2 + 30) = 8.94 + 12.77||32.98 = 18.15 \text{ ohms}$$

To find V_{Th}, consider the circuit in Fig. (c).

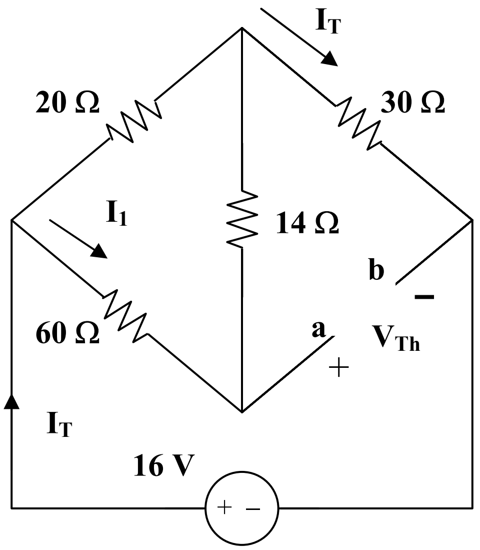

(c)

$$I_T = 16/(30 + 15.74) = 350 \text{ mA}$$

$$I_1 = [20/(20 + 60 + 14)]I_T = 94.5 \text{ mA}$$

$$V_{Th} = 14I_1 + 30I_T = 11.824 \text{ V}$$

$$I_{40} = V_{Th}/(R_{Th} + 40) = 11.824/(18.15 + 40) = 203.3 \text{ mA}$$

$$P_{40} = I_{40}^2R = \underline{\mathbf{1.654 \text{ watts}}}$$

Chapter 5, Solution 1.

(a) R_{in} = **<u>1.5 MΩ</u>**

(b) R_{out} = **<u>60 Ω</u>**

(c) $A = 8x10^4$

Therefore $A_{dB} = 20 \log 8x10^4 =$ **<u>98.0 dB</u>**

Chapter 5, Solution 2.

$$v_0 = Av_d = A(v_2 - v_1)$$
$$= 10^5 (20\text{-}10) \times 10^{-6} = \underline{\mathbf{0.1V}}$$

Chapter 5, Solution 3.

$$v_0 = Av_d = A(v_2 - v_1)$$
$$= 2 \times 10^5 (30 + 20) \times 10^{-6} = \underline{\mathbf{10V}}$$

Chapter 5, Solution 4.

$$v_0 = Av_d = A(v_2 - v_1)$$
$$v_2 - v_1 = \frac{v_0}{A} = \frac{-4}{2x10^5} = -20\mu V$$

If v_1 and v_2 are in mV, then

$v_2 - v_1 = -20 \text{ mV} = 0.02$

$1 - v_1 = -0.02$

$v_1 = \underline{\mathbf{1.02\ mV}}$

Chapter 5, Solution 5.

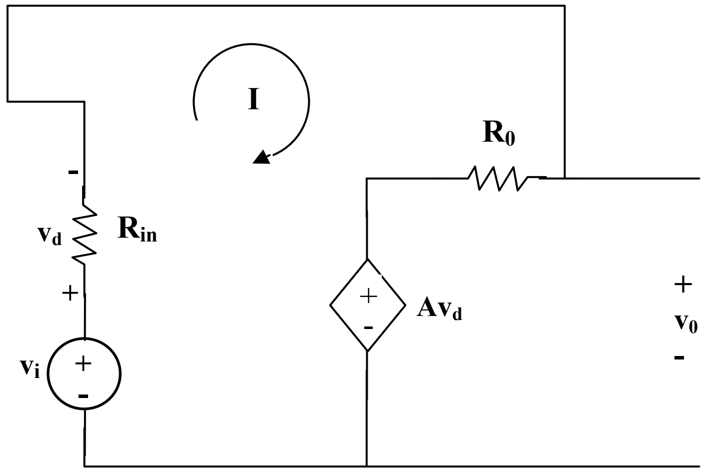

$-v_i + Av_d + (R_i - R_0)\, I = 0 \qquad (1)$

But $\quad v_d = R_iI,$

$-v_i + (R_i + R_0 + R_iA)\, I = 0$

$$v_d = \frac{v_iR_i}{R_0 + (1+A)R_i} \qquad (2)$$

$-Av_d - R_0I + v_0 = 0$

$$v_0 = Av_d + R_0I = (R_0 + R_iA)I \;=\; \frac{(R_0 + R_iA)v_i}{R_0 + (1+A)R_i}$$

$$\frac{v_0}{v_i} = \frac{R_0 + R_iA}{R_0 + (1+A)R_i} = \frac{100 + 10^4 x10^5}{100 + (1+10^5)}\cdot 10^4$$

$$\cong \frac{10^9}{\left(1+10^5\right)}\cdot 10^4 = \frac{100{,}000}{100{,}001} = \underline{\mathbf{0.9999990}}$$

Chapter 5, Solution 6.

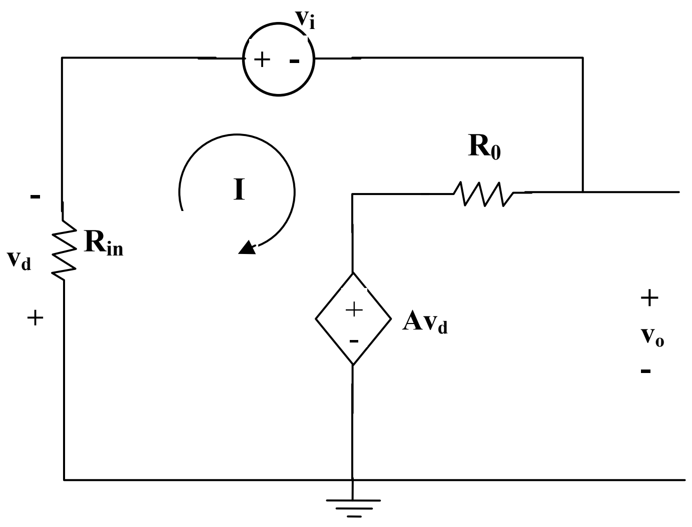

$(R_0 + R_i)R + v_i + Av_d = 0$

But $v_d = R_iI$,

$v_i + (R_0 + R_i + R_iA)I = 0$

$$I = \frac{-v_i}{R_0 + (1+A)R_i} \qquad (1)$$

$-Av_d - R_0I + v_o = 0$

$v_o = Av_d + R_0I = (R_0 + R_iA)I$

Substituting for I in (1),

$$v_0 = -\left(\frac{R_0 + R_iA}{R_0 + (1+A)R_i}\right)v_i$$

$$= -\frac{\left(50 + 2x10^6 x2x10^5\right)\cdot 10^{-3}}{50 + \left(1 + 2x10^5\right)x2x10^6}$$

$$\cong \frac{-200{,}000x2x10^6}{200{,}001x2x10^6}\text{mV}$$

v_0 = **<u>-0.999995 mV</u>**

Chapter 5, Solution 7.

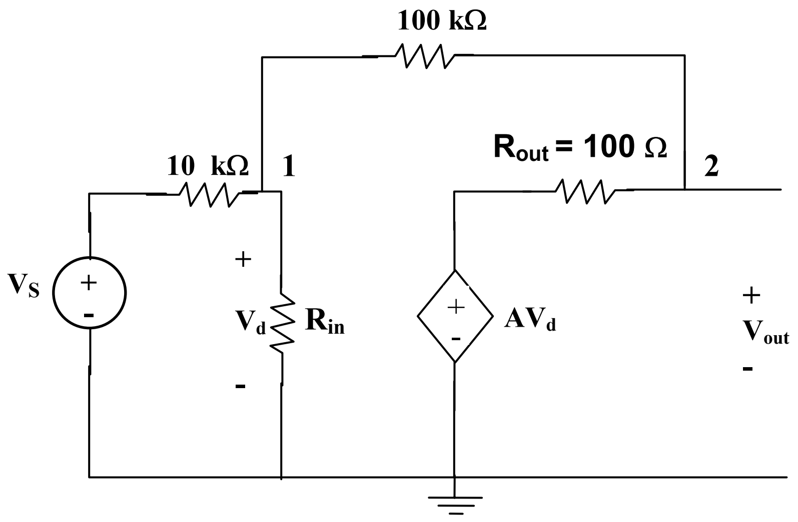

At node 1, $(V_S - V_1)/10\text{ k} = [V_1/100\text{ k}] + [(V_1 - V_0)/100\text{ k}]$

$10\,V_S - 10\,V_1 = V_1 + V_1 - V_0$

which leads to $V_1 = (10V_S + V_0)/12$

At node 2, $(V_1 - V_0)/100\text{ k} = (V_0 - AV_d)/100$

But $V_d = V_1$ and $A = 100{,}000$,

$V_1 - V_0 = 1000\,(V_0 - 100{,}000V_1)$

$0 = 1001V_0 - 100{,}000{,}001[(10V_S + V_0)/12]$

$0 = -83{,}333{,}334.17\,V_S - 8{,}332{,}333.42\,V_0$

which gives us $(V_0/ V_S) = -10$ (for all practical purposes)

If $V_S = 1$ mV, then $V_0 =$ **-10 mV**

Since $V_0 = A\,V_d = 100{,}000\,V_d$, then $V_d = (V_0/10^5)\,V =$ **-100 nV**

Chapter 5, Solution 8.

(a) If v_a and v_b are the voltages at the inverting and noninverting terminals of the op amp.

$v_a = v_b = 0$

$$1\text{mA} = \frac{0 - v_0}{2k} \longrightarrow v_0 = \mathbf{-2V}$$

(b)

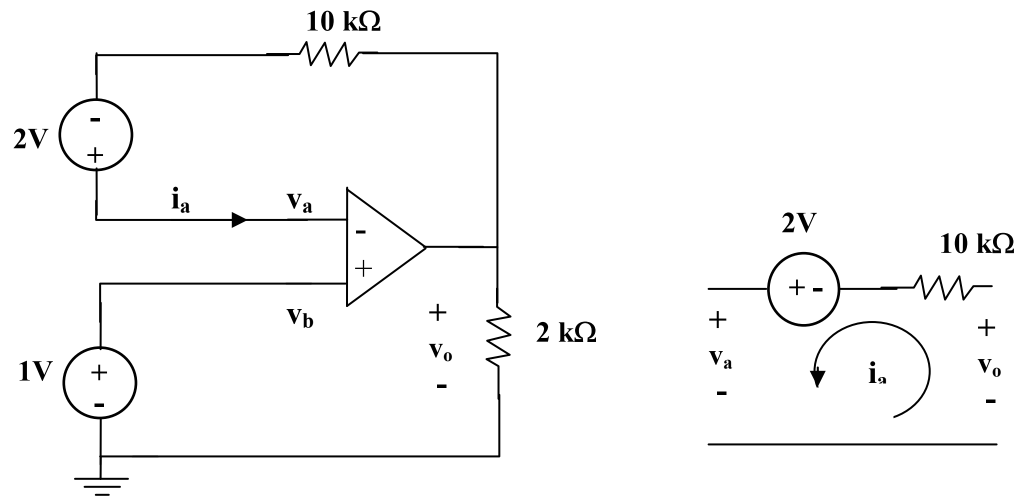

(a) (b)

Since $v_a = v_b = 1V$ and $i_a = 0$, no current flows through the 10 kΩ resistor. From Fig. (b),

$$-v_a + 2 + v_0 = 0 \longrightarrow v_a = v_a - 2 = 1 - 2 = \underline{\mathbf{-1V}}$$

Chapter 5, Solution 9.

(a) Let v_a and v_b be respectively the voltages at the inverting and noninverting terminals of the op amp

$$v_a = v_b = 4V$$

At the inverting terminal,

$$1mA = \frac{4 - v_0}{2k} \longrightarrow v_0 = \underline{\mathbf{2V}}$$

(b)

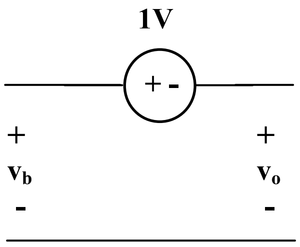

Since $v_a = v_b = 3V$,

$$-v_b + 1 + v_o = 0 \longrightarrow v_o = v_b - 1 = \underline{\mathbf{2V}}$$

Chapter 5, Solution 10.

Since no current enters the op amp, the voltage at the input of the op amp is v_s. Hence

$$v_s = v_o\left(\frac{10}{10+10}\right) = \frac{v_o}{2} \longrightarrow \frac{v_o}{v_s} = \underline{\mathbf{2}}$$

Chapter 5, Solution 11.

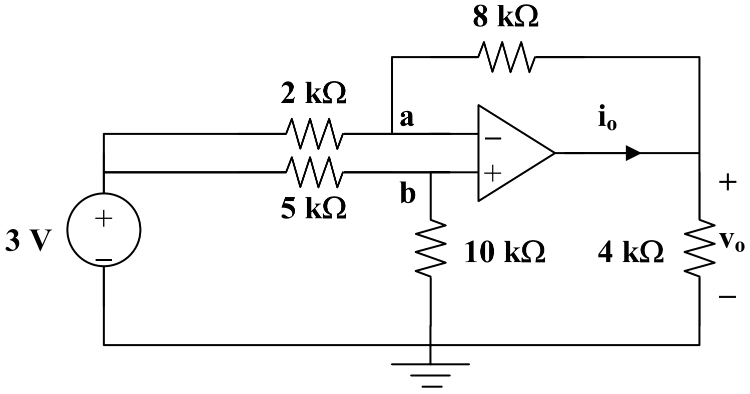

$$v_b = \frac{10}{10+5}(3) = 2\text{V}$$

At node a,

$$\frac{3 - v_a}{2} = \frac{v_a - v_o}{8} \longrightarrow 12 = 5v_a - v_o$$

But $v_a = v_b = 2\text{V}$,

$$12 = 10 - v_o \qquad \longrightarrow \qquad v_o = \underline{\mathbf{-2V}}$$

$$-i_o = \frac{v_a - v_o}{8} + \frac{0 - v_o}{4} = \frac{2+2}{8} + \frac{2}{4} = 1\text{mA}$$

$$i_o = \underline{\mathbf{-1mA}}$$

Chapter 5, Solution 12.

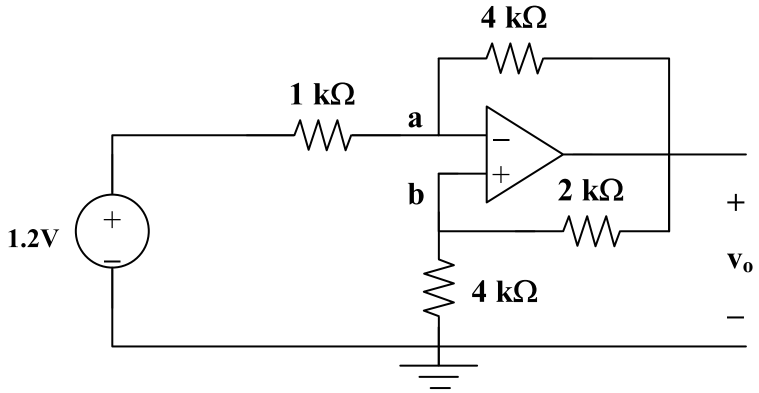

At node b, $v_b = \frac{4}{4+2}v_o = \frac{2}{3}v_o = \frac{2}{3}v_o$

At node a, $\frac{1.2 - v_a}{1} = \frac{v_a - v_o}{4}$, but $v_a = v_b = \frac{2}{3}v_o$

$$4.8 - 4 \text{ x } \frac{2}{3}v_o = \frac{2}{3}v_o - v_o \longrightarrow v_o = \frac{3\text{x}4.8}{7} = 2.0570\text{V}$$

$$v_a = v_b = \frac{2}{3}v_o = \frac{9.6}{7}$$

$$i_s = \frac{1.2 - v_a}{1} = \frac{-1.2}{7}$$

$$p = v_s i_s = 1.2\left(\frac{-1.2}{7}\right) = \underline{\mathbf{-205.7\ mW}}$$

Chapter 5, Solution 13.

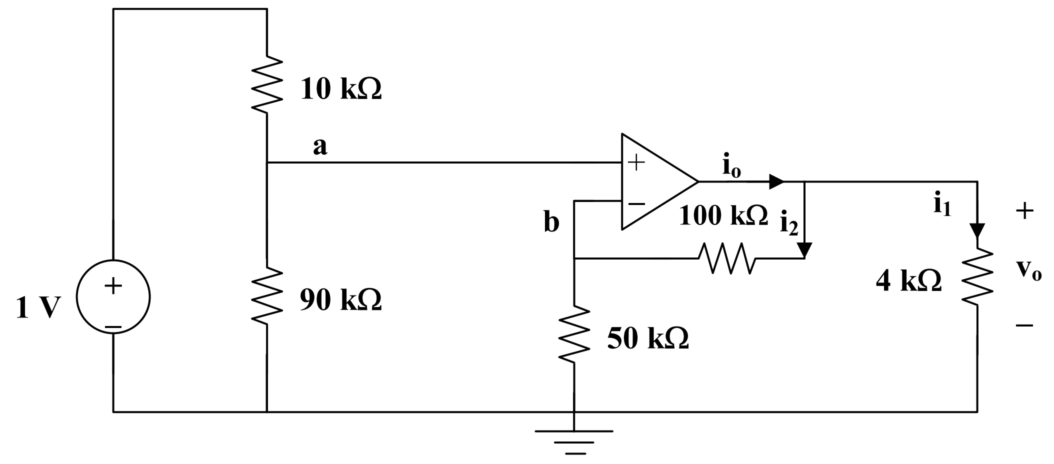

By voltage division,

$$v_a = \frac{90}{100}(1) = 0.9\text{V}$$

$$v_b = \frac{50}{150}v_o = \frac{v_o}{3}$$

But $v_a = v_b \longrightarrow \frac{v_0}{3} = 0.9 \longrightarrow v_o = \underline{\mathbf{2.7V}}$

$$i_o = i_1 + i_2 = \frac{v_o}{10k} + \frac{v_o}{150k} = 0.27\text{mA} + 0.018\text{mA} = \underline{\mathbf{288\ \mu A}}$$

Chapter 5, Solution 14.

Transform the current source as shown below. At node 1,

$$\frac{10 - v_1}{5} = \frac{v_1 - v_2}{20} + \frac{v_1 - v_o}{10}$$

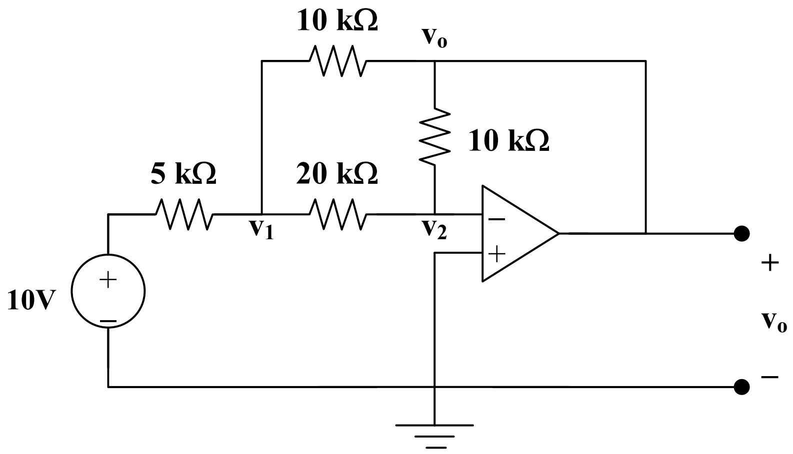

But $v_2 = 0$. Hence $40 - 4v_1 = v_1 + 2v_1 - 2v_o \longrightarrow 40 = 7v_1 - 2v_o$ (1)

At node 2, $\frac{v_1 - v_2}{20} = \frac{v_2 - v_o}{10}$, $v_2 = 0$ or $v_1 = -2v_o$ (2)

From (1) and (2), $40 = -14v_o - 2v_o \longrightarrow v_o =$ **$\underline{-2.5\text{V}}$**

Chapter 5, Solution 15

(a) Let v_1 be the voltage at the node where the three resistors meet. Applying KCL at this node gives

$$i_s = \frac{v_1}{R_2} + \frac{v_1 - v_o}{R_3} = v_1\left(\frac{1}{R_2} + \frac{1}{R_3}\right) - \frac{v_o}{R_3} \qquad (1)$$

At the inverting terminal,

$$i_s = \frac{0 - v_1}{R_1} \longrightarrow v_1 = -i_s R_1 \qquad (2)$$

Combining (1) and (2) leads to

$$i_s\left(1 + \frac{R_1}{R_2} + \frac{R_1}{R_3}\right) = -\frac{v_o}{R_3} \longrightarrow \underline{\frac{v_o}{i_s} = -\left(R_1 + R_3 + \frac{R_1 R_3}{R_2}\right)}$$

(b) For this case,

$$\frac{v_o}{i_s} = -\left(20 + 40 + \frac{20x40}{25}\right)\text{k}\Omega = \underline{-92\text{ k}\Omega}$$

Chapter 5, Solution 16

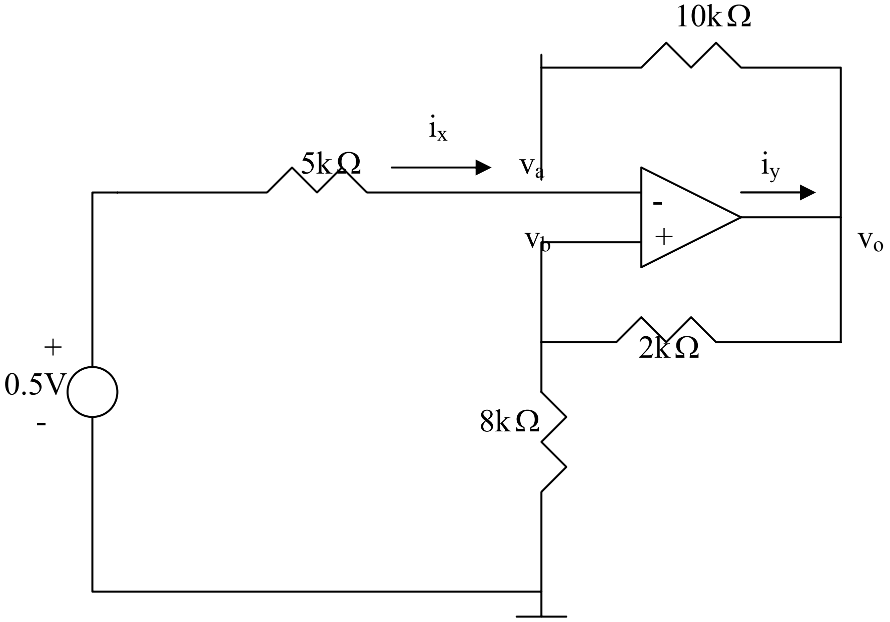

Let currents be in mA and resistances be in kΩ. At node a,

$$\frac{0.5 - v_a}{5} = \frac{v_a - v_o}{10} \quad \longrightarrow \quad 1 = 3v_a - v_o \qquad (1)$$

But

$$v_a = v_b = \frac{8}{8+2} v_o \quad \longrightarrow v_o = \frac{10}{8} v_a \qquad (2)$$

Substituting (2) into (1) gives

$$1 = 3v_a - \frac{10}{8} v_a \quad \longrightarrow \quad v_a = \frac{8}{14}$$

Thus,

$$i_x = \frac{0.5 - v_a}{5} = -1/70 \text{ mA} = \underline{-14.28\ \mu\text{A}}$$

$$i_y = \frac{v_o - v_b}{2} + \frac{v_o - v_a}{10} = 0.6(v_o - v_a) = 0.6(\frac{10}{8} v_a - v_a) = \frac{0.6}{4} x \frac{8}{14} \text{ mA} = \underline{85.71\ \mu\text{A}}$$

Chapter 5, Solution 17.

(a) $$G = \frac{v_o}{v_i} = -\frac{R_2}{R_1} = -\frac{12}{5} = \underline{\mathbf{-2.4}}$$

(b) $$\frac{v_o}{v_i} = -\frac{80}{5} = \underline{\mathbf{-16}}$$

(c) $$\frac{v_o}{v_i} = -\frac{2000}{5} = \underline{\mathbf{-400}}$$

Chapter 5, Solution 18.

Converting the voltage source to current source and back to a voltage source, we have the circuit shown below:

$$10 \| 20 = \frac{20}{3} \text{ k}\Omega$$

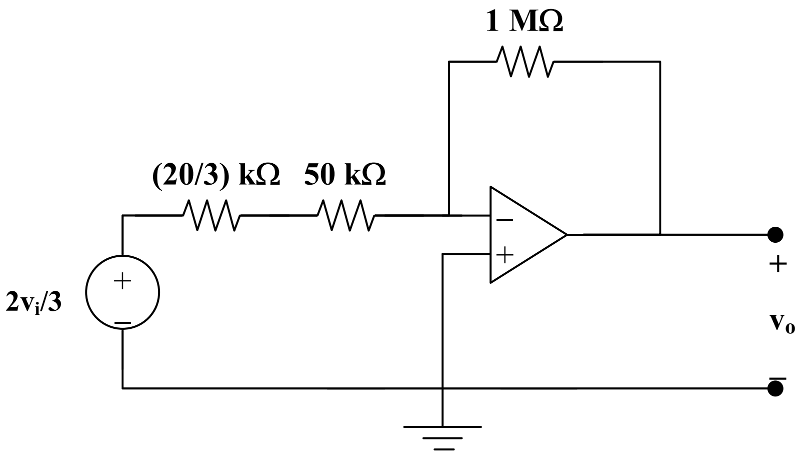

$$v_o = -\frac{1000}{50 + \frac{20}{3}} \cdot \frac{2v_i}{3} \longrightarrow \frac{v_o}{v_1} = -\frac{200}{17} = \underline{\mathbf{-11.764}}$$

Chapter 5, Solution 19.

We convert the current source and back to a voltage source.

$$2 \| 4 = \frac{4}{3}$$

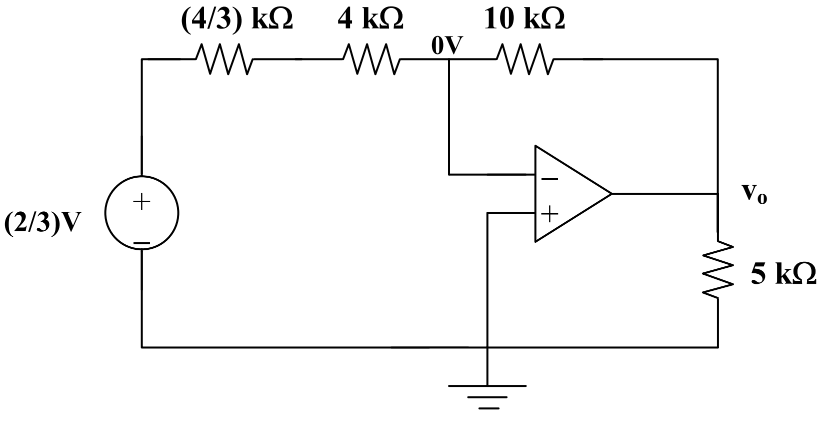

$$v_o = -\frac{10k}{\left(4x\frac{4}{3}\right)k}\left(\frac{2}{3}\right) = -1.25V$$

$$i_o = \frac{v_o}{5k} + \frac{v_o - 0}{10k} = \underline{\mathbf{-0.375mA}}$$

Chapter 5, Solution 20.

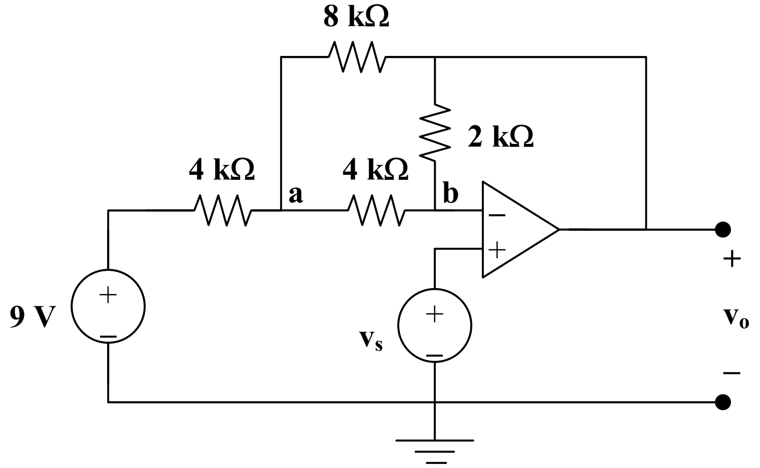

At node a,

$$\frac{9 - v_a}{4} = \frac{v_a - v_o}{8} + \frac{v_a - v_b}{4} \longrightarrow 18 = 5v_a - v_o - 2v_b \qquad (1)$$

At node b,

$$\frac{v_a - v_b}{4} = \frac{v_b - v_o}{2} \longrightarrow v_a = 3v_b - 2v_o \qquad (2)$$

But $v_b = v_s = 0$; (2) becomes $v_a = -2v_o$ and (1) becomes

$$-18 = -10v_o - v_o \longrightarrow v_o = -18/(11) = \underline{\mathbf{-1.6364V}}$$

Chapter 5, Solution 21.

Eqs. (1) and (2) remain the same. When $v_b = v_s = 3V$, eq. (2) becomes

$$v_a = 3 \text{ x } 3 - 2v_0 = 9 - 2v_o$$

Substituting this into (1), $18 = 5\,(9\text{-}2v_o) - v_o - 6$ leads to

$$v_o = 21/(11) = \underline{\mathbf{1.909V}}$$

Chapter 5, Solution 22.

$A_v = -R_f/R_i = -15.$

If $R_i = 10k\Omega$, then R_f = **<u>150 kΩ.</u>**

Chapter 5, Solution 23

At the inverting terminal, v=0 so that KCL gives

$$\frac{v_s - 0}{R_1} = \frac{0}{R_2} + \frac{0 - v_o}{R_f} \qquad \longrightarrow \qquad \underline{\frac{v_o}{v_s} = -\frac{R_f}{R_1}}$$

Chapter 5, Solution 24

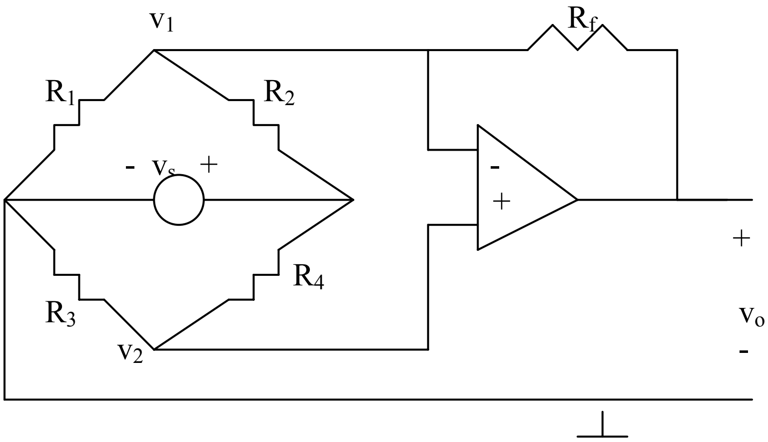

We notice that $v_1 = v_2$. Applying KCL at node 1 gives

$$\frac{v_1}{R_1} + \frac{(v_1 - v_s)}{R_2} + \frac{v_1 - v_o}{R_f} = 0 \qquad \longrightarrow \qquad \left(\frac{1}{R_1} + \frac{1}{R_2} + \frac{1}{R_f}\right)v_1 - \frac{v_s}{R_2} = \frac{v_o}{R_f} \qquad (1)$$

Applying KCL at node 2 gives

$$\frac{v_1}{R_3}+\frac{v_1-v_s}{R_4}=0 \quad \longrightarrow \quad v_1=\frac{R_3}{R_3+R_4}v_s \qquad (2)$$

Substituting (2) into (1) yields

$$v_o=R_f\left[\left(\frac{R_3}{R_1}+\frac{R_3}{R_f}-\frac{R_4}{R_2}\right)\left(\frac{R_3}{R_3+R_4}\right)-\frac{1}{R_2}\right]v_s$$

i.e.

$$\underline{k=R_f\left[\left(\frac{R_3}{R_1}+\frac{R_3}{R_f}-\frac{R_4}{R_2}\right)\left(\frac{R_3}{R_3+R_4}\right)-\frac{1}{R_2}\right]}$$

Chapter 5, Solution 25.

v_o = **<u>2 V</u>**

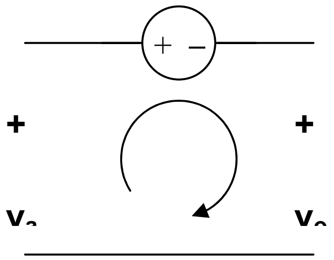

$-v_a + 3 + v_o = 0$ which leads to $v_a = v_o + 3 =$ **<u>5 V</u>**.

Chapter 5, Solution 26

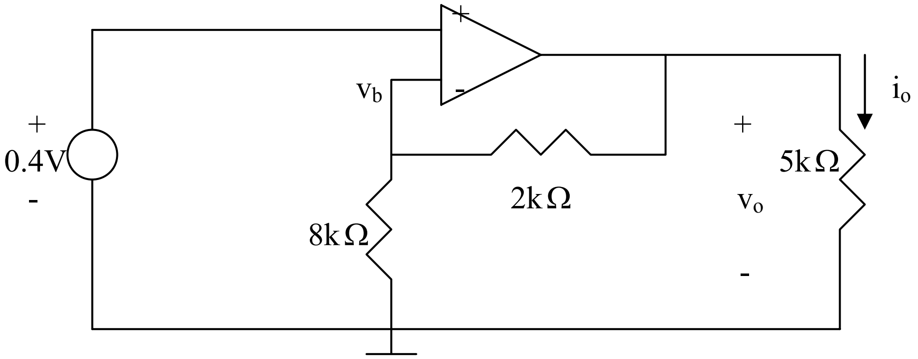

$$v_b = 0.4 = \frac{8}{8+2}v_o = 0.8v_o \quad \longrightarrow \quad v_o = 0.4/0.8 = 0.5\,\text{V}$$

Hence,

$$i_o = \frac{v_o}{5k} = \frac{0.5}{5k} = \underline{0.1\,\text{mA}}$$

Chapter 5, Solution 27.

(a) Let v_a be the voltage at the noninverting terminal.

$v_a = 2/(8+2)\ v_i = 0.2v_i$

$$v_0 = \left(1 + \frac{1000}{20}\right)v_a = 10.2v_i$$

$G = v_0/(v_i) = \underline{\mathbf{10.2}}$

(b) $v_i = v_0/(G) = 15/(10.2)\cos 120\pi t = \underline{\mathbf{1.471\ cos\ 120\pi t\ V}}$

Chapter 5, Solution 28.

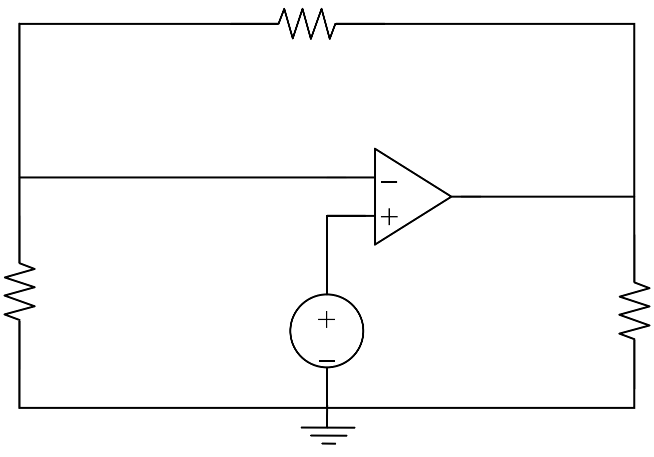

At node 1, $\dfrac{0 - v_1}{10k} = \dfrac{v_1 - v_o}{50k}$

But $v_1 = 0.4V$,

$-5v_1 = v_1 - v_o$, leads to $v_o = 6v_1 = \underline{\mathbf{2.4V}}$

Alternatively, viewed as a noninverting amplifier,

$v_o = (1 + (50/10))\ (0.4V) = \underline{\mathbf{2.4V}}$

$i_o = v_o/(20k) = 2.4/(20k) = \underline{\mathbf{120\ \mu A}}$

Chapter 5, Solution 29

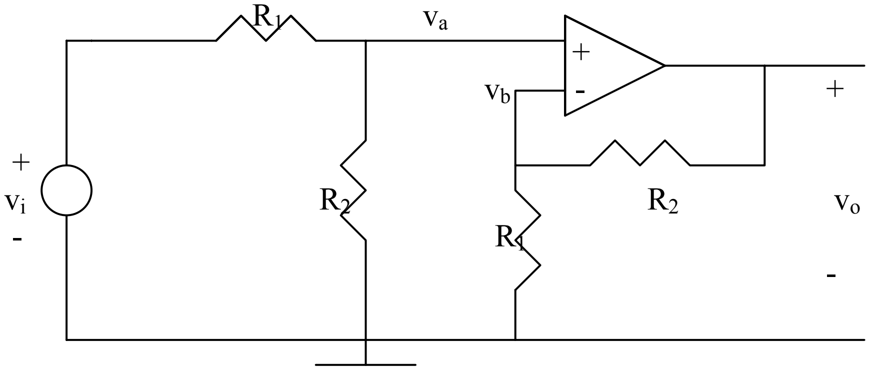

$$v_a = \frac{R_2}{R_1 + R_2} v_i, \qquad v_b = \frac{R_1}{R_1 + R_2} v_o$$

But $v_a = v_b$ $\longrightarrow$ $\frac{R_2}{R_1 + R_2} v_i = \frac{R_1}{R_1 + R_2} v_o$

Or

$$\underline{\frac{v_o}{v_i} = \frac{R_2}{R_1}}$$

Chapter 5, Solution 30.

The output of the voltage becomes

$$v_o = v_i = 12$$
$$30 \| 20 = 12\text{k}\Omega$$

By voltage division,

$$v_x = \frac{12}{12 + 60}(1.2) = 0.2\text{V}$$

$$i_x = \frac{v_x}{20\text{k}} = \frac{0.2}{20\text{k}} = \underline{\mathbf{10\mu A}}$$

$$p = \frac{v_x^2}{R} = \frac{0.04}{20\text{k}} = \underline{\mathbf{2\mu W}}$$

Chapter 5, Solution 31.

After converting the current source to a voltage source, the circuit is as shown below:

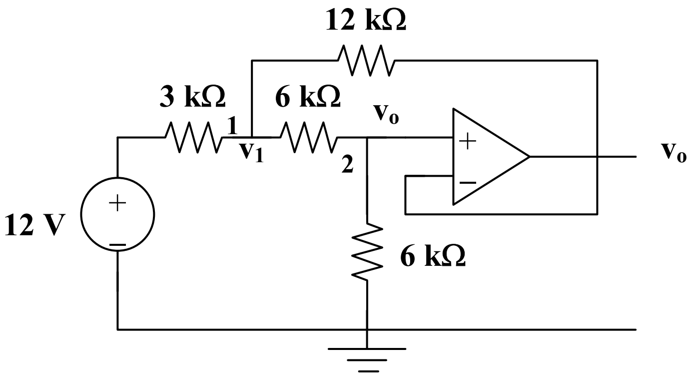

At node 1,

$$\frac{12 - v_1}{3} = \frac{v_1 - v_o}{6} + \frac{v_1 - v_o}{12} \longrightarrow 48 = 7v_1 - 3v_o \qquad (1)$$

At node 2,

$$\frac{v_1 - v_o}{6} = \frac{v_o - 0}{6} = i_x \longrightarrow v_1 = 2v_o \qquad (2)$$

From (1) and (2),

$$v_o = \frac{48}{11}$$

$$i_x = \frac{v_o}{6k} = \underline{\mathbf{0.7272mA}}$$

Chapter 5, Solution 32.

Let v_x = the voltage at the output of the op amp. The given circuit is a non-inverting amplifier.

$$v_x = \left(1 + \frac{50}{10}\right)(4 \text{ mV}) = 24 \text{ mV}$$

$$60 \| 30 = 20\text{k}\Omega$$

By voltage division,

$$v_o = \frac{20}{20+20} v_o = \frac{v_o}{2} = 12\text{mV}$$

$$i_x = \frac{v_x}{(20+20)k} = \frac{24\text{mV}}{40k} = \underline{\mathbf{600nA}}$$

$$p = \frac{v_o^2}{R} = \frac{144x10^{-6}}{60x10^{3}} = \underline{\mathbf{204nW}}$$

Chapter 5, Solution 33.

After transforming the current source, the current is as shown below:

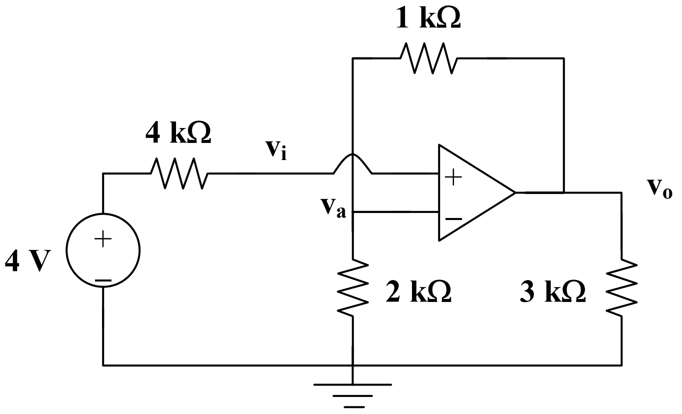

This is a noninverting amplifier.

$$v_o = \left(1 + \frac{1}{2}\right) v_i = \frac{3}{2} v_i$$

Since the current entering the op amp is 0, the source resistor has a OV potential drop. Hence $v_i = 4V$.

$$v_o = \frac{3}{2}(4) = 6V$$

Power dissipated by the 3kΩ resistor is

$$\frac{v_o^2}{R} = \frac{36}{3k} = \underline{\mathbf{12mW}}$$

$$i_x = \frac{v_a - v_o}{R} = \frac{4-6}{1k} = \underline{\mathbf{-2mA}}$$

Chapter 5, Solution 34

$$\frac{v_1 - v_{in}}{R_1} + \frac{v_1 - v_{in}}{R_2} = 0 \qquad (1)$$

but

$$v_a = \frac{R_3}{R_3 + R_4} v_o \qquad (2)$$

Combining (1) and (2),

$$v_1 - v_a + \frac{R_1}{R_2} v_2 - \frac{R_1}{R_2} v_a = 0$$

$$v_a\left(1 + \frac{R_1}{R_2}\right) = v_1 + \frac{R_1}{R_2} v_2$$

$$\frac{R_3 v_o}{R_3 + R_4}\left(1 + \frac{R_1}{R_2}\right) = v_1 + \frac{R_1}{R_2} v_2$$

$$v_o = \frac{R_3 + R_4}{R_3\left(1 + \frac{R_1}{R_2}\right)}\left(v_1 + \frac{R_1}{R_2} v_2\right)$$

$$\underline{v_O = \frac{R_3 + R_4}{R_3(R_1 + R_2)}(v_1 R_2 + v_2)}$$

Chapter 5, Solution 35.

$$A_v = \frac{v_o}{v_i} = 1 + \frac{R_f}{R_i} = 10 \longrightarrow R_f = 9R_i$$

If R_i = **<u>10kΩ</u>**, R_f = **<u>90kΩ</u>**

Chapter 5, Solution 36

$$V_{Th} = V_{ab}$$

But $v_s = \frac{R_1}{R_1 + R_2} V_{ab}$. Thus,

$$V_{Th} = V_{ab} = \frac{R_1 + R_2}{R_1} v_s = \underline{(1 + \frac{R_2}{R_1}) v_s}$$

To get R_{Th}, apply a current source I_o at terminals a-b as shown below.

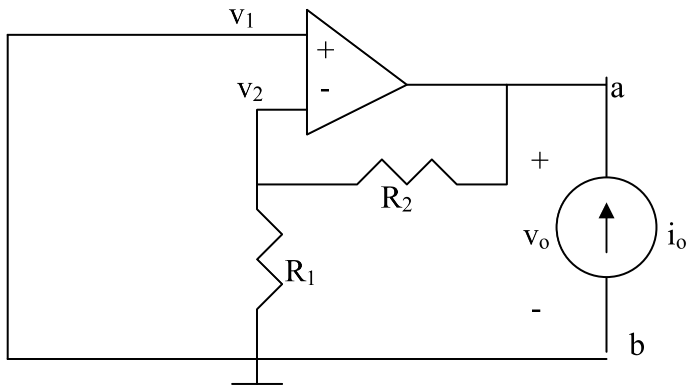

Since the noninverting terminal is connected to ground, $v_1 = v_2 = 0$, i.e. no current passes through R_1 and consequently R_2. Thus, $v_o = 0$ and

$$\underline{R_{Th} = \frac{v_o}{i_o} = 0}$$

Chapter 5, Solution 37.

$$v_o = -\left[\frac{R_f}{R_1} v_1 + \frac{R_f}{R_2} v_2 + \frac{R_f}{R_3} v_3\right]$$

$$= -\left[\frac{30}{10}(1) + \frac{30}{20}(2) + \frac{30}{30}(-3)\right]$$

v_o = **-3V**

Chapter 5, Solution 38.

$$v_o = -\left[\frac{R_f}{R_1}v_1 + \frac{R_f}{R_2}v_2 + \frac{R_f}{R_3}v_3 + \frac{R_f}{R_4}v_4\right]$$

$$= -\left[\frac{50}{25}(10) + \frac{50}{20}(-20) + \frac{50}{10}(50) + \frac{50}{50}(-100)\right]$$

= **-120mV**

Chapter 5, Solution 39

This is a summing amplifier.

$$v_o = -\left(\frac{R_f}{R_1}v_1 + \frac{R_f}{R_2}v_2 + \frac{R_f}{R_3}v_3\right) = -\left(\frac{50}{10}(2) + \frac{50}{20}v_2 + \frac{50}{50}(-1)\right) = -9 - 2.5v_2$$

Thus,

$$v_o = -16.5 = -9 - 2.5v_2 \longrightarrow \underline{v_2 = 3\text{ V}}$$

Chapter 5, Solution 40

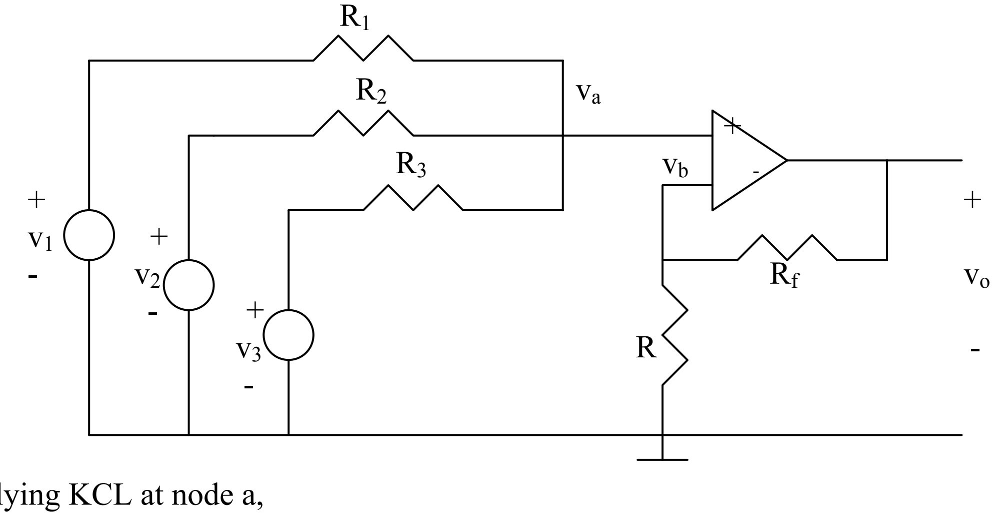

Applying KCL at node a,

$$\frac{v_1 - v_a}{R_1} + \frac{v_2 - v_a}{R_2} + \frac{v_3 - v_a}{R_3} = 0 \longrightarrow \frac{v_1}{R_1} + \frac{v_2}{R_2} + \frac{v_3}{R_3} = v_a\left(\frac{1}{R_1} + \frac{1}{R_2} + \frac{1}{R_3}\right) \quad (1)$$

But

$$v_a = v_b = \frac{R}{R+R_f} v_o \qquad (2)$$

Substituting (2) into (1)gives

$$\frac{v_1}{R_1} + \frac{v_2}{R_2} + \frac{v_3}{R_3} = \frac{Rv_o}{R+R_f}\left(\frac{1}{R_1} + \frac{1}{R_2} + \frac{1}{R_3}\right)$$

or

$$\underline{v_o = \frac{R+R_f}{R} \left(\frac{v_1}{R_1} + \frac{v_2}{R_2} + \frac{v_3}{R_3}\right) / \left(\frac{1}{R_1} + \frac{1}{R_2} + \frac{1}{R_3}\right)}$$

Chapter 5, Solution 41.

$R_f/R_i = 1/(4) \longrightarrow R_i = 4R_f = 40\text{k}\Omega$

The averaging amplifier is as shown below:

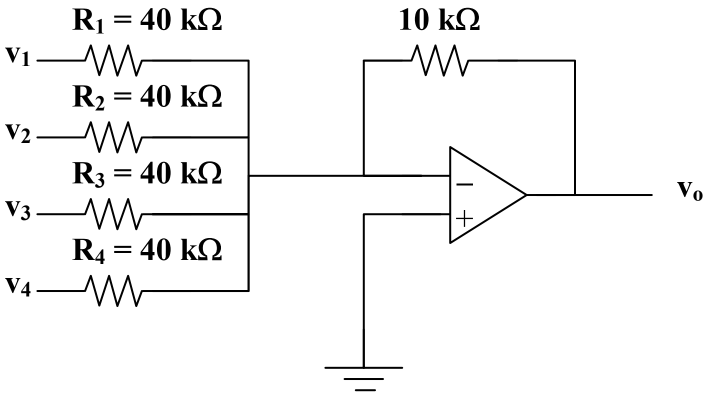

Chapter 5, Solution 42

$$R_f = \frac{1}{3} R_1 = \underline{10\,\text{k}\Omega}$$

Chapter 5, Solution 43.

In order for

$$v_o = \left(\frac{R_f}{R_1} v_1 + \frac{R_f}{R_2} v_2 + \frac{R_f}{R_3} v_3 + \frac{R_f}{R_4} v_4 \right)$$

to become

$$v_o = -\frac{1}{4}(v_1 + v_2 + v_3 + v_4)$$

$$\frac{R_f}{R_i} = \frac{1}{4} \longrightarrow R_f = \frac{R_i}{4} = \frac{12}{4} = \underline{\mathbf{3k\Omega}}$$

Chapter 5, Solution 44.

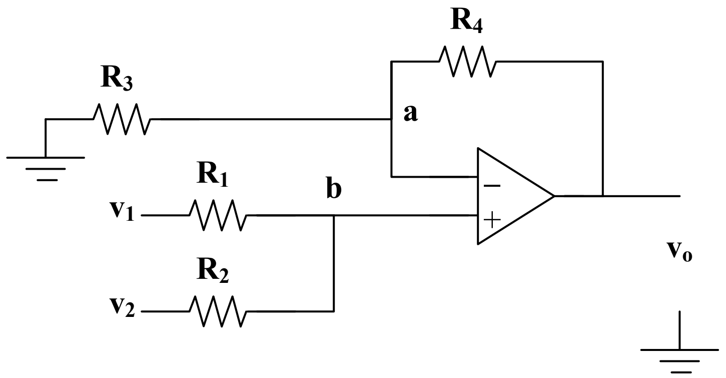

At node b, $\frac{v_b - v_1}{R_1} + \frac{v_b - v_2}{R_2} = 0 \longrightarrow v_b = \dfrac{\frac{v_1}{R_1} + \frac{v_2}{R_2}}{\frac{1}{R_1} + \frac{1}{R_2}}$ (1)

At node a, $\frac{0 - v_a}{R_3} = \frac{v_a - v_o}{R_4} \longrightarrow v_a = \frac{v_o}{1 + R_4 / R_3}$ (2)

But $v_a = v_b$. We set (1) and (2) equal.

$$\frac{v_o}{1 + R_4 / R_3} = \frac{R_2 v_1 + R_1 v_1}{R_1 + R_2}$$

or

$$v_o = \underline{\frac{(R_3 + R_4)}{R_3(R_1 + R_2)}(R_2 v_1 + R_1 v_1)}$$

Chapter 5, Solution 45.

This can be achieved as follows:

$$v_o = -\left[\frac{R}{R/3}(-v_1) + \frac{R}{R/2}v_2\right]$$

$$= -\left[\frac{R_f}{R_1}(-v_1) + \frac{R_f}{R_2}v_2\right]$$

i.e. $R_f = R$, $R_1 = R/3$, and $R_2 = R/2$

Thus we need an inverter to invert v_1, and a summer, as shown below ($R<100k\Omega$).

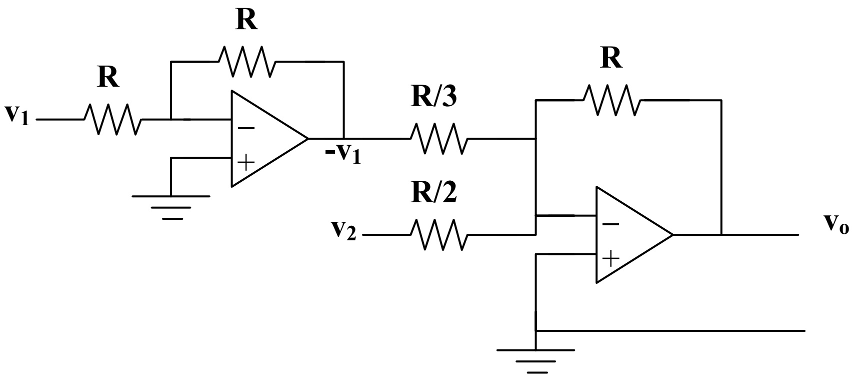

Chapter 5, Solution 46.

$$-v_o = \frac{v_1}{3} + \frac{1}{3}(-v_2) + \frac{1}{2}v_3 = \frac{R_f}{R_1}v_1 + \frac{R_x}{R_2}(-v_2) + \frac{R_f}{R_3}v_3$$

i.e. $R_3 = 2R_f$, $R_1 = R_2 = 3R_f$. To get $-v_2$, we need an inverter with $R_f = R_i$. If $R_f = 10k\Omega$, a solution is given below.

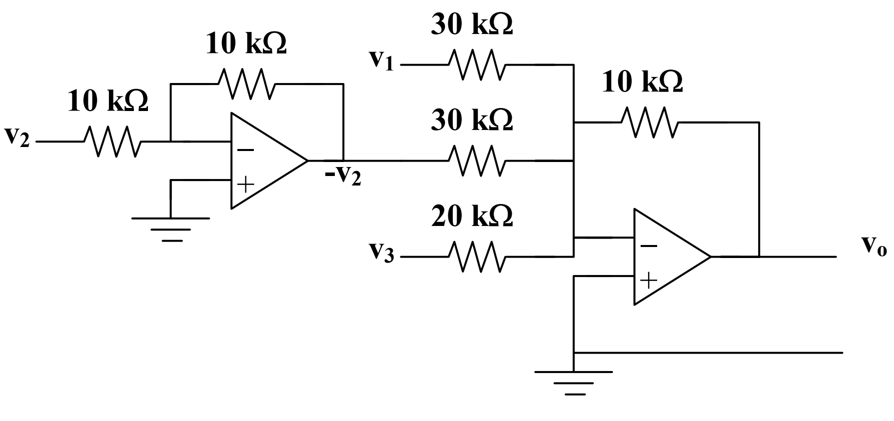

Chapter 5, Solution 47.

If a is the inverting terminal at the op amp and b is the noninverting terminal, then,

$$v_b = \frac{3}{3+1}(8) = 6\text{V}, v_a = v_b = 6\text{V} \quad \text{and at node a,} \frac{10 - v_a}{2} = \frac{v_a - v_o}{4}$$

which leads to $v_o =$ **-2 V** and $i_o = \frac{v_o}{5k} - \frac{(v_a - v_o)}{4k} = -0.4 - 2 \text{ mA} =$ **-2.4 mA**

Chapter 5, Solution 48.

Since the op amp draws no current from the bridge, the bridge may be treated separately as follows:

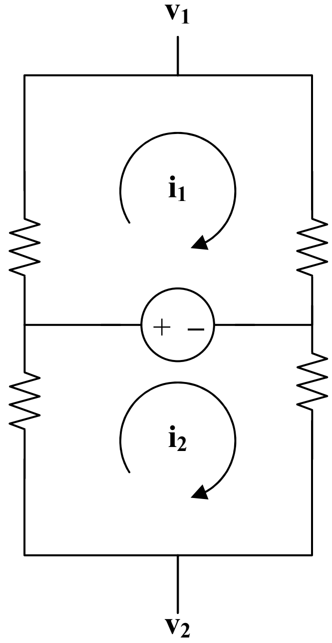

For loop 1, $(10 + 30)\, i_1 = 5 \longrightarrow i_1 = 5/(40) = 0.125\mu\text{A}$

For loop 2, $(40 + 60)\, i_2 = -5 \longrightarrow i_2 = -0.05\mu\text{A}$

But, $10i + v_1 - 5 = 0 \longrightarrow v_1 = 5 - 10i = 3.75\text{mV}$
$60i + v_2 + 5 = 0 \longrightarrow v_2 = -5 - 60i = -2\text{mV}$

As a difference amplifier,

$$v_o = \frac{R_2}{R_1}(v_2 - v_1) = \frac{80}{20}[3.75 - (-2)]\text{mV}$$

= **23mV**

Chapter 5, Solution 49.

$R_1 = R_3 = 10k\Omega$, $R_2/(R_1) = 2$

i.e. $R_2 = 2R_1 = 20k\Omega = R_4$

Verify: $$v_o = \frac{R_2}{R_1}\frac{1+R_1/R_2}{1+R_3/R_4}v_2 - \frac{R_2}{R_1}v_1$$

$$= 2\frac{(1+0.5)}{1+0.5}v_2 - 2v_1 = 2(v_2 - v_1)$$

Thus, $R_1 = R_3 =$ **<u>10kΩ</u>**, $R_2 = R_4 =$ **<u>20kΩ</u>**

Chapter 5, Solution 50.

(a) We use a difference amplifier, as shown below:

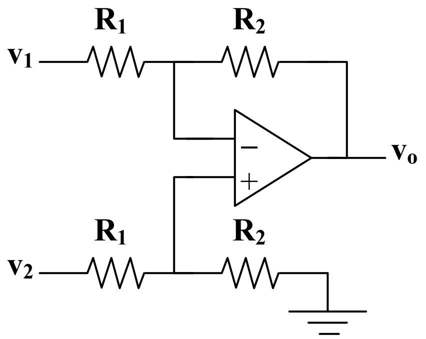

$$v_o = \frac{R_2}{R_1}(v_2 - v_1) = 2(v_2 - v_1), \text{ i.e. } R_2/R_1 = 2$$

If $R_1 =$ **<u>10 kΩ</u>** then $R_2 =$ **<u>20kΩ</u>**

(b) We may apply the idea in Prob. 5.35.

$$v_0 = 2v_1 - 2v_2$$
$$= -\left[\frac{R}{R/2}(-v_1) + \frac{R}{R/2}v_2\right]$$
$$= -\left[\frac{R_f}{R_1}(-v_1) + \frac{R_f}{R_2}v_2\right]$$

i.e. $R_f = R$, $R_1 = R/2 = R_2$

We need an inverter to invert v_1 and a summer, as shown below. We may let R = 10kΩ.

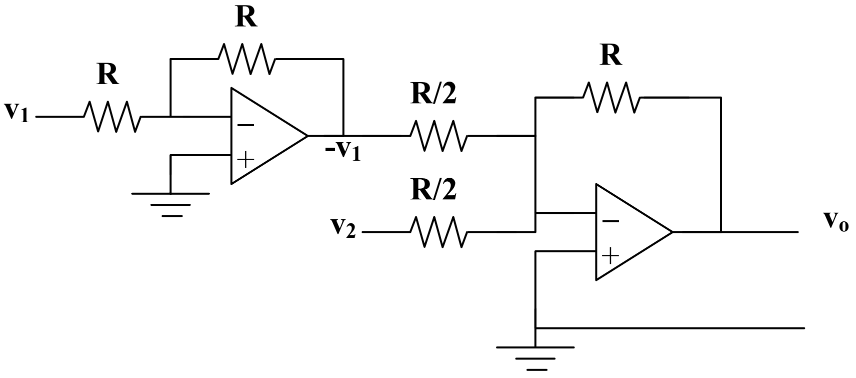

Chapter 5, Solution 51.

We achieve this by cascading an inverting amplifier and two-input inverting summer as shown below:

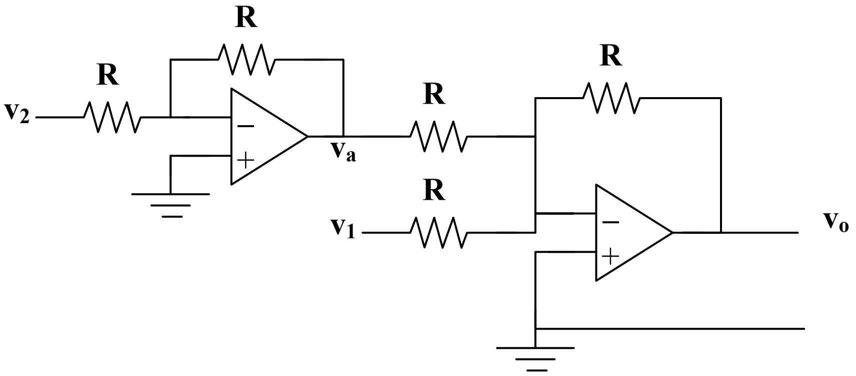

Verify: $v_o = -v_a - v_1$

But $v_a = -v_2$. Hence

$v_o = v_2 - v_1$.

Chapter 5, Solution 52

A summing amplifier shown below will achieve the objective. An inverter is inserted to invert v_2. Let $R = 10\ k\Omega$.

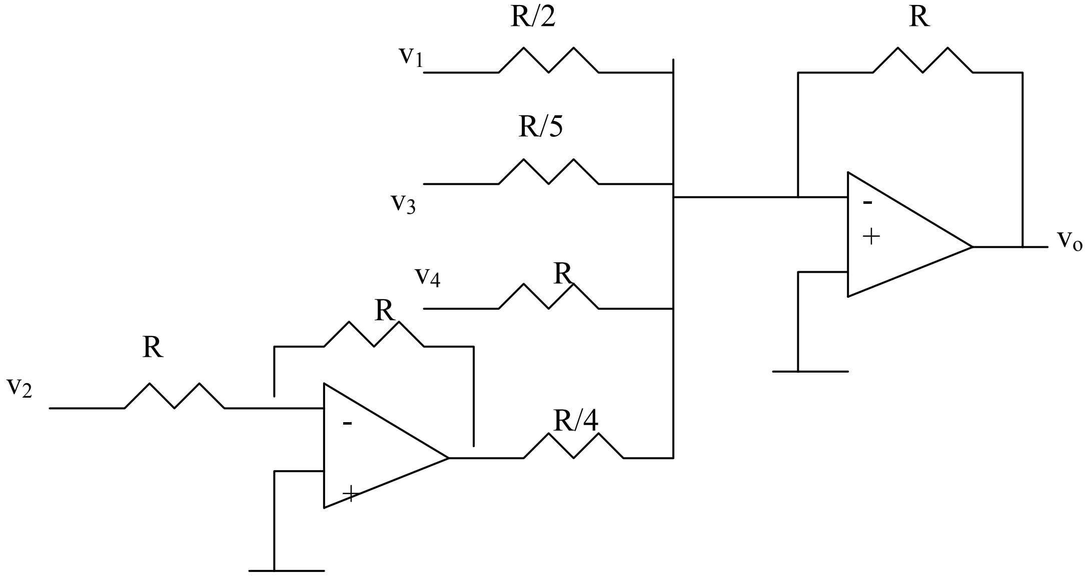

Chapter 5, Solution 53.

(a)

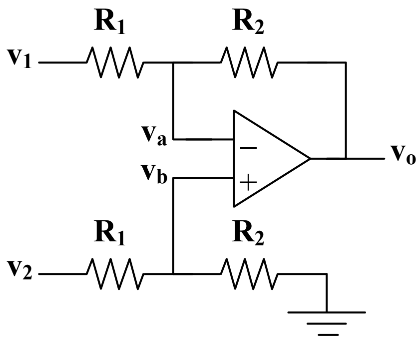

At node a, v

$$\longrightarrow \qquad = \qquad + \qquad (1)$$

At node b, $$v_b = \frac{R_2}{R_1 + R_2} v_2 \qquad (2)$$

But $v_a = v_b$. Setting (1) and (2) equal gives

$$\frac{R_2}{R_1 + R_2} v_2 = \frac{R_2 v_1 + R_1 v_o}{R_1 + R_2}$$

$$v_2 - v_1 = \frac{R_1}{R_2} v_o = v_i$$

$$\frac{v_o}{v_i} = \underline{\frac{R_2}{R_1}}$$

(b)

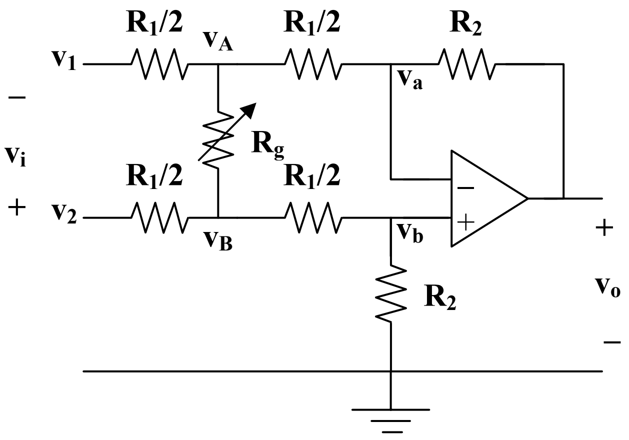

At node A, $$\frac{v_1 - v_A}{R_1/2} + \frac{v_B - v_A}{R_g} = \frac{v_A - v_a}{R_1/2}$$

or $$v_1 - v_A + \frac{R_1}{2R_g}\left(v_B - v_A\right) = v_A - v_a \qquad (1)$$

At node B, $$\frac{v_2 - v_B}{R_1/2} = \frac{v_B - v_A}{R_1/2} + \frac{v_B - v_b}{R_g}$$

or $$v_2 - v_B - \frac{R_1}{2R_g}(v_B - v_A) = v_B - v_b \qquad (2)$$

Subtracting (1) from (2),

$$v_2 - v_1 - v_B + v_A - \frac{2R_1}{2R_g}\left(v_B - v_A\right) = v_B - v_A - v_b + v_a$$

Since, $v_a = v_b$,

$$\frac{v_2 - v_1}{2} = \left(1 + \frac{R_1}{2R_g}\right)\left(v_B - v_A\right) = \frac{v_i}{2}$$

or $$v_B - v_A = \frac{v_i}{2} \cdot \frac{1}{1 + \frac{R_1}{2R_g}} \qquad (3)$$

But for the difference amplifier,

$$v_o = \frac{R_2}{R_1/2}\left(v_B - v_A\right)$$

or $$v_B - v_A = \frac{R_1}{2R_2} v_o \qquad (4)$$

Equating (3) and (4), $$\frac{R_1}{2R_2} v_o = \frac{v_i}{2} \cdot \frac{1}{1 + \frac{R_1}{2R_g}}$$

$$\underline{\frac{v_o}{v_i} = \frac{R_2}{R_1} \cdot \frac{1}{1 + \frac{R_1}{2R_g}}}$$

(c) At node a, $$\frac{v_1 - v_a}{R_1} = \frac{v_a - v_A}{R_2/2}$$

$$v_1 - v_a = \frac{2R_1}{R_2} v_a - \frac{2R_1}{R_2} v_A \qquad (1)$$

At node b, $$v_2 - v_b = \frac{2R_1}{R_2} v_b - \frac{2R_1}{R_2} v_B \qquad (2)$$

Since $v_a = v_b$, we subtract (1) from (2),

$$v_2 - v_1 = \frac{-2R_1}{R_2}(v_B - v_A) = \frac{v_i}{2}$$

or $$v_B - v_A = \frac{-R_2}{2R_1} v_i \qquad (3)$$

At node A,

$$\frac{v_a - v_A}{R_2/2} + \frac{v_B - v_A}{R_g} = \frac{v_A - v_o}{R/2}$$

$$v_a - v_A + \frac{R_2}{2R_g}\left(v_B - v_A\right) = v_A - v_o \qquad (4)$$

At node B, $\frac{v_b - v_B}{R/2} - \frac{v_B - v_A}{R_g} = \frac{v_B - 0}{R/2}$

$$v_b - v_B - \frac{R_2}{2R_g}(v_B - v_A) = v_B \qquad (5)$$

Subtracting (5) from (4),

$$v_B - v_A + \frac{R_2}{R_g}(v_B - v_A) = v_A - v_B - v_o$$

$$2(v_B - v_A)\left(1 + \frac{R_2}{2R_g}\right) = -v_o \qquad (6)$$

Combining (3) and (6),

$$\frac{-R_2}{R_1} v_i \left(1 + \frac{R_2}{2R_g}\right) = -v_o$$

$$\underline{\frac{v_o}{v_i} = \frac{R_2}{R_1}\left(1 + \frac{R_2}{2R_g}\right)}$$

Chapter 5, Solution 54.

(a) $A_0 = A_1A_2A_3 = (-30)(-12.5)(0.8) = 300$
(b) $A = A_1A_2A_3A_4 = A_0A_4 = 300A_4$

But $20Log_{10}A = 60dB \longrightarrow Log_{10}A = 3$

$A = 10^3 = 1000$
$A_4 = A/(300) =$ **<u>3.333</u>**

Chapter 5, Solution 55.

Let $A_1 = k$, $A_2 = k$, and $A_3 = k/(4)$
$A = A_1A_2A_3 = k^3/(4)$
$20Log_{10}A = 42$
$Log_{10}A = 2.1 \longrightarrow A = 10^{2.1} = 125.89$
$k^3 = 4A = 503.57$
$k = \sqrt[3]{503.57} = 7.956$

Thus $A_1 = A_2 =$ **<u>7.956</u>**, $A_3 =$ **<u>1.989</u>**

Chapter 5, Solution 56.

There is a cascading system of two inverting amplifiers.

$$v_o = \frac{-12}{4}\left(\frac{-12}{6}\right)v_s = 6v_s$$

$$i_o = \frac{v_s}{2k} = 3v_s mA$$

(a) When v_s = 12V, i_o = **36mA**

(b) When v_s = 10 cos 377t V, i_o = **30 cos 377t mA**

Chapter 5, Solution 57

The first stage is a difference amplifier. Since $R_1/R_2 = R_3/R_4$,

$$v_o{}' = \frac{R_2}{R_1}(v_2 - v_1) = \frac{100}{50}(1+4) = 10\,mA$$

The second stage is a non-inverter.

$$v_o = \left(1+\frac{R}{40}\right)v_o{}' = \left(1+\frac{R}{40}\right)10\,mA = 40\,mV(given)$$

Which leads to,

R = **120 kΩ**

Chapter 5, Solution 58.

By voltage division, the input to the voltage follower is:

$$v_1 = \frac{3}{3+1}(0.6) = 0.45V$$

Thus

$$v_o = \frac{-10}{2}v_1 - \frac{10}{5}v_1 = -7v_1 = -3.15$$

$$i_o = \frac{0 - v_o}{4k} = \mathbf{0.7875mA}$$

Chapter 5, Solution 59.

Let a be the node between the two op amps.

$v_a = v_o$

The first stage is a summer

$$v_a = \frac{-10}{5}v_s - \frac{10}{20}v_o = v_o$$
$$1.5v_s = -2v_s$$

or

$$\frac{v_o}{v_s} = \frac{-2}{1.5} = \underline{\mathbf{-1.333}}$$

Chapter 5, Solution 60.

Transform the current source as shown below:

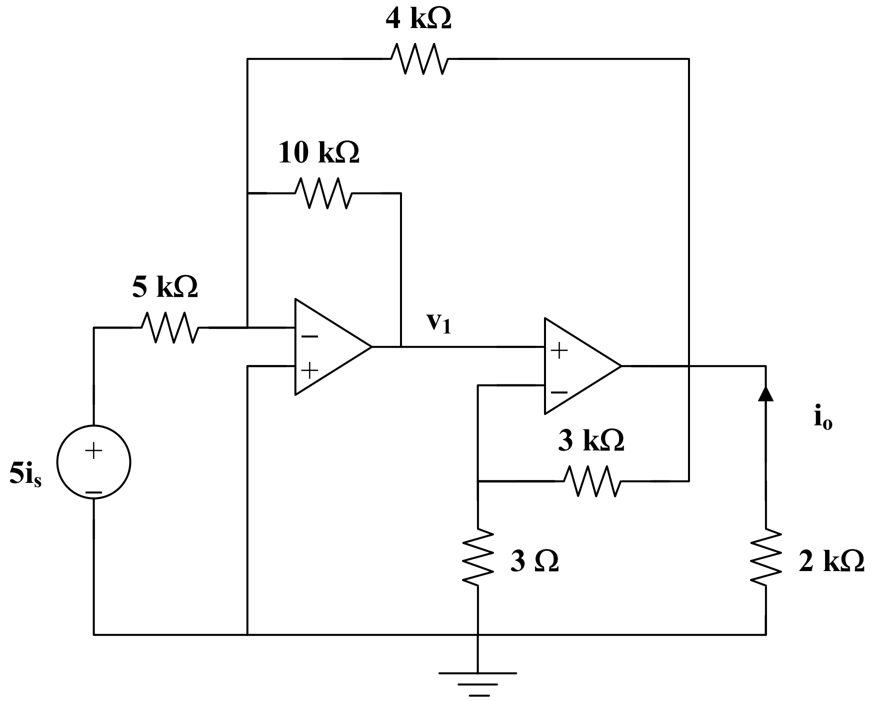

Assume all currents are in mA. The first stage is a summer

$$v_1 = \frac{-10}{5}(5i_s) - \frac{10}{4}v_o = -10i_s - 2.5v_o \qquad (1)$$

By voltage division,

$$v_1 = \frac{3}{3+3} v_o = \frac{1}{2} v_o \qquad (2)$$

Alternatively, we notice that the second stage is a non-inverter.

$$v_o = \left(\frac{1}{3+3}\right) v_1 = 2v_1$$

From (1) and (2),

$$0.5v_o = -10i_s - 2.5v_o \longrightarrow 3v_o = 10i_s$$

$$v_o = -2i_o = -\frac{10i_s}{3} \longrightarrow \frac{i_o}{i_s} = \frac{5}{3} = \underline{\mathbf{1.667}}$$

Chapter 5, Solution 61.

Let v_{01} be the voltage at the left end of R_5. The first stage is an inverter, while the second stage is a summer.

$$v_{01} = -\frac{R_2}{R_1} v_1$$

$$v_0 = -\frac{R_4}{R_5} v_{01} - \frac{R_4}{R_3} v_2$$

$$v_1 = \underline{\frac{R_2 R_4}{R_1 R_5} v_1 - \frac{R_4}{R_3} v_2}$$

Chapter 5, Solution 62.

Let v_1 = output of the first op amp
v_2 = output of the second op amp

The first stage is a summer

$$v_1 = -\frac{R_2}{R_1} v_i - \frac{R_2}{R_f} v_o \qquad (1)$$

The second stage is a follower. By voltage division

$$v_o = v_2 = \frac{R_4}{R_3 + R_4} v_1 \longrightarrow v_1 = \frac{R_3 + R_4}{R_4} v_o \qquad (2)$$

From (1) and (2),

$$\left(1 + \frac{R_3}{R_4}\right) v_o = -\frac{R_2}{R_1} v_i - \frac{R_2}{R_f} v_o$$

$$\left(1 + \frac{R_3}{R_4} + \frac{R_2}{R_f}\right) v_o = -\frac{R_2}{R_1} v_i$$

$$\frac{v_o}{v_i} = -\frac{R_2}{R_1} \cdot \frac{1}{1 + \frac{R_3}{R_4} + \frac{R_2}{R_4}}$$

$$= \frac{-R_2 R_4}{R_1 (R_2 + R_3 + R_4)}$$

Chapter 5, Solution 63.

The two op amps are summer. Let v_1 be the output of the first op amp. For the first stage,

$$v_1 = -\frac{R_2}{R_1} v_i - \frac{R_2}{R_3} v_o \qquad (1)$$

For the second stage,

$$v_o = -\frac{R_4}{R_5} v_1 - \frac{R_4}{R_o} v_i \qquad (2)$$

Combining (1) and (2),

$$v_o = \frac{R_4}{R_5}\left(\frac{R_2}{R_1}\right) v_i + \frac{R_4}{R_5}\left(\frac{R_2}{R_3}\right) v_o - \frac{R_4}{R_6} v_i$$

$$v_o \left(1 - \frac{R_2 R_4}{R_3 R_5}\right) = \left(\frac{R_2 R_4}{R_1 R_5} - \frac{R_4}{R_6}\right) v_i$$

$$\frac{v_o}{v_i} = \frac{\frac{R_2 R_4}{R_1 R_3} - \frac{R_4}{R_6}}{1 - \frac{R_2 R_4}{R_3 R_5}}$$

Chapter 5, Solution 64

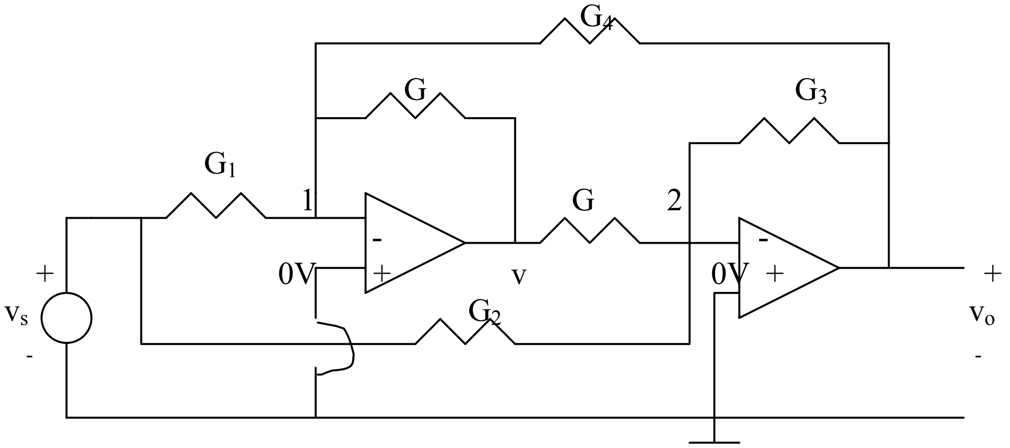

At node 1, $v_1=0$ so that KCL gives

$$G_1 v_s + G_4 v_o = -Gv \qquad (1)$$

At node 2,

$$G_2 v_s + G_3 v_o = -Gv \qquad (2)$$

From (1) and (2),

$$G_1 v_s + G_4 v_o = G_2 v_s + G_3 v_o \longrightarrow (G_1 - G_2)v_s = (G_3 - G_4)v_o$$

or

$$\underline{\frac{v_o}{v_s} = \frac{G_1 - G_2}{G_3 - G_4}}$$

Chapter 5, Solution 65

The output of the first op amp (to the left) is 6 mV. The second op amp is an inverter so that its output is

$$v_o' = -\frac{30}{10}(6\text{mV}) = \text{-18 mV}$$

The third op amp is a noninverter so that

$$v_o' = \frac{40}{40+8}v_o \longrightarrow v_o = \frac{48}{40}v_o' = \underline{-21.6\text{ mV}}$$

Chapter 5, Solution 66.

$$v_o = \frac{-110}{25}(6) - \frac{100}{20}\left(-\frac{40}{20}\right)(4) - \frac{100}{10}(2)$$
$$= -24 + 40 - 20 = \underline{\mathbf{-4V}}$$

Chapter 5, Solution 67.

$$v_o = -\frac{80}{40}\left(-\frac{80}{20}\right)(0.5) - \frac{80}{20}(0.2)$$
$$= 3.2 - 0.8 = \underline{\mathbf{2.4V}}$$

Chapter 5, Solution 68.

If $R_q = \infty$, the first stage is an inverter.

$$V_a = -\frac{15}{5}(10) = -30\text{mV}$$

when V_a is the output of the first op amp.

The second stage is a noninverting amplifier.

$$v_o = \left(1 + \frac{6}{2}\right)v_a = (1+3)(-30) = \underline{\mathbf{-120mV}}$$

Chapter 5, Solution 69.

In this case, the first stage is a summer

$$v_a = -\frac{15}{5}(10) - \frac{15}{10}v_o = -30 - 1.5v_o$$

For the second stage,

$$v_o = \left(1 + \frac{6}{2}\right)v_a = 4v_a = 4(-30 - 1.5v_o)$$

$$7v_o = -120 \longrightarrow v_o = -\frac{120}{7} = \underline{\mathbf{-17.143mV}}$$

Chapter 5, Solution 70.

The output of amplifier A is

$$v_A = -\frac{30}{10}(10) - \frac{30}{10}(2) = -9$$

The output of amplifier B is

$$v_B = -\frac{20}{10}(3) - \frac{20}{10}(4) = -14$$

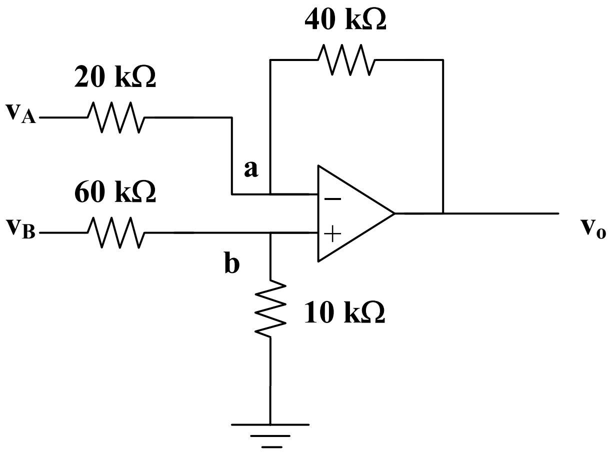

$$v_b = \frac{60}{60+10}(-14) = -2V$$

At node a, $\frac{v_A - v_a}{20} = \frac{v_a - v_o}{40}$

But $v_a = v_b = -2V$, $2(-9+2) = -2-v_o$

Therefore, $v_o =$ **<u>12V</u>**

Chapter 5, Solution 71

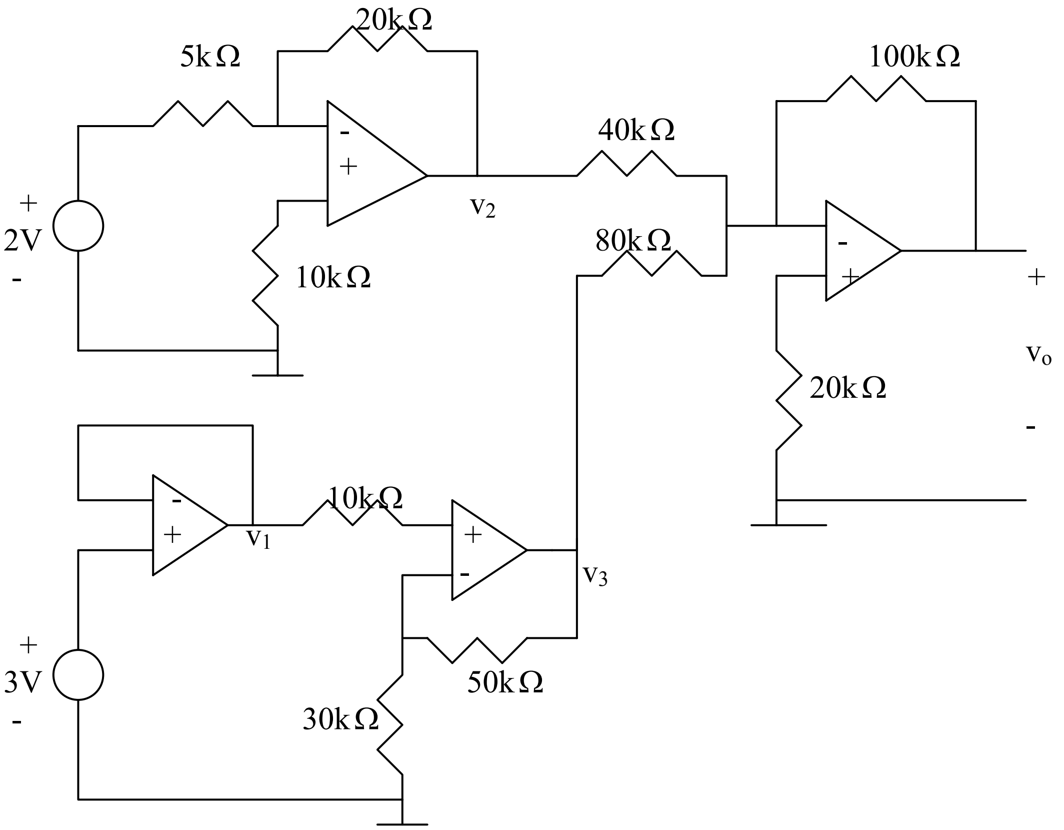

$$v_1 = 3, \quad v_2 = -\frac{20}{5}(2) = -8, \quad v_3 = (1+\frac{50}{30})v_1 = 8$$

$$v_o = -\left(\frac{100}{40}v_2 + \frac{100}{80}v_3\right) = -(-20+10) = \underline{10\text{ V}}$$

Chapter 5, Solution 72.

Since no current flows into the input terminals of ideal op amp, there is no voltage drop across the 20 kΩ resistor. As a voltage summer, the output of the first op amp is

$$v_{01} = 0.4$$

The second stage is an inverter

$$v_2 = -\frac{150}{100} v_{01}$$
$$= -2.5(0.4) = \underline{\mathbf{-1V}}$$

Chapter 5, Solution 73.

The first stage is an inverter. The output is

$$v_{01} = -\frac{50}{10}(-1.8) = -9V$$

The second stage is

$$v_2 = v_{01} = \underline{\mathbf{-9V}}$$

Chapter 5, Solution 74.

Let v_1 = output of the first op amp
v_2 = input of the second op amp.

The two sub-circuits are inverting amplifiers

$$v_1 = -\frac{100}{10}(0.6) = -6V$$
$$v_2 = -\frac{32}{1.6}(0.4) = -8V$$
$$i_o = \frac{v_1 - v_2}{20k} = -\frac{-6+8}{20k} = \underline{\mathbf{100\ \mu A}}$$

Chapter 5, Solution 75.

The schematic is shown below. Pseudo-components VIEWPOINT and IPROBE are involved as shown to measure v_o and i respectively. Once the circuit is saved, we click Analysis | Simulate. The values of v and i are displayed on the pseudo-components as:

$$i = \underline{\mathbf{200\ \mu A}}$$

$$(v_o/v_s) = -4/2 = -2$$

The results are slightly different than those obtained in Example 5.11.

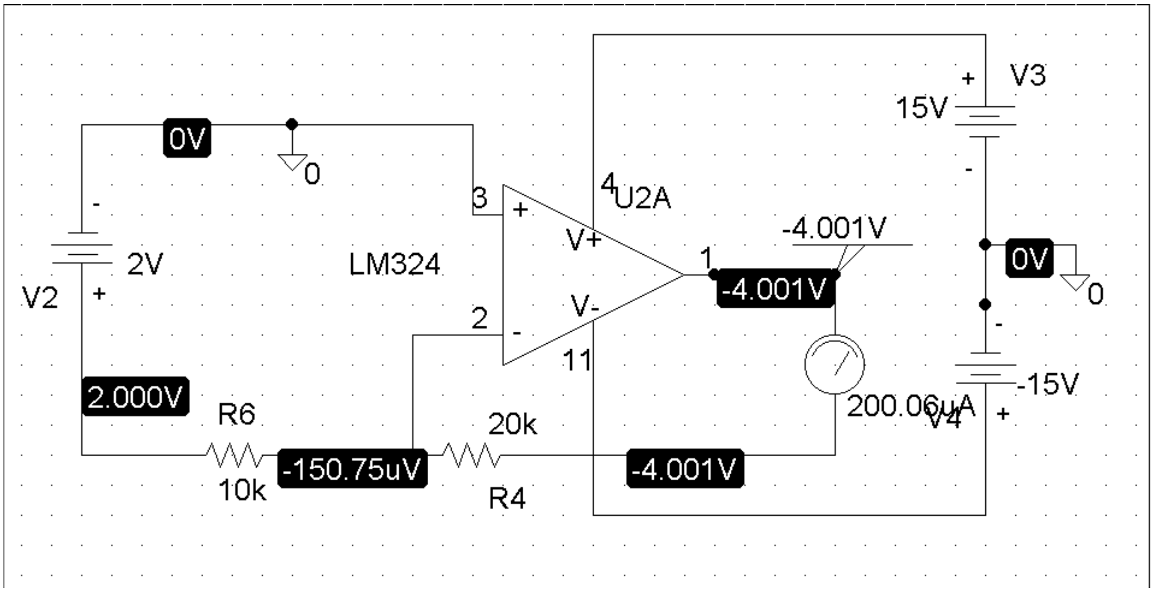

Chapter 5, Solution 76.

The schematic is shown below. IPROBE is inserted to measure i_o. Upon simulation, the value of i_o is displayed on IPROBE as

$$i_o = \underline{\mathbf{-374.78\ \mu A}}$$

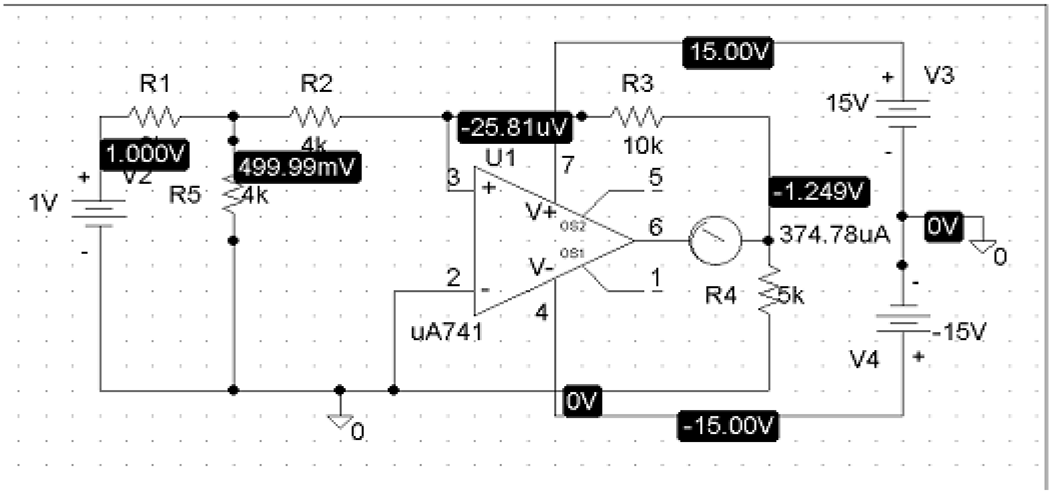

Chapter 5, Solution 77.

The schematic is shown below. IPROBE is inserted to measure i_o. Upon simulation, the value of i_o is displayed on IPROBE as

$$i_o = \underline{\mathbf{-374.78\ \mu A}}$$

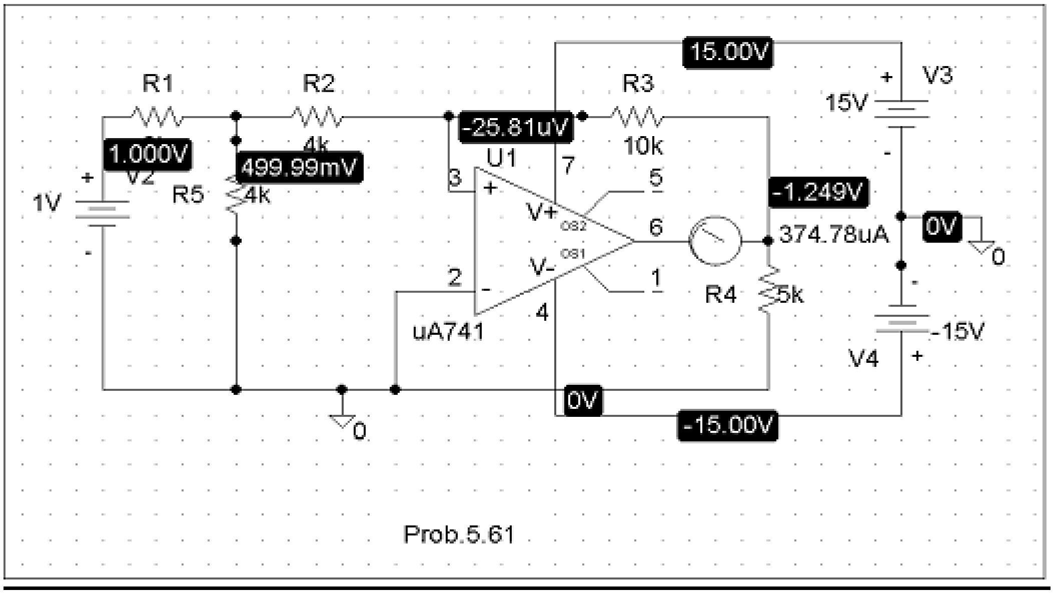

Chapter 5, Solution 78.

The circuit is constructed as shown below. We insert a VIEWPOINT to display v_o. Upon simulating the circuit, we obtain,

$$v_o = \underline{\mathbf{667.75\ mV}}$$

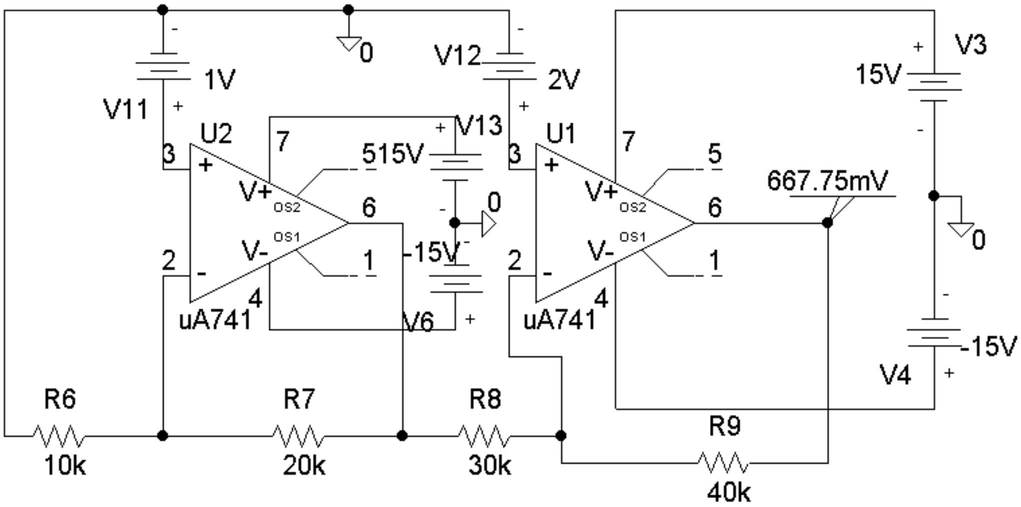

Chapter 5, Solution 79.

The schematic is shown below. A pseudo-component VIEWPOINT is inserted to display v_o. After saving and simulating the circuit, we obtain,

$$v_o = \underline{\mathbf{-14.61\ V}}$$

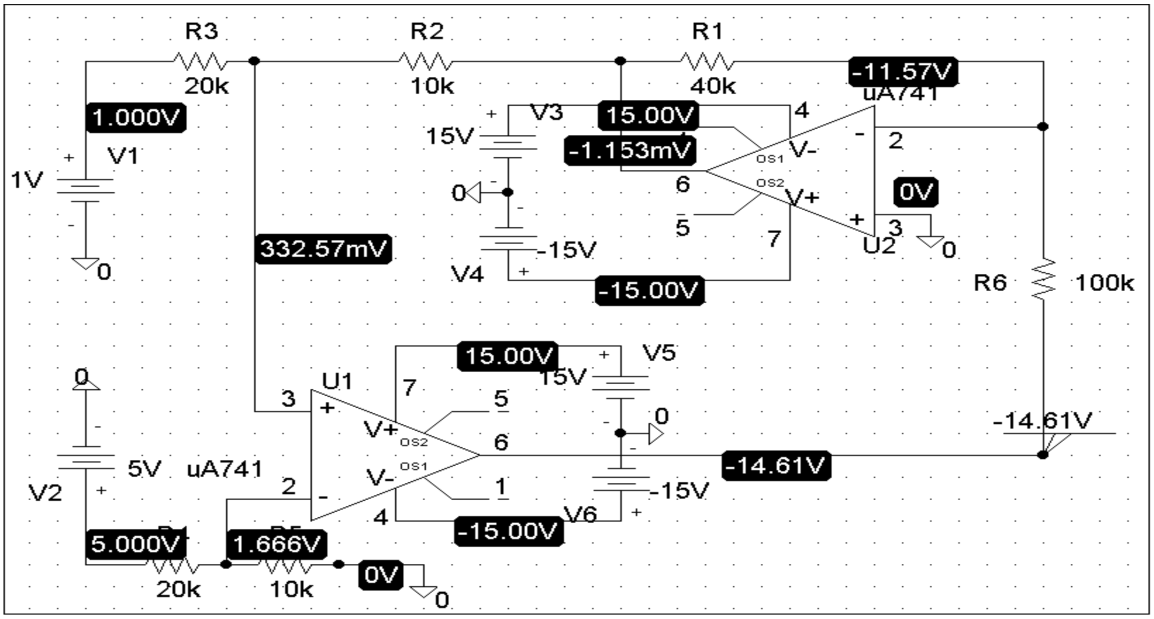

Chapter 5, Solution 80.

The schematic is shown below. VIEWPOINT is inserted to display v_o. After simulation, we obtain,

$$v_o = \underline{\mathbf{12\ V}}$$

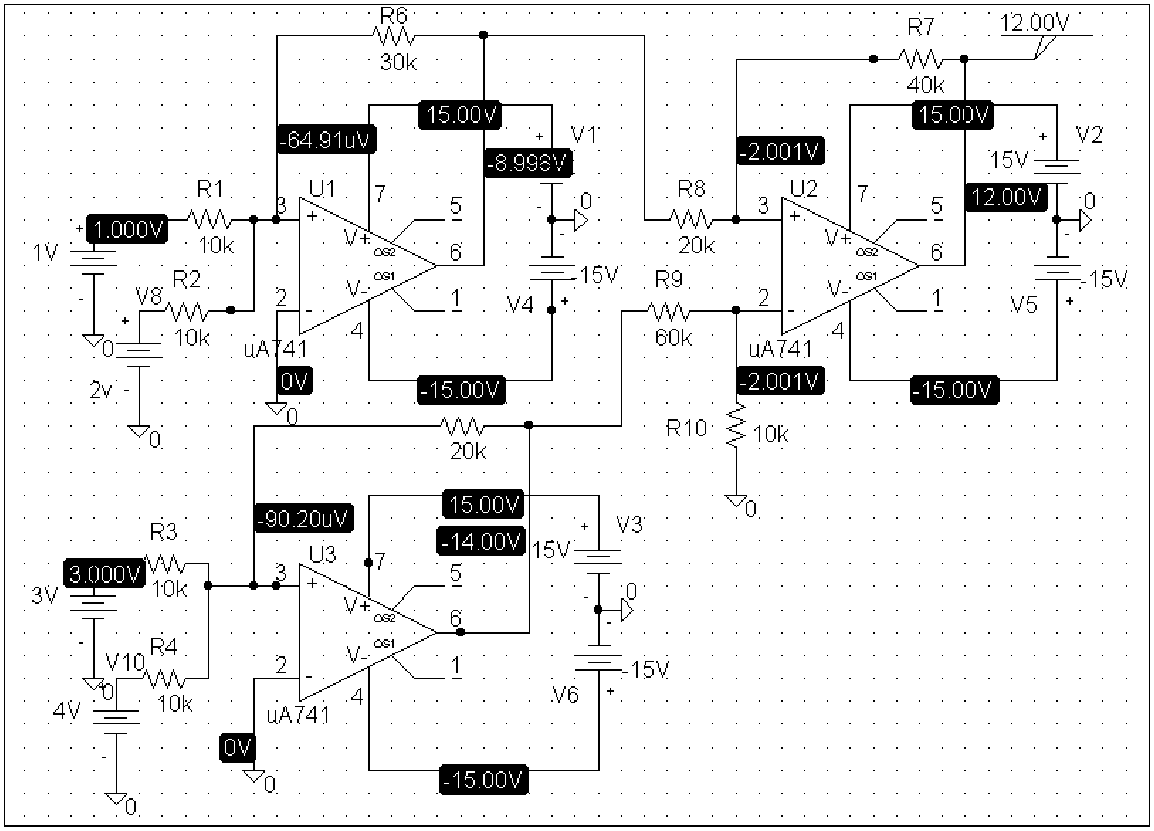

Chapter 5, Solution 81.

The schematic is shown below. We insert one VIEWPOINT and one IPROBE to measure v_o and i_o respectively. Upon saving and simulating the circuit, we obtain,

$$v_o = \underline{\mathbf{343.37\ mV}}$$

$$i_o = \underline{\mathbf{24.51\ \mu A}}$$

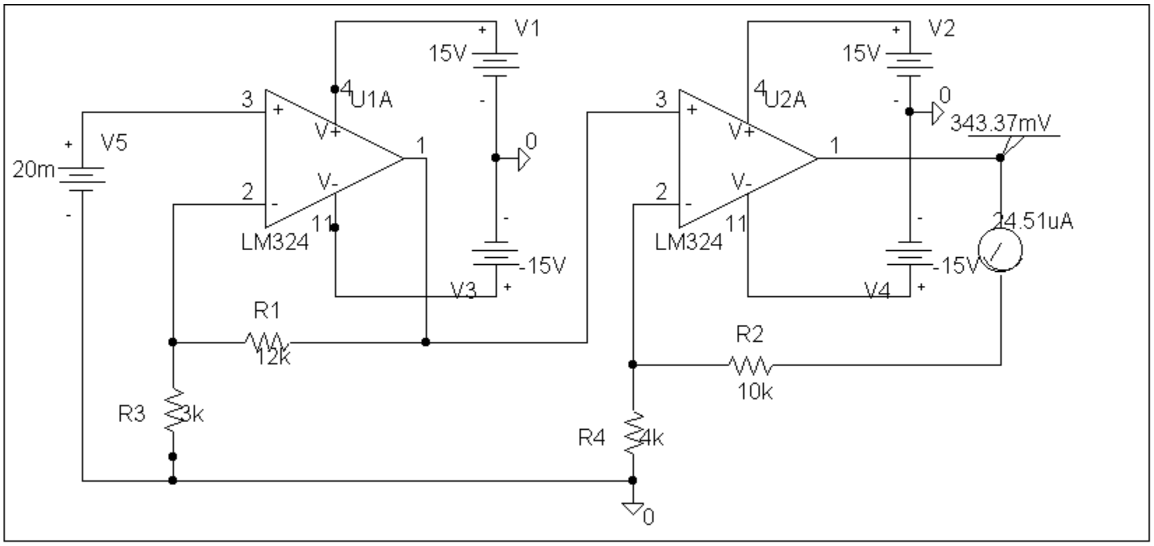

Chapter 5, Solution 82.

The maximum voltage level corresponds to

$$11111 = 2^5 - 1 = 31$$

Hence, each bit is worth $(7.75/31) = \underline{\textbf{250 mV}}$

Chapter 5, Solution 83.

The result depends on your design. Hence, let $R_G = 10$ k ohms, $R_1 = 10$ k ohms, $R_2 = 20$ k ohms, $R_3 = 40$ k ohms, $R_4 = 80$ k ohms, $R_5 = 160$ k ohms, $R_6 = 320$ k ohms, then,

$$-v_o = (R_f/R_1)v_1 + \text{---------} + (R_f/R_6)v_6$$

$$= v_1 + 0.5v_2 + 0.25v_3 + 0.125v_4 + 0.0625v_5 + 0.03125v_6$$

(a) $|v_o| = 1.1875 = 1 + 0.125 + 0.0625 = 1 + (1/8) + (1/16)$ which implies,

$$[v_1\ v_2\ v_3\ v_4\ v_5\ v_6] = \underline{\textbf{[100110]}}$$

(b) $|v_o| = 0 + (1/2) + (1/4) + 0 + (1/16) + (1/32) = (27/32) = \underline{\textbf{843.75 mV}}$

(c) This corresponds to [1 1 1 1 1 1].

$|v_o| = 1 + (1/2) + (1/4) + (1/8) + (1/16) + (1/32) = 63/32 = \underline{\textbf{1.96875 V}}$

Chapter 5, Solution 84.

For (a), the process of the proof is time consuming and the results are only approximate, but close enough for the applications where this device is used.

(a) The easiest way to solve this problem is to use superposition and to solve for each term letting all of the corresponding voltages be equal to zero. Also, starting with each current contribution (i_k) equal to one amp and working backwards is easiest.

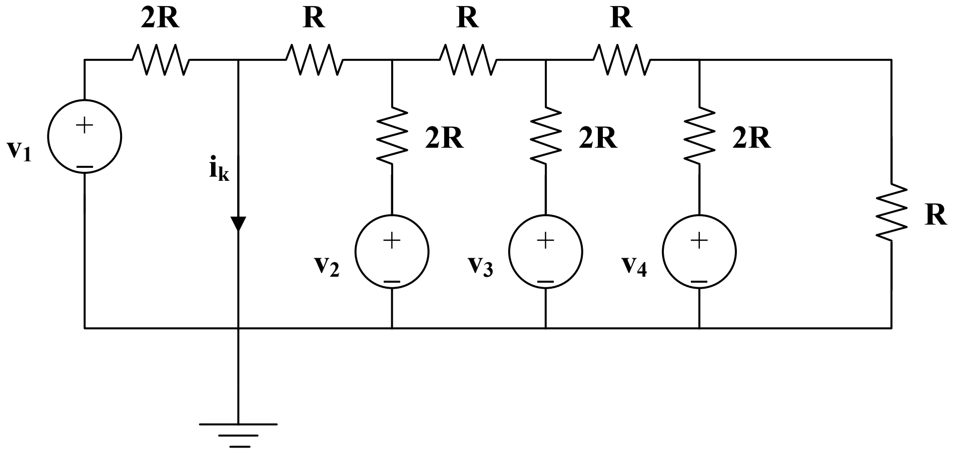

For the first case, let $v_2 = v_3 = v_4 = 0$, and $i_1 = 1A$.

Therefore, $v_1 = 2R$ volts or $i_1 = v_1/(2R)$.

Second case, let $v_1 = v_3 = v_4 = 0$, and $i_2 = 1A$.

Therefore, $v_2 = 85R/21$ volts or $i_2 = 21v_2/(85R)$. Clearly this is not ($1/4^{th}$), so where is the difference? $(21/85) = 0.247$ which is a really good approximation for 0.25. Since this is a practical electronic circuit, the result is good enough for all practical purposes.

Now for the third case, let $v_1 = v_2 = v_4 = 0$, and $i_3 = 1A$.

Therefore, $v_3 = 8.5R$ volts or $i_3 = v_3/(8.5R)$. Clearly this is not ($1/8^{th}$), so where is the difference? $(1/8.5) = 0.11765$ which is a really good approximation for 0.125. Since this is a practical electronic circuit, the result is good enough for all practical purposes.

Finally, for the fourth case, let $v_1 = v_2 = v_4 = 0$, and $i_3 = 1A$.

Therefore, $v_4 = 16.25R$ volts or $i_4 = v_4/(16.25R)$. Clearly this is not $(1/16^{th})$, so where is the difference? $(1/16.25) = 0.06154$ which is a really good approximation for 0.0625. Since this is a practical electronic circuit, the result is good enough for all practical purposes.

Please note that a goal of a lot of electronic design is to come up with practical circuits that are economical to design and build yet give the desired results.

(b) If $R_f = 12$ k ohms and $R = 10$ k ohms,

$$-v_o = (12/20)[v_1 + (v_2/2) + (v_3/4) + (v_4/8)]$$

$$= 0.6[v_1 + 0.5v_2 + 0.25v_3 + 0.125v_4]$$

For $[v_1\ v_2\ v_3\ v_4] = [1\ 0\ 11]$,

$$|v_o| = 0.6[1 + 0.25 + 0.125] = \underline{\mathbf{825\ mV}}$$

For $[v_1\ v_2\ v_3\ v_4] = [0\ 1\ 0\ 1]$,

$$|v_o| = 0.6[0.5 + 0.125] = \underline{\mathbf{375\ mV}}$$

Chapter 5, Solution 85.

$$A_v = 1 + (2R/R_g) = 1 + 20{,}000/100 = \underline{\mathbf{201}}$$

Chapter 5, Solution 86.

$$v_o = A(v_2 - v_1) = 200(v_2 - v_1)$$

(a) $v_o = 200(0.386 - 0.402) = \underline{\mathbf{-3.2\ V}}$

(b) $v_o = 200(1.011 - 1.002) = \underline{\mathbf{1.8\ V}}$

Chapter 5, Solution 87.

The output, v_a, of the first op amp is,

$$v_a = (1 + (R_2/R_1))v_1 \quad (1)$$

Also, $$v_o = (-R_4/R_3)v_a + (1 + (R_4/R_3))v_2 \quad (2)$$

Substituting (1) into (2),

$$v_o = (-R_4/R_3)(1 + (R_2/R_1))v_1 + (1 + (R_4/R_3))v_2$$

Or, $$v_o = \underline{\mathbf{(1 + (R_4/R_3))v_2 - (R_4/R_3 + (R_2R_4/R_1R_3))v_1}}$$

If $R_4 = R_1$ and $R_3 = R_2$, then,

$$v_o = (1 + (R_4/R_3))(v_2 - v_1)$$

which is a subtractor with a gain of $(1 + (R_4/R_3))$.

Chapter 5, Solution 88.

We need to find V_{Th} at terminals a – b, from this,

$$v_o = (R_2/R_1)(1 + 2(R_3/R_4))V_{Th} = (500/25)(1 + 2(10/2))V_{Th}$$

$$= 220V_{Th}$$

Now we use Fig. (b) to find V_{Th} in terms of v_i.

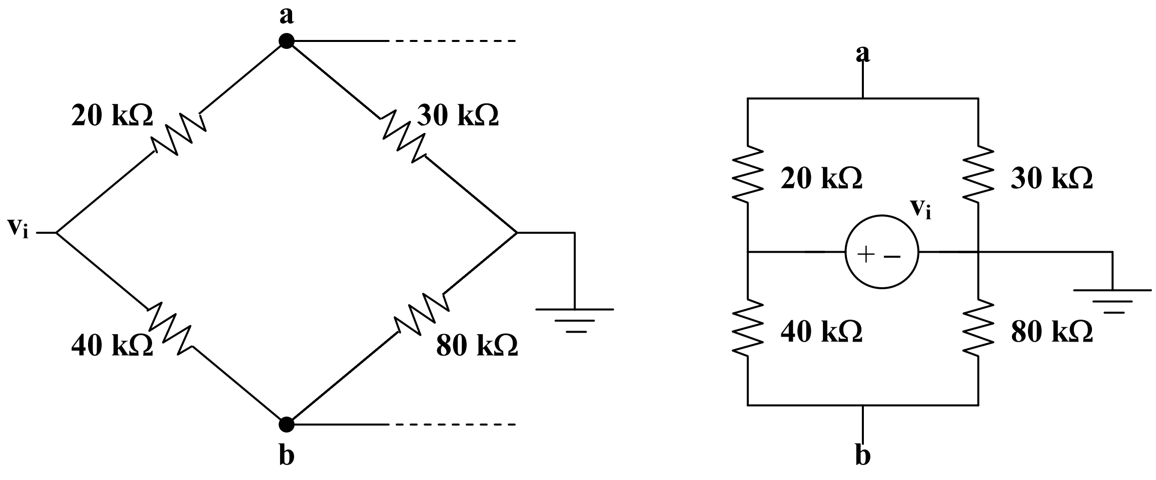

(a) (b)

$$v_a = (3/5)v_i, \quad v_b = (2/3)v_i$$

$$V_{Th} = v_b - v_a \;\; (1/15)v_i$$

$$(v_o/v_i) = A_v = -220/15 = \underline{\mathbf{-14.667}}$$

Chapter 5, Solution 89.

If we use an inverter, R = 2 k ohms,

$$(v_o/v_i) = -R_2/R_1 = -6$$

$$R = 6R = 12 \text{ k ohms}$$

Hence the op amp circuit is as shown below.

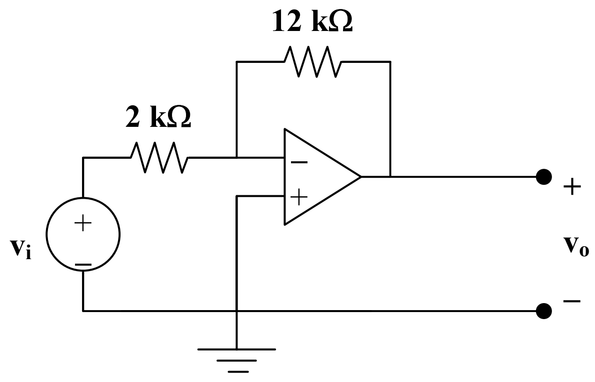

Chapter 5, Solution 90.

Transforming the current source to a voltage source produces the circuit below,
At node b, $v_b = (2/(2+4))v_o = v_o/3$

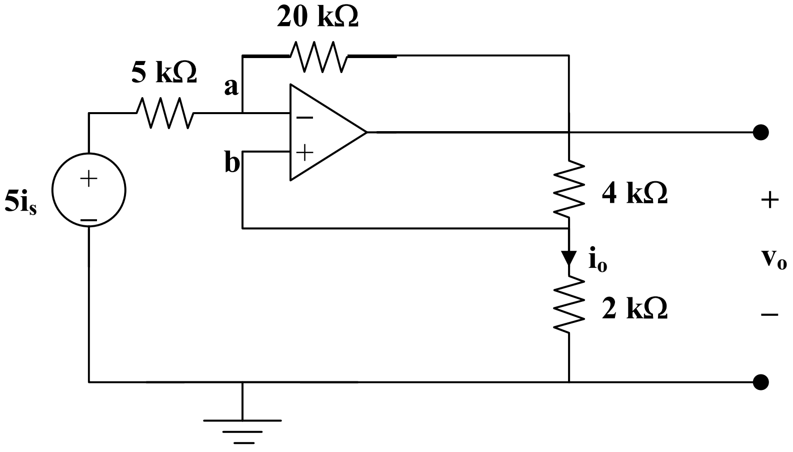

At node a, $(5i_s - v_a)/5 = (v_a - v_o)/20$

But $v_a = v_b = v_o/3$. $20i_s - (4/3)v_o = (1/3)v_o - v_o$, or $i_s = v_o/30$

$i_o = [(2/(2+4))/2]v_o = v_o/6$

$i_o/i_s = (v_o/6)/(v_o/30) = \underline{\mathbf{5}}$

Chapter 5, Solution 91.

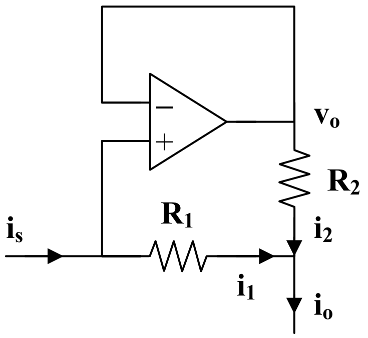

$$i_o = i_1 + i_2 \qquad (1)$$

But $$i_1 = i_s \qquad (2)$$

R_1 and R_2 have the same voltage, v_o, across them.

$$R_1 i_1 = R_2 i_2, \text{ which leads to } i_2 = (R_1/R_2)i_1 \qquad (3)$$

Substituting (2) and (3) into (1) gives,

$$i_o = i_s(1 + R_1/R_2)$$

$$i_o/i_s = 1 + (R_1/R_2) = 1 + 8/1 = \underline{\mathbf{9}}$$

Chapter 5, Solution 92

The top op amp circuit is a non-inverter, while the lower one is an inverter. The output at the top op amp is

$$v_1 = (1 + 60/30)v_i = 3v_i$$

while the output of the lower op amp is

$$v_2 = -(50/20)v_i = -2.5v_i$$

Hence, $$v_o = v_1 - v_2 = 3v_i + 2.5v_i = 5.5v_i$$

$$v_o/v_i = \underline{\mathbf{5.5}}$$

Chapter 5, Solution 93.

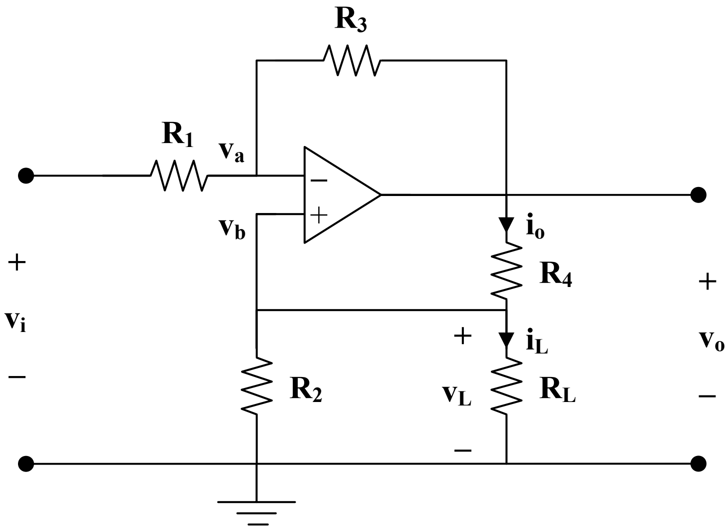

At node a, $(v_i - v_a)/R_1 = (v_a - v_o)/R_3$

$$v_i - v_a = (R_1/R_2)(v_a - v_o)$$

$$v_i + (R_1/R_3)v_o = (1 + R_1/R_3)v_a \qquad (1)$$

But $v_a = v_b = v_L$. Hence, (1) becomes

$$v_i = (1 + R_1/R_3)v_L - (R_1/R_3)v_o \qquad (2)$$

$$i_o = v_o/(R_4 + R_2||R_L),\ i_L = (R_L/(R_2 + R_L))i_o = (R_2/(R_2 + R_L))(v_o/(R_4 + R_2||R_L))$$

Or, $v_o = i_L[(R_2 + R_L)(R_4 + R_2||R_L)/R_2$ (3)

But, $v_L = i_L R_L$ (4)

Substituting (3) and (4) into (2),

$$v_i = (1 + R_1/R_3)\ i_L R_L - R_1[(R_2 + R_L)/(R_2R_3)](R_4 + R_2||R_L)i_L$$

$$= [((R_3 + R_1)/R_3)R_L - R_1((R_2 + R_L)/(R_2R_3)(R_4 + (R_2R_L/(R_2 + R_L))]i_L$$

$$= (1/A)i_L$$

Thus,

$$A = \frac{1}{\left(1+\frac{R_1}{R_3}\right)R_L - R_1\left(\frac{R_2+R_L}{R_2R_3}\right)\left(R_4+\frac{R_2R_L}{R_2+R_L}\right)}$$

Chapter 6, Solution 1.

$$i = C\frac{dv}{dt} = 5\left(2e^{-3t} - 6 + e^{-3t}\right) = \underline{10(1 - 3t)e^{-3t}\,A}$$

$$p = vi = 10(1\text{-}3t)e^{-3t} \cdot 2t\,e^{-3t} = \underline{20t(1 - 3t)e^{-6t}\,W}$$

Chapter 6, Solution 2.

$$w_1 = \frac{1}{2}Cv_1^2 = \frac{1}{2}(40)(120)^2$$
$$w_2 = \frac{1}{2}Cv_1^2 = \frac{1}{2}(40)(80)^2$$

$$\Delta w = w_1 - w_2 = 20\left(120^2 - 80^2\right) = \underline{\mathbf{160\ kW}}$$

Chapter 6, Solution 3.

$$i = C\frac{dv}{dt} = 40x10^{-3}\,\frac{280 - 160}{5} = \underline{\mathbf{480\ mA}}$$

Chapter 6, Solution 4.

$$v = \frac{1}{C}\int_o^t idt + v(0)$$

$$= \frac{1}{2}\int 6\sin 4tdt + 1$$

$$= \underline{\mathbf{1 - 0.75\cos 4t}}$$

Chapter 6, Solution 5.

$$v = \frac{1}{C}\int_o^t idt + v(0)$$

For $0 < t < 1$, $i = 4t$,

$$v = \frac{1}{20x10^{-6}}\int_o^t 4t\,dt + 0 = 100t^2\ kV$$

$$v(1) = 100\ kV$$

For 1 < t < 2, i = 8 - 4t,

$$v = \frac{1}{20x10^{-6}}\int_1^t (8-4t)dt + v(1)$$
$$= 100\ (4t - t^2 - 3) + 100\ kV$$

Thus
$$v\ (t) = \begin{cases} 100t^2 kV, & 0 < t < 1 \\ 100(4t - t^2 - 2)kV, & 1 < t < 2 \end{cases}$$

Chapter 6, Solution 6.

$i = C\frac{dv}{dt} = 30x10^{-6}$ x slope of the waveform.

For example, for 0 < t < 2,

$$\frac{dv}{dt} = \frac{10}{2x10^{-3}}$$

$$i = C\frac{dv}{dt} = 30x10^{-6} x \frac{10}{2x10^{-3}} = 150mA$$

Thus the current i is sketched below.

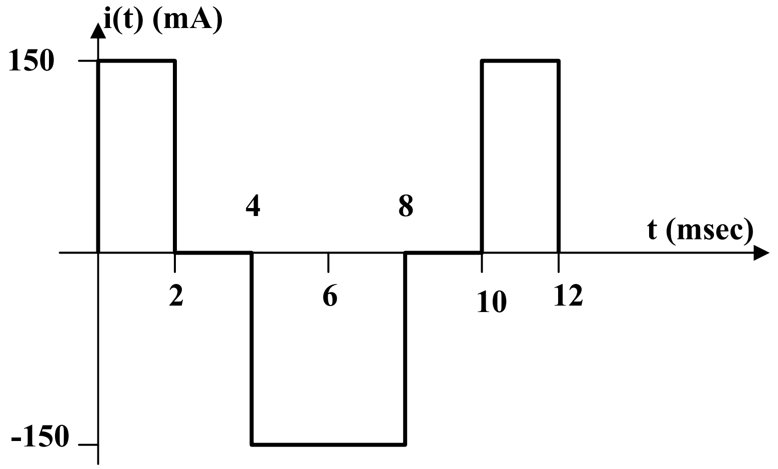

Chapter 6, Solution 7.

$$v = \frac{1}{C}\int idt + v(t_o) = \frac{1}{50x10^{-3}}\int_o^t 4tx10^{-3}dt + 10$$

$$= \frac{2t^2}{50} + 10 = \underline{\mathbf{0.04k^2 + 10\ V}}$$

Chapter 6, Solution 8.

(a) $i = C\dfrac{dv}{dt} = -100ACe^{-100t} - 600BCe^{-600t}$ (1)

$i(0) = 2 = -100AC - 600BC \longrightarrow 5 = -A - 6B$ (2)

$v(0^+) = v(0^-) \longrightarrow 50 = A + B$ (3)

Solving (2) and (3) leads to

A=61, B=-11

(b) $\text{Energy} = \dfrac{1}{2}Cv^2(0) = \dfrac{1}{2}x4x10^{-3}x2500 = \underline{5\text{ J}}$

(c) From (1),

$$i = -100x61x4x10^{-3}e^{-100t} - 600x11x4x10^{-3}e^{-600t} = \underline{-24.4e^{-100t} - 26.4e^{-600t}\text{ A}}$$

Chapter 6, Solution 9.

$$\text{v(t)} = \frac{1}{1/2}\int_o^t 6\left(1 - e^{-t}\right)dt + 0 = 12\left(t + e^{-t}\right)\text{V}$$

v(2) = 12(2 + e^{-2}) = **25.62 V**

p = iv = 12 (t + e^{-t}) 6 (1-e^{-t}) = 72(t-e^{-2t})

p(2) = 72(2-e^{-4}) = **142.68 W**

Chapter 6, Solution 10

$$i = C\frac{dv}{dt} = 2x10^{-3}\frac{dv}{dt}$$

$$v = \begin{cases} 16t, & 0 < t < 1\mu\text{s} \\ 16, & 1 < t < 3\ \mu\text{s} \\ 64 - 16t, & 3 < t < 4\mu\text{s} \end{cases}$$

$$\frac{dv}{dt} = \begin{cases} 16x10^6, & 0 < t < 1\mu s \\ 0, & 1 < t < 3\ \mu s \\ -16x10^6, & 3 < t < 4\mu s \end{cases}$$

$$i(t) = \begin{cases} 32\,kA, & 0 < t < 1\mu s \\ 0, & 1 < t < 3\ \mu s \\ -32\,kA, & 3 < t < 4\mu s \end{cases}$$

Chapter 6, Solution 11.

$$v = \frac{1}{C}\int_o^t idt + v(0)$$

For $0 < t < 1$,

$$v = \frac{1}{4x10^{-6}}\int_o^t 40x10^{-3}dt = 10t\ kV$$

$$v(1) = 10\ kV$$

For $1 < t < 2$,

$$v = \frac{1}{C}\int_1^t vdt + v(1) = 10kV$$

For $2 < t < 3$,

$$v = \frac{1}{4x10^{-6}}\int_2^t (-40x10^{-3})dt + v(2)$$

$$= -10t + 30kV$$

Thus

$$v(t) = \begin{bmatrix} 10t \cdot kV, & 0 < t < 1 \\ 10kV, & 1 < t < 2 \\ -10t + 30kV, & 2 < t < 3 \end{bmatrix}$$

Chapter 6, Solution 12.

$$i = C\frac{dv}{dt} = 3x10^{-3}x60(4\pi)(-\sin 4\pi\, t)$$

$$= \underline{\mathbf{-\ 0.7e\ \pi\ sin\ 4\pi t\ A}}$$

$$P = vi = 60(-0.72)\pi \cos 4\pi\, t \sin 4\pi\, t = -21.6\pi \sin 8\pi\, t\ W$$

$$W = \int_o^t pdt = -\int_o^{\frac{1}{8}} 21.6\pi \sin 8\pi\, t\, dt$$

$$= \frac{21.6\pi}{8\pi}\cos 8\pi \Big|_o^{1/8} = \underline{\mathbf{-5.4J}}$$

Chapter 6, Solution 13.

Under dc conditions, the circuit becomes that shown below:

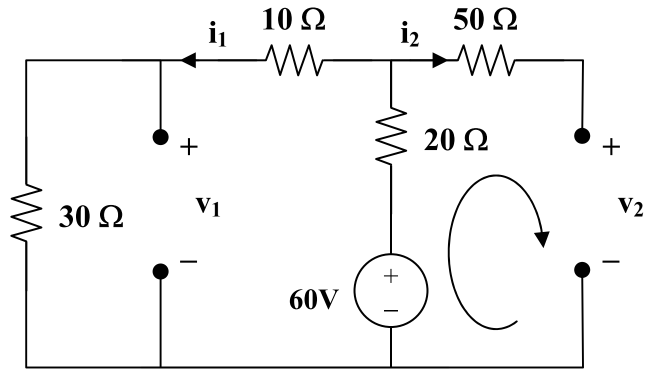

$i_2 = 0$, $i_1 = 60/(30+10+20) = 1\text{A}$

$v_1 = 30i_2 = 30\text{V}$, $v_2 = 60\text{-}20i_1 = 40\text{V}$

Thus, $\underline{\mathbf{v_1 = 30V,\ v_2 = 40V}}$

Chapter 6, Solution 14.

(a) $C_{eq} = 4C = \underline{\mathbf{120\ mF}}$

(b) $\dfrac{1}{C_{eq}} = \dfrac{4}{C} = \dfrac{4}{30} \longrightarrow C_{eq} = \underline{\mathbf{7.5\ mF}}$

Chapter 6, Solution 15.

In parallel, as in Fig. (a),

$v_1 = v_2 = 100$

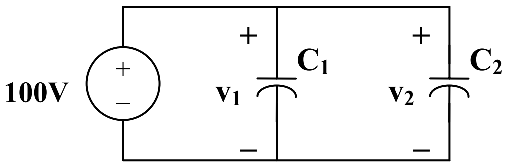

(a)

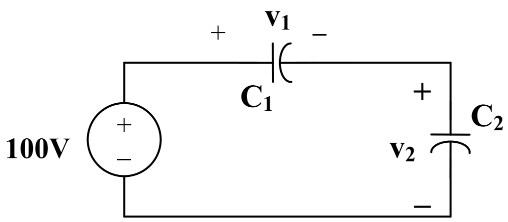

(b)

$w_{20} = \frac{1}{2}Cv^2 = \frac{1}{2}x20x10^{-6}x100^2$ = **0.1J**

$w_{30} = \frac{1}{2}x30x10^{-6}x100^2$ = **0.15J**

(b) When they are connected in series as in Fig. (b):

$$v_1 = \frac{C_2}{C_1 + C_2}V = \frac{30}{50}x100 = 60,\ v_2 = 40$$

$$w_{20} = \frac{1}{2}x30x10^{-6}x60^2 = \textbf{36 mJ}$$

$$w_{30} = \frac{1}{2}x30x10^{-6}x40^2 = \textbf{24 mJ}$$

Chapter 6, Solution 16

$$C_{eq} = 14 + \frac{Cx80}{C+80} = 30 \quad \longrightarrow \quad \underline{C = 20\ \mu\text{F}}$$

Chapter 6, Solution 17.

(a) 4F in series with 12F = 4 x 12/(16) = 3F
3F in parallel with 6F and 3F = 3+6+3 = 12F
4F in series with 12F = 3F
i.e. C_{eq} = **3F**

(b) C_{eq} = 5 + [6 || (4 + 2)] = 5 + (6 || 6) = 5 + 3 = **8F**

(c) 3F in series with 6F = (3 x 6)/9 = 6F

$$\frac{1}{C_{eq}} = \frac{1}{2} + \frac{1}{6} + \frac{1}{3} = 1$$

C_{eq} = **1F**

Chapter 6, Solution 18.

For the capacitors in parallel

$C^1_{eq} = 15 + 5 + 40 = 60\ \mu F$

Hence $\frac{1}{C_{eq}} = \frac{1}{20} + \frac{1}{30} + \frac{1}{60} = \frac{1}{10}$

$C_{eq} = \underline{\mathbf{10\ \mu F}}$

Chapter 6, Solution 19.

We combine 10-, 20-, and 30- μF capacitors in parallel to get 60 μF. The 60 - μF capacitor in series with another 60- μF capacitor gives 30 μF.

30 + 50 = 80 μF, 80 + 40 = 120 μF

The circuit is reduced to that shown below.

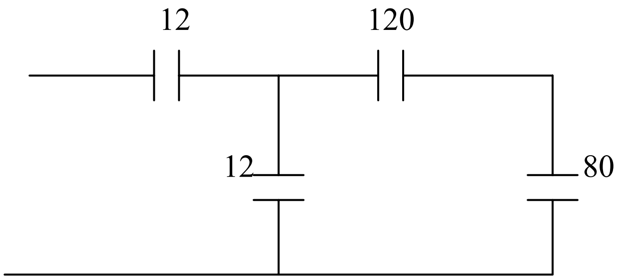

120- μF capacitor in series with 80 μF gives (80x120)/200 = 48

48 + 12 = 60

60- μF capacitor in series with 12 μF gives (60x12)/72 = $\underline{10\ \mu F}$

Chapter 6, Solution 20.

3 in series with 6 = $6x^3/(9) = 2$

2 in parallel with 2 = 4

4 in series with 4 = (4x4)/8 = 2

The circuit is reduced to that shown below:

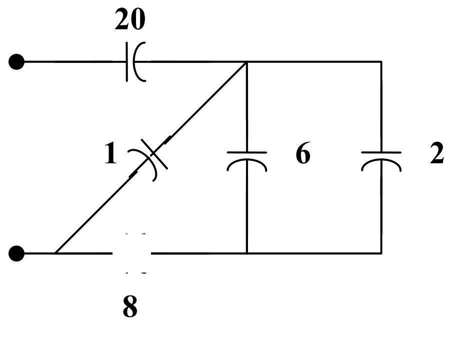

6 in parallel with 2 = 8
8 in series with 8 = 4
4 in parallel with 1 = 5
5 in series with 20 = (5x20)/25 = 4

Thus C_{eq} = **4 mF**

Chapter 6, Solution 21.

4μF in series with 12μF = (4x12)/16 = 3μF
3μF in parallel with 3μF = 6μF
6μF in series with 6μF = 3μF
3μF in parallel with 2μF = 5μF
5μF in series with 5μF = 2.5μF

Hence C_{eq} = **2.5μF**

Chapter 6, Solution 22.

Combining the capacitors in parallel, we obtain the equivalent circuit shown below:

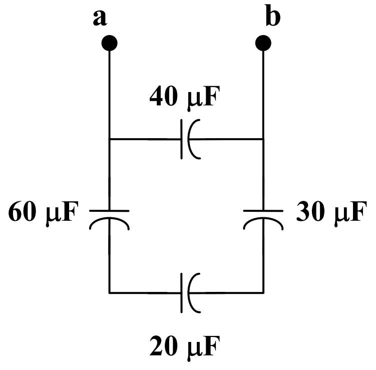

Combining the capacitors in series gives C^1_{eq}, where

$$\frac{1}{C^1_{eq}} = \frac{1}{60} + \frac{1}{20} + \frac{1}{30} = \frac{1}{10} \longrightarrow C^1_{eq} = 10\mu F$$

Thus

$$C_{eq} = 10 + 40 = \mathbf{50\ \mu F}$$

Chapter 6, Solution 23.

(a) 3μF is in series with 6μF   3x6/(9) = 2μF

$v_{4\mu F}$ = 1/2 x 120 = **60V**

$v_{2\mu F}$ = **60V**

$$v_{6\mu F} = \frac{3}{6+3}(60) = \mathbf{20V}$$

$v_{3\mu F}$ = 60 - 20 = **40V**

(b) Hence w = 1/2 Cv^2

$w_{4\mu F}$ = 1/2 x 4 x 10^{-6} x 3600 = **7.2mJ**

$w_{2\mu F}$ = 1/2 x 2 x 10^{-6} x 3600 = **3.6mJ**

$w_{6\mu F}$ = 1/2 x 6 x 10^{-6} x 400 = **1.2mJ**

$w_{3\mu F}$ = 1/2 x 3 x 10^{-6} x 1600 = **2.4mJ**

Chapter 6, Solution 24.

20μF is series with 80μF = 20x80/(100) = 16μF

14μF is parallel with 16μF = 30μF

(a) $v_{30\mu F}$ = **90V**

$v_{60\mu F}$ = **30V**

$v_{14\mu F}$ = **60V**

$$v_{20\mu F} = \frac{80}{20+80} \text{x} 60 = \mathbf{48V}$$

$v_{80\mu F}$ = 60 - 48 = **12V**

(b) Since $w = \frac{1}{2}Cv^2$

$w_{30\mu F}$ = 1/2 x 30 x 10^{-6} x 8100 = **121.5mJ**

$w_{60\mu F}$ = 1/2 x 60 x 10^{-6} x 900 = **27mJ**

$w_{14\mu F}$ = 1/2 x 14 x 10^{-6} x 3600 = **25.2mJ**

$w_{20\mu F}$ = 1/2 x 20 x 10^{-6} x $(48)^2$ = **23.04mJ**

$w_{80\mu F}$ = 1/2 x 80 x 10^{-6} x 144 = **5.76mJ**

Chapter 6, Solution 25.

(a) For the capacitors in series,

$$Q_1 = Q_2 \longrightarrow C_1 v_1 = C_2 v_2 \longrightarrow \frac{v_1}{v_2} = \frac{C_2}{C_1}$$

$$v_s = v_1 + v_2 = \frac{C_2}{C_1}v_2 + v_2 = \frac{C_1 + C_2}{C_1}v_2 \longrightarrow \underline{v_2 = \frac{C_1}{C_1 + C_2}v_s}$$

Similarly, $\underline{v_1 = \frac{C_2}{C_1 + C_2}v_s}$

(b) For capacitors in parallel

$$v_1 = v_2 = \frac{Q_1}{C_1} = \frac{Q_2}{C_2}$$

$$Q_s = Q_1 + Q_2 = \frac{C_1}{C_2}Q_2 + Q_2 = \frac{C_1 + C_2}{C_2}Q_2$$

or

$$Q_2 = \frac{C_2}{C_1 + C_2}$$

$$Q_1 = \frac{C_1}{C_1 + C_2}Q_s$$

$$i = \frac{dQ}{dt} \longrightarrow \underline{i_1 = \frac{C_1}{C_1 + C_2}i_s}, \quad \underline{i_2 = \frac{C_2}{C_1 + C_2}i_s}$$

Chapter 6, Solution 26.

(a) $C_{eq} = C_1 + C_2 + C_3 =$ **$\underline{35\mu F}$**

(b) $Q_1 = C_1 v = 5 \text{ x } 150\mu C =$ **$\underline{0.75mC}$**
$Q_2 = C_2 v = 10 \text{ x } 150\mu C =$ **$\underline{1.5mC}$**
$Q_3 = C_3 v = 20 \text{ x } 150 =$ **$\underline{3mC}$**

(c) $w = \frac{1}{2}C_{eq}v^2 = \frac{1}{2}x35x150^2\,\mu J =$ **$\underline{393.8mJ}$**

Chapter 6, Solution 27.

(a) $$\frac{1}{C_{eq}} = \frac{1}{C_1} + \frac{1}{C_2} + \frac{1}{C_3} = \frac{1}{5} + \frac{1}{10} + \frac{1}{20} = \frac{7}{20}$$

$$C_{eq} = \frac{20}{7}\mu F = \underline{\mathbf{2.857\mu F}}$$

(b) Since the capacitors are in series,

$$Q_1 = Q_2 = Q_3 = Q = C_{eq}v = \frac{20}{7} x 200\mu V = \underline{\mathbf{0.5714mV}}$$

(c) $$w = \frac{1}{2}C_{eq}v^2 = \frac{1}{2} x \frac{20}{7} x 200^2 \mu J = \underline{\mathbf{57.143mJ}}$$

Chapter 6, Solution 28.

We may treat this like a resistive circuit and apply delta-wye transformation, except that R is replaced by 1/C.

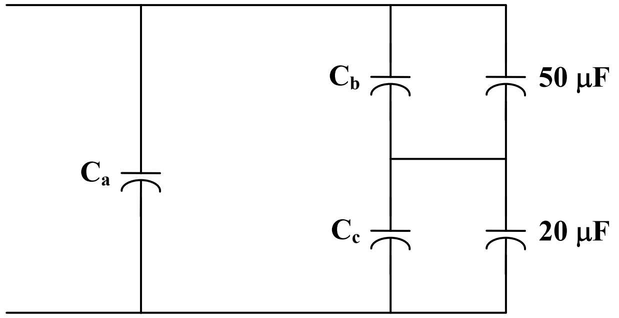

$$\frac{1}{C_a} = \frac{\left(\frac{1}{10}\right)\left(\frac{1}{40}\right) + \left(\frac{1}{10}\right)\left(\frac{1}{30}\right) + \left(\frac{1}{30}\right)\left(\frac{1}{40}\right)}{\frac{1}{30}}$$

$$= \frac{3}{40} + \frac{1}{10} + \frac{1}{40} = \frac{2}{10}$$

$C_a = 5\mu F$

$$\frac{1}{C_6} = \frac{\frac{1}{400} + \frac{1}{300} + \frac{1}{1200}}{\frac{1}{10}} = \frac{2}{30}$$

$C_b = 15\mu F$

$$\frac{1}{C_c} = \frac{\frac{1}{400} + \frac{1}{300} + \frac{1}{1200}}{\frac{1}{40}} = \frac{4}{15}$$

$C_c = 3.75\mu F$

C_b in parallel with $50\mu F = 50 + 15 = 65\mu F$

C_c in series with $20\mu F = 23.75\mu F$

$$65\mu F \text{ in series with } 23.75\mu F = \frac{65x23.75}{88.75} = 17.39\mu F$$

$17.39\mu F$ in parallel with $C_a = 17.39 + 5 = 22.39\mu F$

Hence C_{eq} = <u>**22.39μF**</u>

Chapter 6, Solution 29.

(a) C in series with C = C/(2)

C/2 in parallel with C = 3C/2

$$\frac{3C}{2} \text{ in series with } C = \frac{Cx\frac{3C}{2}}{5\frac{C}{2}} = \frac{3C}{5}$$

$$3\frac{C}{5} \text{ in parallel with } C = C + 3\frac{C}{5} = \underline{\mathbf{1.6\ C}}$$

(b)

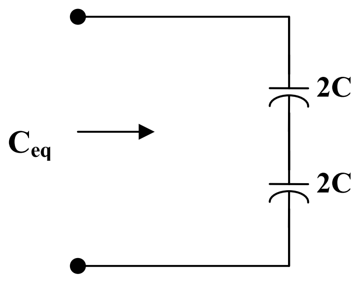

$$\frac{1}{C_{eq}} = \frac{1}{2C} + \frac{1}{2C} = \frac{1}{C}$$

C_{eq} = <u>**C**</u>

Chapter 6, Solution 30.

$$v_o = \frac{1}{C}\int_o^t idt + i(0)$$

For 0 < t < 1, i = 60t mA,

$$v_o = \frac{10^{-3}}{3x10^{-6}}\int_o^t 60tdt + 0 = 10t^2 kV$$

$$v_o(1) = 10kV$$

For 1< t < 2, i = 120 - 60t mA,

$$v_o = \frac{10^{-3}}{3x10^{-6}}\int_1^t (120 - 60t)dt + v_o(1)$$

$$= [40t – 10t^2]\Big|_1^t + 10kV$$

$$= 40t – 10t^2 - 20$$

$$v_o(t) = \begin{cases} 10t^2 kV, & 0 < t < 1 \\ 40t - 10t^2 - 20kV, & 1 < t < 2 \end{cases}$$

Chapter 6, Solution 31.

$$i_s(t) = \begin{cases} 20tmA, & 0 < t < 1 \\ 20mA, & 1 < t < 3 \\ -50 + 10t, & 3 < t < 5 \end{cases}$$

$$C_{eq} = 4 + 6 = 10\mu F$$

$$v = \frac{1}{C_{eq}}\int_o^t idt + v(0)$$

For 0 < t < 1,

$$v = \frac{10^{-3}}{10x10^{-6}}\int_o^t 20t\,dt + 0 = t^2\ kV$$

For 1 < t < 3,

$$v = \frac{10^3}{10}\int_1^t 20dt + v(1) = 2(t-1) + 1kV$$

$$= 2t - 1kV$$

For 3 < t < 5,

$$v = \frac{10^3}{10}\int_3^t 10(t-5)dt + v(3)$$

$$= t^2 - 5 + \Big|_3^t + 5kV = t^2 - 5t + 11kV$$

$$v(t) = \begin{cases} t^2 kV, & 0 < t < 1 \\ 2t - 1kV, & 1 < t < 3 \\ t^2 - 5t + 11kV, & 3 < t < 5 \end{cases}$$

$$i_1 = C_1 \frac{dv}{dt} = 6x10^{-6} \frac{dv}{dt}$$

$$= \begin{cases} 12tmA, & 0 < t < 1 \\ 12mA, & 1 < t < 3 \\ 12 - 30mA, & 3 < t < 5 \end{cases}$$

$$i_1 = C_2 \frac{dv}{dt} = 4x10^{-6} \frac{dv}{dt}$$

$$= \begin{cases} 8tmA, & 0 < t < 1 \\ 8mA, & 1 < t < 3 \\ 8t - 20mA, & 3 < t < 5 \end{cases}$$

Chapter 6, Solution 32.

(a) $C_{eq} = (12x60)/72 = 10\ \mu F$

$$v_1 = \frac{10^{-3}}{12x10^{-6}} \int_0^t 30e^{-2t} dt + v_1(0) = \underline{-1250e^{-2t} \Big|_0^t + 50} = \underline{-1250e^{-2t} + 1300}$$

$$v_2 = \frac{10^{-3}}{60x10^{-6}} \int_0^t 30e^{-2t} dt + v_2(0) = \underline{250e^{-2t} \Big|_0^t + 20} = \underline{250e^{-2t} - 230}$$

(b) At t=0.5s,

$$v_1 = -1250e^{-1} + 1300 = 840.15, \qquad v_2 = 250e^{-1} - 230 = -138.03$$

$$w_{12\mu F} = \frac{1}{2} x 12x10^{-6} x(840.15)^2 = \underline{4.235\ \ J}$$

$$w_{20\mu F} = \frac{1}{2} x 20x10^{-6} x(-138.03)^2 = \underline{0.1905\ J}$$

$$w_{40\mu F} = \frac{1}{2} x 40x10^{-6} x(-138.03)^2 = \underline{0.381\ J}$$

Chapter 6, Solution 33

Because this is a totally capacitive circuit, we can combine all the capacitors using the property that capacitors in parallel can be combined by just adding their values and we combine capacitors in series by adding their reciprocals.

3F + 2F = 5F

1/5 +1/5 = 2/5 or 2.5F

The voltage will divide equally across the two 5F capacitors. Therefore, we get:

$$V_{Th} = \underline{7.5\text{ V}}, \quad C_{Th} = \underline{2.5\text{ F}}$$

Chapter 6, Solution 34.

$i = 6e^{-t/2}$

$$v = L\frac{di}{dt} = 10x10^{-3}(6)\left(\frac{1}{2}\right)e^{-t/2}$$

$= -30e^{-t/2}$ mV

$v(3) = -300e^{-3/2}$ mV = **$\underline{-0.9487\text{ mV}}$**

$p = vi = -180e^{-t}$ mW

$p(3) = -180e^{-3}$ mW = **$\underline{-0.8\text{ mW}}$**

Chapter 6, Solution 35.

$$v = L\frac{di}{dt} \qquad L = \frac{V}{\Delta i/\Delta t} = \frac{60x10^{-3}}{0.6/(2)} = \underline{200\text{ mH}}$$

Chapter 6, Solution 36.

$$v = L\frac{di}{dt} = \frac{1}{4}x10^{-3}(12)(2)(-\sin 2t)V$$

$= \underline{\textbf{- 6 sin 2t mV}}$

p = vi = -72 sin 2t cos 2t mW

But   2 sin A cos A = sin 2A

$\underline{\textbf{p = -36 sin 4t mW}}$

Chapter 6, Solution 37.

$$v = L\frac{di}{dt} = 12x10^{-3}x4(100)\cos 100t$$

= 4.8 cos 100t V

p = vi = 4.8 x 4 sin 100t cos 100t = 9.6 sin 200t

$$w = \int_o^t pdt = \int_o^{11/200} 9.6\sin 200t$$

$$= -\frac{9.6}{200}\cos 200t\Big|_o^{11/200} J$$

$$= -48(\cos\pi - 1)mJ = \underline{\textbf{ 96 mJ}}$$

Chapter 6, Solution 38.

$$v = L\frac{di}{dt} = 40x10^{-3}\left(e^{-2t} - 2te^{-2t}\right)dt$$

$$= \underline{40(1-2t)e^{-2t}mV, t > 0}$$

Chapter 6, Solution 39

$$v = L\frac{di}{dt} \longrightarrow i = \frac{1}{L}\int_0^t i dt + i(0)$$

$$i = \frac{1}{200x10^{-3}}\int_0^t (3t^2 + 2t + 4)dt + 1$$

$$= 5(t^3 + t^2 + 4t)\Big|_0^t + 1$$

i(t) = **$5t^3 + 5t^2 + 20t + 1$ A**

Chapter 6, Solution 40

$$v = L\frac{di}{dt} = 20x10^{-3}\frac{di}{dt}$$

$$i = \begin{cases} 10t, & 0 < t < 1\,\text{ms} \\ 20 - 10t, & 1 < t < 3\,\text{ms} \\ -40 + 10t, & 3 < t < 4\,\text{ms} \end{cases}$$

$$\frac{di}{dt} = \begin{cases} 10x10^3, & 0 < t < 1\,\text{ms} \\ -10x10^3, & 1 < t < 3\,\text{ms} \\ 10x10^3, & 3 < t < 4\,\text{ms} \end{cases}$$

$$v = \begin{cases} 200\text{ V}, & 0 < t < 1\,\text{ms} \\ -200\text{ V}, & 1 < t < 3\,\text{ms} \\ 200\text{ V}, & 3 < t < 4\,\text{ms} \end{cases}$$

which is sketched below.

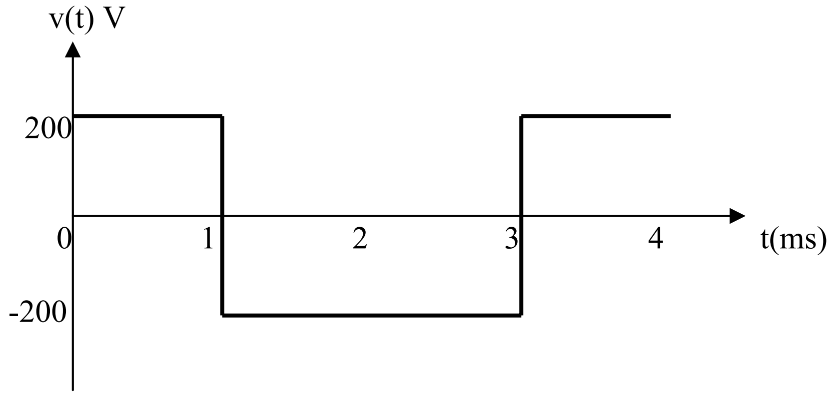

Chapter 6, Solution 41.

$$i = \frac{1}{L}\int_0^t v dt + i(0) = \left(\frac{1}{2}\right)\int_o^t 20\left(1 - 2^{-2t}\right)dt + 0.3$$

$$= 10\left(t + \frac{1}{2}e^{-2t}\right)\Big|_o^t + 0.3 = 10t + 5e^{-2t} - 4.7A$$

At t = ls, i = 10 - 4.7 + 5e^{-2} = **5.977 A**

$$w = \frac{1}{2}L\,i^2 = \mathbf{35.72J}$$

Chapter 6, Solution 42.

$$i = \frac{1}{L}\int_o^t v dt + i(0) = \frac{1}{5}\int_o^t v(t)dt - 1$$

For $0 < t < 1$, $i = \frac{10}{5}\int_0^t dt - 1 = 2t - 1$ A

For $1 < t < 2$, $i = 0 + i(1) = 1A$

For $2 < t < 3$, $i = \frac{1}{5}\int 10dt + i(2) = 2t\Big|_t^2 + 1$

= 2t - 3 A

For $3 < t < 4$, $i = 0 + i(3) = 3$ A

For $4 < t < 5$, $i = \frac{1}{5}\int_4^t 10dt + i(4) = 2t\Big|_4^t + 3$

= 2t - 5 A

Thus, $$i(t) = \begin{bmatrix} 2t - 1A, & 0 < t < 1 \\ 1A, & 1 < t < 2 \\ 2t - 3A, & 2 < t < 3 \\ 3A, & 3 < t < 4 \\ 2t - 5, & 4 < t < 5 \end{bmatrix}$$

Chapter 6, Solution 43.

$$w = L\int_{-\infty}^{t} i\,dt = \frac{1}{2}Li(t) - \frac{1}{2}Li^{2}(-\infty)$$

$$= \frac{1}{2}x80x10^{-3}x\left(60x10^{-3}\right) - 0$$

$= \underline{\textbf{144 μJ}}$

Chapter 6, Solution 44.

$$i = \frac{1}{L}\int_{t_o}^{t} vdt + i\left(t_o\right) = \frac{1}{5}\int_{o}^{t}(4 + 10\cos 2t)dt - 1$$

$= \underline{\textbf{0.8t + sin 2t -1}}$

Chapter 6, Solution 45.

$$i(t) = \frac{1}{L}\int_{o}^{t} v(t) + i(0)$$

For $0 < t < 1$, $v = 5t$

$$i = \frac{1}{10x10^{-3}}\int_{o}^{t} 5t\,dt + 0$$

$= 0.25t^2$ kA

For $1 < t < 2$, $v = -10 + 5t$

$$i = \frac{1}{10x10^{-3}}\int_{1}^{t}(-10 + 5t)dt + i(1)$$

$$= \int_{1}^{t}(0.5t - 1)dt + 0.25kA$$

$= 1 - t + 0.25t^2$ kA

$$\underline{i(t) = \begin{bmatrix} 0.25t^2 kA, & 0 < t < 1 \\ 1 - t + 0.25t^2 kA, & 1 < t < 2 \end{bmatrix}}$$

Chapter 6, Solution 46.

Under dc conditions, the circuit is as shown below:

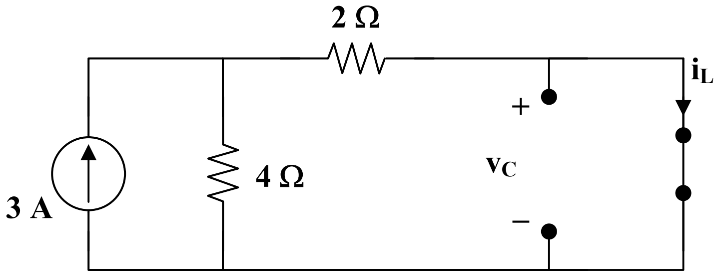

By current division,

$$i_L = \frac{4}{4+2}(3) = \underline{\mathbf{2A}}, \quad v_c = \underline{\mathbf{0V}}$$

$$w_L = \frac{1}{2}L\,i_L^2 = \frac{1}{2}\left(\frac{1}{2}\right)(2)^2 = \underline{\mathbf{1J}}$$

$$w_c = \frac{1}{2}C\,v_c^2 = \frac{1}{2}(2)(v) = \underline{\mathbf{0J}}$$

Chapter 6, Solution 47.

Under dc conditions, the circuit is equivalent to that shown below:

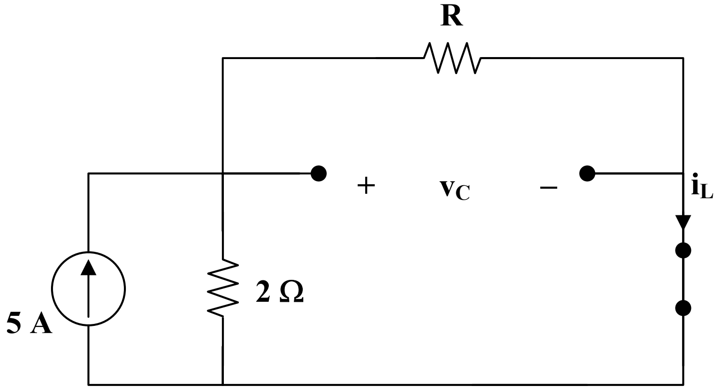

$$i_L = \frac{2}{R+2}(5) = \frac{10}{R+2}, \quad v_c = Ri_L = \frac{10R}{R+2}$$

$$w_c = \frac{1}{2}Cv_c^2 = 80x10^{-6}x\frac{100R^2}{(R+2)^2}$$

$$w_L = \frac{1}{2}Li_1^2 = 2x10^{-3}x\frac{100}{(R+2)^2}$$

If $w_c = w_L$,

$$80x10^{-6}x\frac{100R^2}{(Rx2)^2} = \frac{2x10^{-3}x100}{(R+2)^2} \longrightarrow 80 \text{ x } 10^{-3}R^2 = 2$$

R = **<u>5Ω</u>**

Chapter 6, Solution 48.

Under dc conditions, the circuit is as shown below:

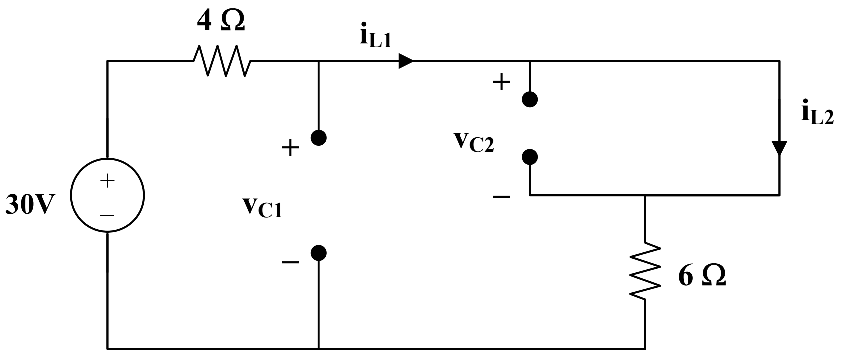

$$i_{L_1} = i_{L_2} = \frac{30}{4+6} = \mathbf{\underline{3A}}$$

$$v_{C_1} = 6i_{L_1} = \mathbf{\underline{18V}}$$

$$v_{C_2} = \mathbf{\underline{0V}}$$

Chapter 6, Solution 49.

(a) $L_{eq} = 5 + 6\|(1 + 4\|4) = 5 + 6\|3 = \underline{\mathbf{7H}}$

(b) $L_{eq} = 12\|(1 + 6\|6) = 12\|4 = \underline{\mathbf{3H}}$

(c) $L_{eq} = 4\|(2 + 3\|6) = 4\|4 = \underline{\mathbf{2H}}$

Chapter 6, Solution 50.

$$L_{eq} = 10 + 5\|(4\|12 + 3\|6)$$

$= 10 + 5\|(3 + 2) = 10 + 2.5 =$ **12.5 mH**

Chapter 6, Solution 51.

$$\frac{1}{L} = \frac{1}{60} + \frac{1}{20} + \frac{1}{30} = \frac{1}{10} \qquad L = 10\text{ mH}$$

$$L_{eq} = 10\|(25 + 10) = \frac{10x35}{45}$$

= **7.778 mH**

Chapter 6, Solution 52.

3//2//6 = 1H, 4//12 = 3H

After the parallel combinations, the circuit becomes that shown below.

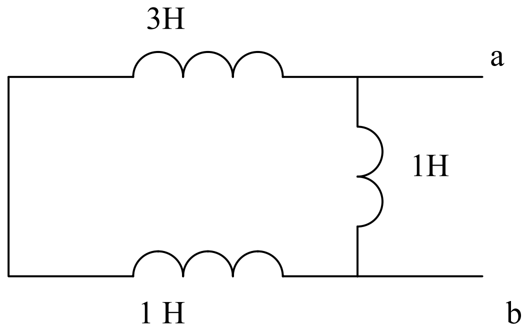

$L_{ab} = (3+1)//1 = (4x1)/5 =$ **0.8 H**

Chapter 6, Solution 53.

$$L_{eq} = 6 + 10 + 8\|\left[5\|(8+12) + 6\|(8+4)\right]$$

$$= 16 + 8\|(4+4) = 16 + 4$$

L_{eq} = **<u>20 mH</u>**

Chapter 6, Solution 54.

$$L_{eq} = 4 + (9+3)\|\left(10\|0 + 6\|12\right)$$

$$= 4 + 12\|(0+4) = 4 + 3$$

L_{eq} = **<u>7H</u>**

Chapter 6, Solution 55.

(a) L//L = 0.5L,   L + L = 2L

$$L_{eq} = L + 2L // 0.5L = L + \frac{2Lx0.5L}{2L + 0.5L} = \underline{1.4L}$$

(b) L//L = 0.5L,   L//L + L//L = L

L_{eq} = L//L = **<u>0.5L</u>**

Chapter 6, Solution 56.

$$L\|L\|L = \frac{1}{\frac{3}{L}} = \frac{L}{3}$$

Hence the given circuit is equivalent to that shown below:

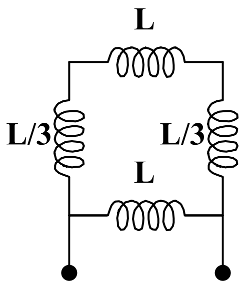

$$L_{eq} = L \left\| \left(L + \frac{2}{3}L \right) = \frac{Lx\frac{5}{3}L}{L + \frac{5}{3}L} = \frac{5}{8}L \right.$$

Chapter 6, Solution 57.

$$\text{Let } v = L_{eq}\frac{di}{dt} \qquad (1)$$

$$v = v_1 + v_2 = 4\frac{di}{dt} + v_2 \qquad (2)$$

$$i = i_1 + i_2 \longrightarrow i_2 = i - i_1 \qquad (3)$$

$$v_2 = 3\frac{di_1}{dt} \text{ or } \frac{di_1}{dt} = \frac{v_2}{3} \qquad (4)$$

and

$$-v_2 + 2\frac{di}{dt} + 5\frac{di_2}{dt} = 0$$

$$v_2 = 2\frac{di}{dt} + 5\frac{di_2}{dt} \qquad (5)$$

Incorporating (3) and (4) into (5),

$$v_2 = 2\frac{di}{dt} + 5\frac{di}{dt} - 5\frac{di_1}{dt} = 7\frac{di}{dt} - 5\frac{v_2}{3}$$

$$v_2\left(1 + \frac{5}{3}\right) = 7\frac{di}{dt}$$

$$v_2 = \frac{35}{8}\frac{di}{dt}$$

Substituting this into (2) gives

$$v = 4\frac{di}{dt} + \frac{35}{8}\frac{di}{dt}$$

$$= \frac{67}{8}\frac{di}{dt}$$

Comparing this with (1),

$$L_{eq} = \frac{67}{8} = \underline{\mathbf{8.375H}}$$

Chapter 6, Solution 58.

$$v = L\frac{di}{dt} = 3\frac{di}{dt} = 3 \text{ x slope of i(t).}$$

Thus v is sketched below:

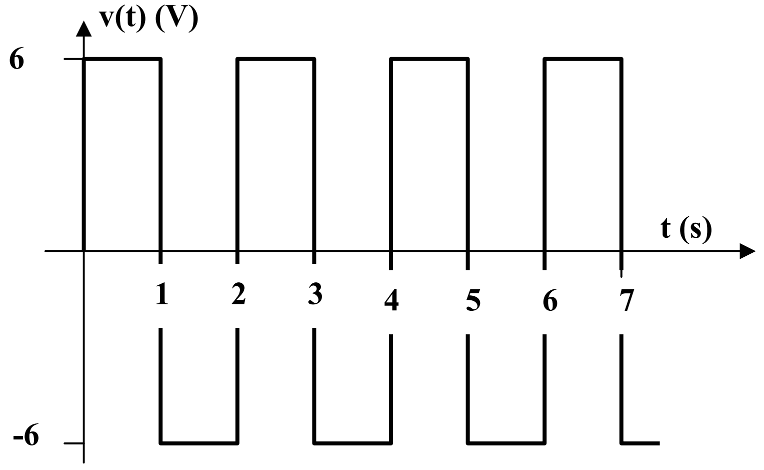

Chapter 6, Solution 59.

(a) $v_s = (L_1 + L_2)\frac{di}{dt}$

$$\frac{di}{dt} = \frac{v_s}{L_1 + L_2}$$

$$v_1 = L_1\frac{di}{dt}, \quad v_2 = L_2\frac{di}{dt}$$

$$\underline{v_1 = \frac{L_1}{L_1 + L_2}v_s, \; v_L = \frac{L_2}{L_1 + L_2}v_s}$$

(b) $v_i = v_2 = L_1\frac{di_1}{dt} = L_2\frac{di_2}{dt}$

$$i_s = i_1 + i_2$$

$$\frac{di_s}{dt} = \frac{di_1}{dt} + \frac{di_2}{dt} = \frac{v}{L_1} + \frac{v}{L_2} = v\frac{(L_1 + L_2)}{L_1L_2}$$

$$i_1 = \frac{1}{L_1}\int vdt = \frac{1}{L_1}\int\frac{L_1L_2}{L_1 + L_2}\frac{di_s}{dt}dt = \underline{\frac{L_2}{L_1 + L_2}i_s}$$

$$i_2 = \frac{1}{L_2}\int v dt = \frac{1}{L_2}\int \frac{L_1 L_2}{L_1 + L_2}\frac{di_s}{dt} dt = \underline{\frac{L_1}{L_1 + L_2} i_s}$$

Chapter 6, Solution 60

$$L_{eq} = 3 // 5 = \frac{15}{8}$$

$$v_o = L_{eq}\frac{di}{dt} = \frac{15}{8}\frac{d}{dt}\left(4e^{-2t}\right) = \underline{-15e^{-2t}}$$

$$i_o = \frac{I}{L}\int_0^t v_o(t)dt + i_o(0) = 2 + \frac{1}{5}\int_0^t (-15)e^{-2t} = 2 + 1.5e^{-2t}\Big|_0^t = \underline{0.5 + 1.5e^{-2t}}\text{ A}$$

Chapter 6, Solution 61.

(a) $i_s = i_1 + i_2$

$i_s(0) = i_1(0) + i_2(0)$

$6 = 4$ ~~$+ i_2(0)$~~ $\qquad i_2(0) =$ **2mA**

(b) Using current division:

$$i_1 = \frac{20}{30 + 20} i_s = 0.4\left(6e^{-2t}\right) = \underline{\mathbf{2.4e^{-2t}\ mA}}$$

$$i_2 = i_s - i_1 = \underline{\mathbf{3.6e^{-2t}\ mA}}$$

(c) $$30\|20 = \frac{30x20}{50} = 12\text{mH}$$

$$v_1 = L\frac{di}{dt} = 10x10^{-3}\frac{d}{dt}\left(6e^{-2t}\right)x10^{-3} = \underline{\mathbf{-120e^{-2t}\ \mu V}}$$

$$v_2 = L\frac{di}{dt} = 12x10^{-3}\frac{d}{dt}\left(6e^{-2t}\right)x10^{-3} = \underline{\mathbf{-144e^{-2t}\ \mu V}}$$

(d) $$w_{10mH} = \frac{1}{2}x30x10^{-3}\left(36e^{-4t}x10^{-6}\right)$$

$$= 0.8e^{-4t}\Big|_{t=\frac{1}{2}}\ \mu J$$

$= \underline{\mathbf{24.36nJ}}$

$$w_{30mH} = \frac{1}{2}x30x10^{-3}\left(5.76e^{-4t}x10^{-6}\right)\Big|_{t=1/2}$$

$= \underline{\mathbf{11.693nJ}}$

$$w_{20mH} = \frac{1}{2}x20x10^{-3}\left(12.96e^{-4t}x10^{-6}\right)\Big|_{t=1/2}$$

$= \underline{\mathbf{17.54\ nJ}}$

Chapter 6, Solution 62.

(a) $L_{eq} = 25 + 20//60 = 25 + \frac{20x60}{80} = 40\text{ mH}$

$$v = L_{eq}\frac{di}{dt} \longrightarrow i = \frac{1}{L_{eq}}\int v(t)dt + i(0) = \frac{10^{-3}}{40x10^{-3}}\int_0^t 12e^{-3t}dt + i(0) = -0.1(e^{-3t} - 1) + i(0)$$

Using current division,

$$i_1 = \frac{60}{80}i = \frac{3}{4}i, \quad i_2 = \frac{1}{4}i$$

$$i_1(0) = \frac{3}{4}i(0) \longrightarrow 0.75i(0) = -0.01 \longrightarrow i(0) = -0.01333$$

$$i_2 = \frac{1}{4}(-0.1e^{-3t} + 0.08667)\text{ A} = \text{-}25e^{-3t} + 21.67\text{ mA}$$

$$i_2(0) = -25 + 21.67 = \underline{-3.33\text{ mA}}$$

(b) $i_1 = \frac{3}{4}(-0.1e^{-3t} + 0.08667)\text{ A} = \underline{\text{-}75e^{-3t} + 65\text{ mA}}$

$i_2 = \underline{\text{-}25e^{-3t} + 21.67\text{ mA}}$

Chapter 6, Solution 63.

We apply superposition principle and let

$$v_o = v_1 + v_2$$

where v_1 and v_2 are due to i_1 and i_2 respectively.

$$v_1 = L\frac{di_1}{dt} = 2\frac{di_1}{dt} = \begin{cases} 2, & 0 < t < 3 \\ -2, & 3 < t < 6 \end{cases}$$

$$v_2 = L\frac{di_2}{dt} = 2\frac{di_2}{dt} = \begin{cases} 4, & 0 < t < 2 \\ 0, & 2 < t < 4 \\ -4, & 4 < t < 6 \end{cases}$$

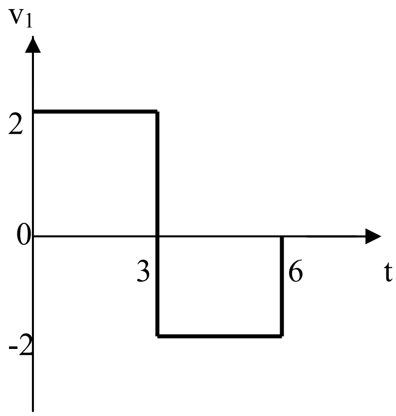

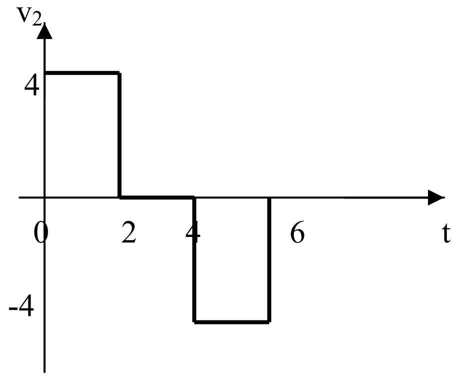

Adding v_1 and v_2 gives v_o, which is shown below.

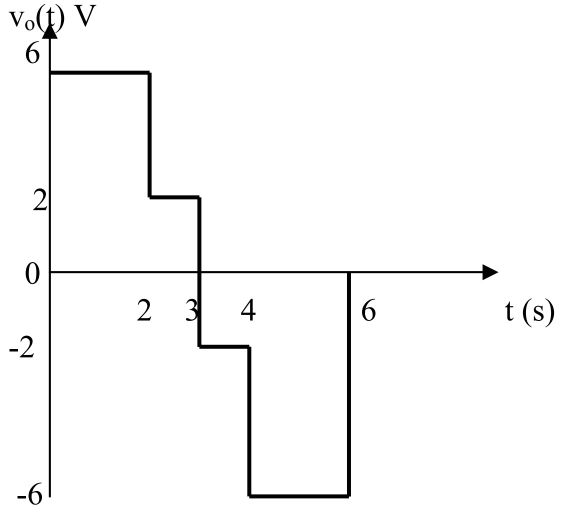

Chapter 6, Solution 64.

(a) When the switch is in position A,
i=-6 =i(0)
When the switch is in position B,
$i(\infty) = 12/4 = 3, \qquad \tau = L/R = 1/8$

$$i(t) = i(\infty) + [i(0) - i(\infty)]e^{-t/t} = \underline{3 - 9e^{-8t} \text{ A}}$$

(b) -12 + 4i(0) + v=0, i.e. v=12 – 4i(0) = <u>36 V</u>

(c) At steady state, the inductor becomes a short circuit so that
<u>v= 0 V</u>

Chapter 6, Solution 65.

(a) $w_5 = \frac{1}{2}L_1 i_1^2 = \frac{1}{2}x5x(4)^2 = \underline{\mathbf{40\ W}}$

$w_{20} = \frac{1}{2}(20)(-2)^2 = \underline{\mathbf{40\ W}}$

(b) $w = w_5 + w_{20} = \underline{\mathbf{80\ W}}$

(c) $i_1 = L_1 \frac{dv}{dt} = 5(-200)\left(50e^{-200t}x10^{-3}\right)$

$= \underline{\mathbf{-50e^{-200t}A}}$

$i_2 = L_2 \frac{dv}{dt} = 20(-200)\left(50e^{-200t}x10^{-3}\right)$

$= \underline{\mathbf{-200e^{-200t}A}}$

$i_2 = L_2 \frac{dv}{dt} = 20(-200)\left(50e^{-200t}x10^{-3}\right)$

$= \underline{\mathbf{-200e^{-200t}\ A}}$

(d) $i = i_1 + i_2 = \underline{\mathbf{-250e^{-200t}\ A}}$

Chapter 6, Solution 66.

$L_{eq} = 20 + 16 + 60\|40 = 36 + 24 = 60mH$

$v = L\frac{di}{dt}$

$i = \frac{1}{L}\int_o^t vdt + i(0)$

$= \frac{1}{60x10^{-3}}\int_o^t 12\sin 4t\, dt + 0\ mA$

$i = -50\cos 4t\Big|_o^t = \underline{\mathbf{50(1 - cos\ 4t)\ mA}}$

$60\|40 = 24mH$

$v = L\frac{di}{dt} = 24x10^{-3}\frac{d}{dt}(50)(1-\cos 4t)mV$

$= \underline{\mathbf{4.8\ sin\ 4t\ mV}}$

Chapter 6, Solution 67.

$$v_o = -\frac{1}{RC}\int vi\,dt, \text{ RC} = 50 \text{ x } 10^3 \text{ x } 0.04 \text{ x } 10^{-6} = 2 \text{ x } 10^{-3}$$

$$v_o = \frac{-10^3}{2}\int 10\sin 50t\, dt$$

v_o = **100 cos 50t mV**

Chapter 6, Solution 68.

$$v_o = -\frac{1}{RC}\int vi\,dt + v(0), \text{ RC} = 50 \text{ x } 10^3 \text{ x } 100 \text{ x } 10^{-6} = 5$$

$$v_o = -\frac{1}{5}\int_o^t 10dt + 0 = -2t$$

The op amp will saturate at $v_o = \pm 12$

-12 = -2t ⟶ **t = 6s**

Chapter 6, Solution 69.

RC = 4 x 10^6 x 1 x 10^{-6} = 4

$$v_o = -\frac{1}{RC}\int v_i dt = -\frac{1}{4}\int v_i dt$$

For 0 < t < 1, v_i = 20, $v_o = -\frac{1}{4}\int_o^t 20dt = \text{-5t mV}$

For 1 < t < 2, v_i = 10, $v_o = -\frac{1}{4}\int_1^t 10dt + v(1) = -2.5(t-1) - 5$

= -2.5t - 2.5mV

For 2 < t < 4, v_i = - 20, $v_o = +\frac{1}{4}\int_2^t 20dt + v(2) = 5(t-2) - 7.5$

= 5t - 17.5 mV

For 4 < t < 5m, v_i = -10, $v_o = \frac{1}{4}\int_4^t 10dt + v(4) = 2.5(t-4) + 2.5$

= 2.5t - 7.5 mV

For 5 < t < 6, v_i = 20, $v_o = -\frac{1}{4}\int_5^t 20dt + v(5) = -5(t-5) + 5$

= - 5t + 30 mV

Thus $v_o(t)$ is as shown below:

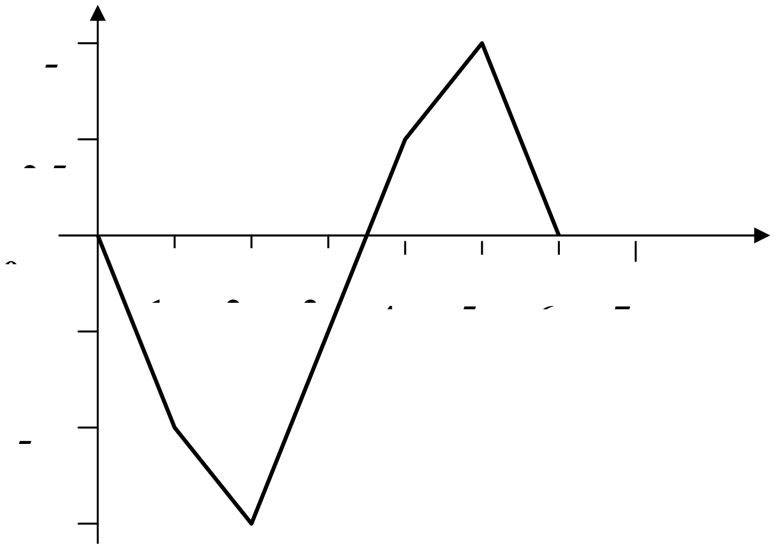

Chapter 6, Solution 70.

One possibility is as follows:

$$\frac{1}{RC} = 50$$

Let R = 100 kΩ, $C = \frac{1}{50x100x10^3} = 0.2\mu F$

Chapter 6, Solution 71.

By combining a summer with an integrator, we have the circuit below:

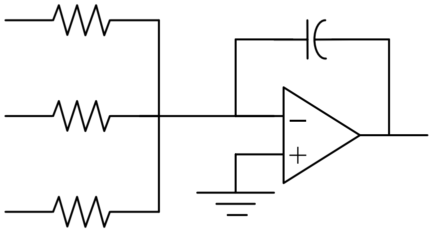

$$v_o = -\frac{1}{R_1C}\int v_1 dt - \frac{1}{R_2C}\int v_2 dt - \frac{1}{R_2C}\int v_2 dt$$

For the given problem, C = 2μF,

$R_1C = 1 \longrightarrow R_1 = 1/(C) = 100^6/(2) =$ **<u>500 kΩ</u>**

$R_2C = 1/(4) \longrightarrow R_2 = 1/(4C) = 500k\Omega/(4) =$ **<u>125 kΩ</u>**

$R_3C = 1/(10) \longrightarrow R_3 = 1/(10C) =$ **<u>50 kΩ</u>**

Chapter 6, Solution 72.

The output of the first op amp is

$$v_1 = -\frac{1}{RC}\int v_i \, dt = -\frac{1}{10x10^3 x2x10^{-6}}\int_o^t idt = -\frac{100t}{2}$$

$$= - 50t$$

$$v_o = -\frac{1}{RC}\int v_i \, dt = -\frac{1}{20x10^3 x0.5x10^{-6}}\int_o^t (-50t)dt$$

$$= 2500t^2$$

At t = 1.5ms,

$$v_o = 2500(1.5)^2 x10^{-6} = \underline{\textbf{5.625 mV}}$$

Chapter 6, Solution 73.

Consider the op amp as shown below:

Let $v_a = v_b = v$

At node a, $\frac{0-v}{R} = \frac{v-v_o}{R} \longrightarrow 2v - v_o = 0$ (1)

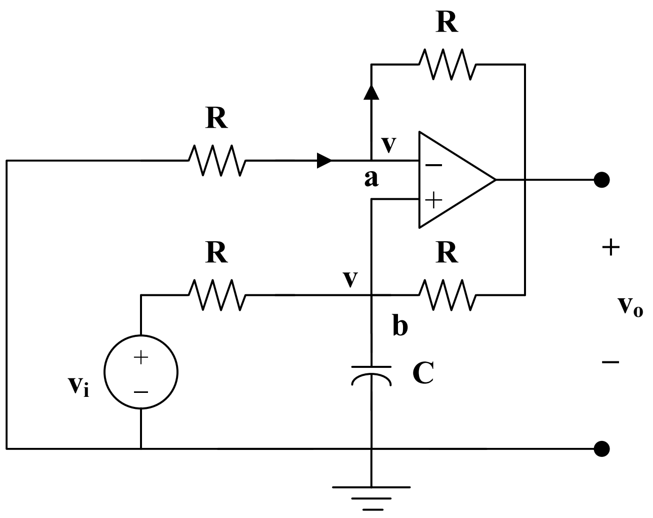

At node b, $\frac{v_i - v}{R} = \frac{v - v_o}{R} + C\frac{dv}{dt}$

$$v_i = 2v - v_o + RC\frac{dv}{dt} \qquad (2)$$

Combining (1) and (2),

$$v_i = v_o - v_o + \frac{RC}{2}\frac{dv_o}{dt}$$

or

$$v_o = \frac{2}{RC}\int v_i \, dt$$

showing that the circuit is a noninverting integrator.

Chapter 6, Solution 74.

RC = 0.01 x 20 x 10^{-3} sec

$$v_o = -RC\frac{dv_i}{dt} = -0.2\frac{dv}{dt} \text{ m sec}$$

$$v_o = \begin{cases} -2V, & 0 < t < 1 \\ 2V, & 1 < t < 3 \\ -2V, & 3 < t < 4 \end{cases}$$

Thus $v_o(t)$ is as sketched below:

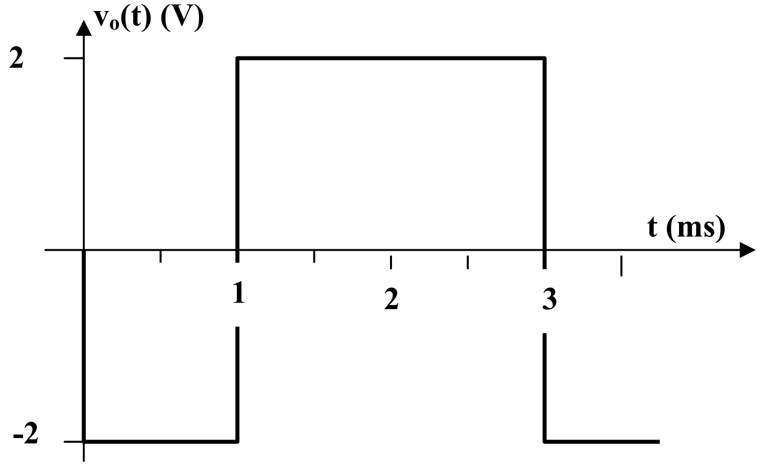

Chapter 6, Solution 75.

$$v_0 = -RC\frac{dv_i}{dt}, \quad RC = 250x10^3 x10x10^{-6} = 2.5$$

$$v_o = -2.5\frac{d}{dt}(12t) = \underline{\text{-30 mV}}$$

Chapter 6, Solution 76.

$$v_o = -RC\frac{dv_i}{dt}, \text{ RC} = 50 \text{ x } 10^3 \text{ x } 10 \text{ x } 10^{-6} = 0.5$$

$$v_o = 0.5\frac{dv_i}{dt} = \begin{bmatrix} -10, & 0 < t < 5 \\ 5, & 5 < t < 5 \end{bmatrix}$$

The input is sketched in Fig. (a), while the output is sketched in Fig. (b).

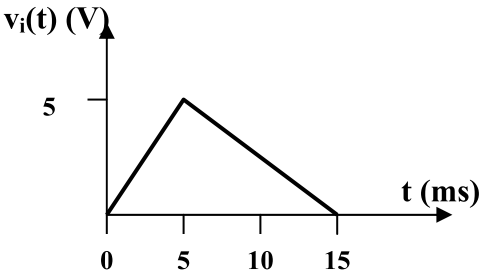

(a)

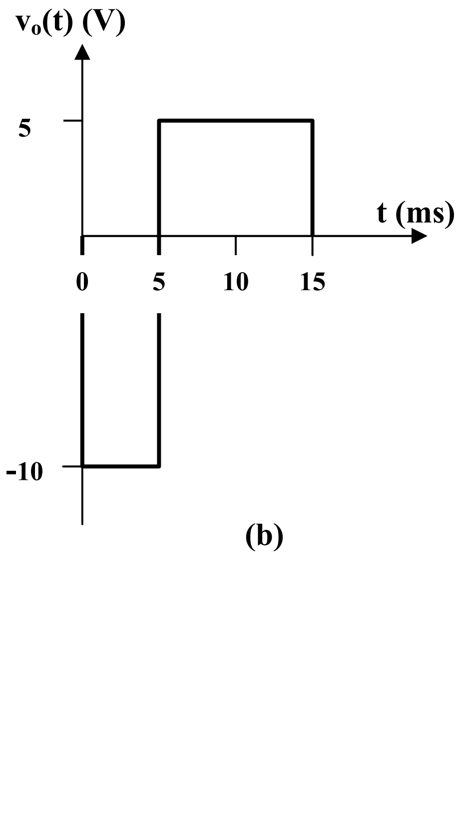

(b)

Chapter 6, Solution 77.

$i = i_R + i_C$

$$\frac{v_i - 0}{R} = \frac{0 - v_0}{R_F} + C\frac{d}{dt}(0 - v_o)$$

$$R_F C = 10^6 x10^{-6} = 1$$

Hence $v_i = -\left(v_o + \frac{dv_o}{dt} \right)$

Thus v_i is obtained from v_o as shown below:

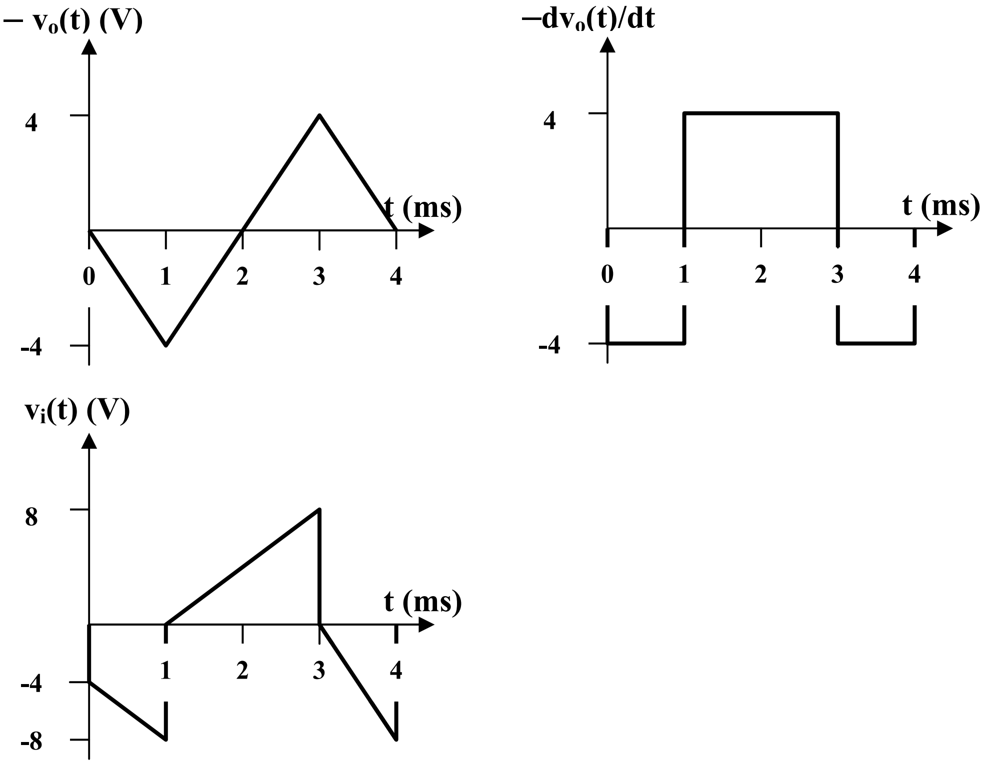

Chapter 6, Solution 78.

$$\frac{d^2 v_o}{dt} = 10 \sin 2t - \frac{2dv_o}{dt} - v_o$$

Thus, by combining integrators with a summer, we obtain the appropriate analog computer as shown below:

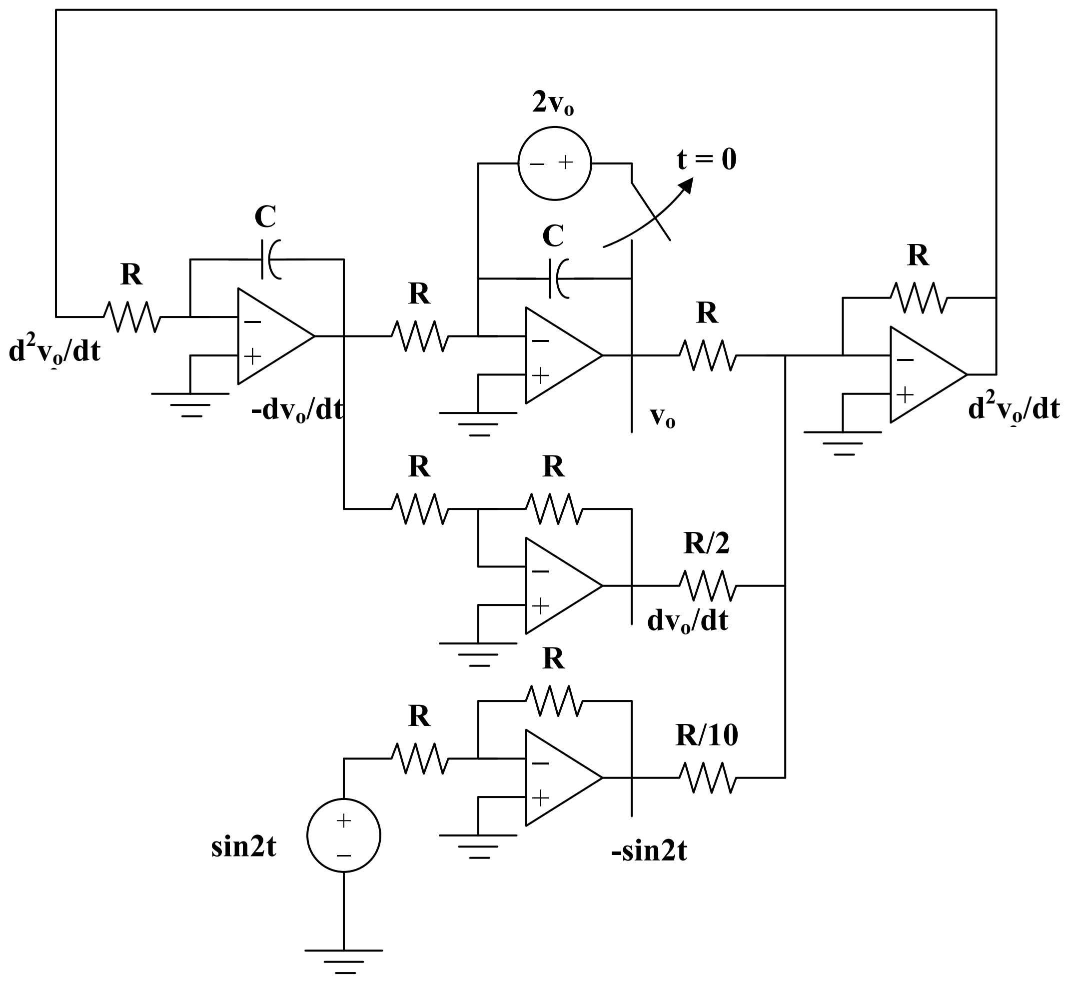

Chapter 6, Solution 79.

We can write the equation as

$$\frac{dy}{dt} = f(t) - 4y(t)$$

which is implemented by the circuit below.

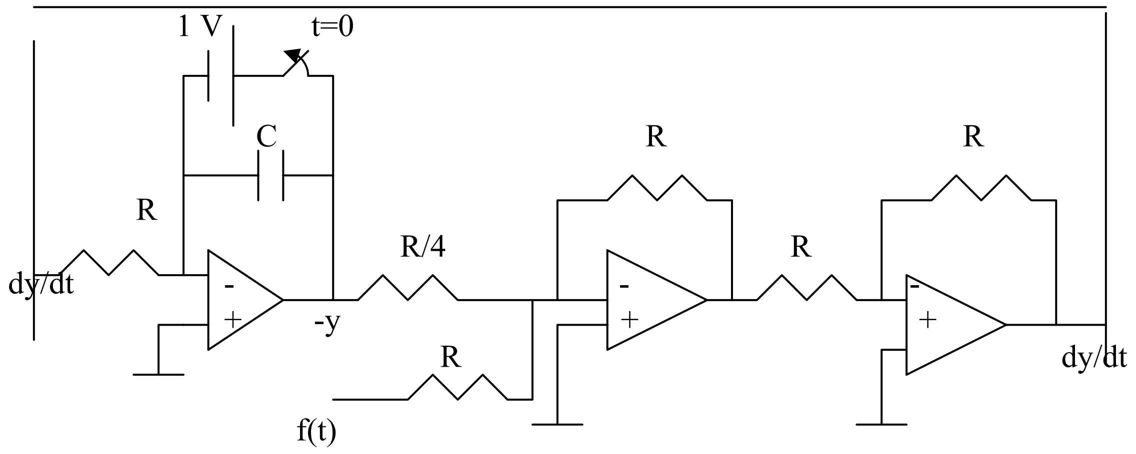

Chapter 6, Solution 80.

From the given circuit,

$$\frac{d^2 v_o}{dt^2} = f(t) - \frac{1000k\Omega}{5000k\Omega} v_o - \frac{1000k\Omega}{200k\Omega}\frac{dv_o}{dt}$$

or

$$\underline{\frac{d^2 v_o}{dt^2} + 5\frac{dv_o}{dt} + 2v_o = f(t)}$$

Chapter 6, Solution 81

We can write the equation as

$$\frac{d^2 v}{dt^2} = -5v - 2f(t)$$

which is implemented by the circuit below.

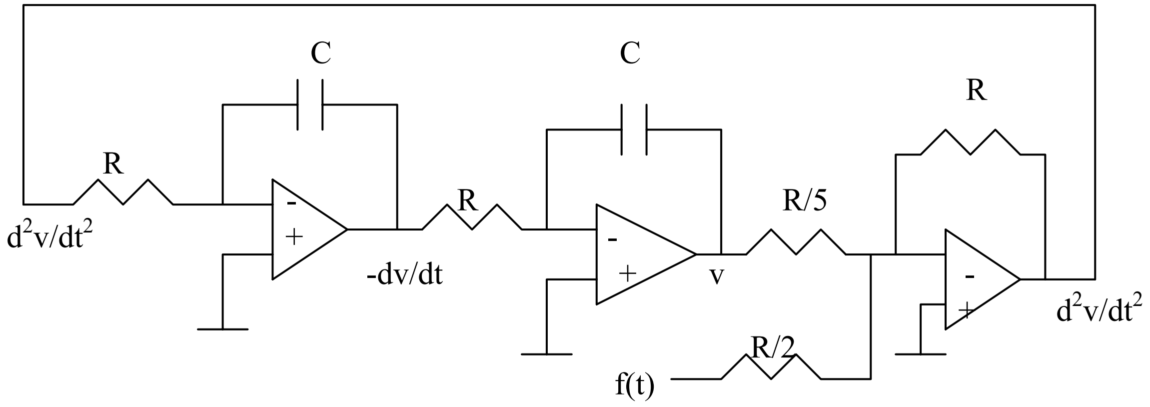

Chapter 6, Solution 82

The circuit consists of a summer, an inverter, and an integrator. Such circuit is shown below.

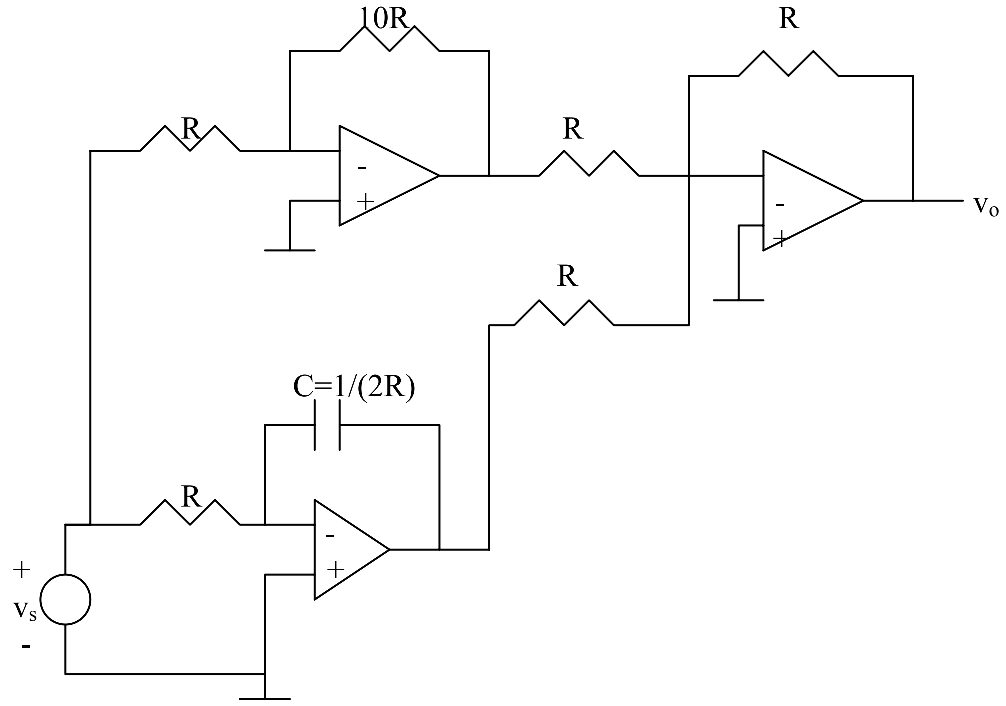

Chapter 6, Solution 83.

Since two 10μF capacitors in series gives 5μF, rated at 600V, it requires 8 groups in parallel with each group consisting of two capacitors in series, as shown below:

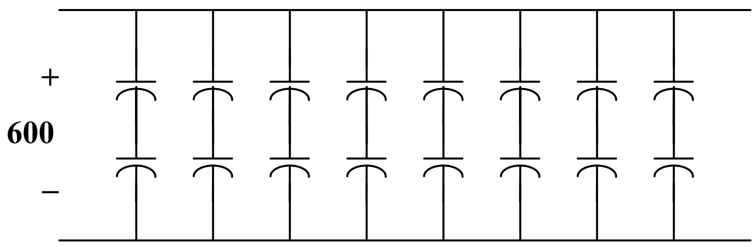

Answer: **8 groups in parallel with each group made up of 2 capacitors in series.**

Chapter 6, Solution 84.

$$\Delta I = \frac{\Delta q}{\Delta t} \qquad \Delta I \text{ x } \Delta t = \Delta q$$

$$\Delta q = 0.6 \text{ x } 4 \text{ x } 10^{-6}$$
$$= 2.4\mu C$$

$$C = \frac{\Delta q}{\Delta v} = \frac{2.4x10^{-6}}{(36-20)} = \underline{150nF}$$

Chapter 6, Solution 85.

It is evident that differentiating i will give a waveform similar to v. Hence,

$$v = L\frac{di}{dt}$$

$$i = \begin{cases} 4t, 0 < t < 1 \\ 8 - 4t, 1 < t < 2 \end{cases}$$

$$v = L\frac{di}{dt} = \begin{cases} 4L, 0 < t < 1 \\ -4L, 1 < t < 2 \end{cases}$$

But,
$$v = \begin{cases} 5mV, 0 < t < 1 \\ -5mV, 1 < t < 2 \end{cases}$$

Thus, $4L = 5 \text{ x } 10^{-3} \longrightarrow L = 1.25$ mH in a **<u>1.25 mH inductor</u>**

Chapter 6, Solution 86.

(a) For the series-connected capacitor

$$C_s = \frac{1}{\frac{1}{C} + \frac{1}{C} + \ldots + \frac{1}{C}} = \frac{C}{8}$$

For the parallel-connected strings,

$$C_{eq} = 10C_s = \frac{10C_s}{8} = 10x\frac{1000}{3}\mu F = \underline{\mathbf{1250\mu F}}$$

(b) $v_T = 8 \text{ x } 100\text{V} = 800\text{V}$

$$w = \frac{1}{2} C_{eq} v_T^2 = \frac{1}{2}\left(1250\text{x}10^{-6}\right)(800)^2$$

$= \underline{\mathbf{400J}}$

Chapter 7, Solution 1.

Applying KVL to Fig. 7.1.

$$\frac{1}{C}\int_{-\infty}^{t} i\,dt + Ri = 0$$

Taking the derivative of each term,

$$\frac{i}{C} + R\frac{di}{dt} = 0$$

or $$\frac{di}{i} = -\frac{dt}{RC}$$

Integrating,

$$\ln\left(\frac{i(t)}{I_0}\right) = \frac{-t}{RC}$$

$$i(t) = I_0 e^{-t/RC}$$

$$v(t) = Ri(t) = RI_0 e^{-t/RC}$$

or $$\underline{\mathbf{v(t) = V_0 e^{-t/RC}}}$$

Chapter 7, Solution 2.

$$\tau = R_{th}C$$

where R_{th} is the Thevenin equivalent at the capacitor terminals.

$$R_{th} = 120 \,||\, 80 + 12 = 60\ \Omega$$

$$\tau = 60 \times 0.5 \times 10^{-3} = \underline{\mathbf{30\ ms}}$$

Chapter 7, Solution 3.

(a) $R_{Th} = 10//10 = 5k\Omega, \quad \tau = R_{Th}C = 5x10^3 x2x10^{-6} = \underline{10\,\text{ms}}$

(b) $R_{Th} = 20//(5+25)+8 = 20\Omega, \quad \tau = R_{Th}C = 20x0.3 = \underline{6\text{s}}$

Chapter 7, Solution 4.

$$\tau = R_{eq}C_{eq}$$

where $C_{eq} = \dfrac{C_1C_2}{C_1+C_2}$, $\quad R_{eq} = \dfrac{R_1R_2}{R_1+R_2}$

$$\tau = \underline{\mathbf{\frac{R_1R_2C_1C_2}{(R_1+R_2)(C_1+C_2)}}}$$

Chapter 7, Solution 5.

$$v(t) = v(4)\,e^{-(t-4)/\tau}$$
where $v(4) = 24$, $\tau = RC = (20)(0.1) = 2$

$$v(t) = 24\,e^{-(t-4)/2}$$
$$v(10) = 24\,e^{-6/2} = \underline{\mathbf{1.195\ V}}$$

Chapter 7, Solution 6.

$$v_o = v(0) = \frac{2}{10+2}(24) = 4\text{V}$$
$$v(t) = v_o e^{-t/\tau},\ \tau = RC = 40\text{x}10^{-6}\text{x}2\text{x}10^{3} = \frac{2}{25}$$
$$v(t) = \underline{4e^{-12.5t}\text{V}}$$

Chapter 7, Solution 7.

$$v(t) = v(0)\,e^{-t/\tau}, \qquad \tau = R_{th}C$$
where R_{th} is the Thevenin resistance across the capacitor. To determine R_{th}, we insert a 1-V voltage source in place of the capacitor as shown below.

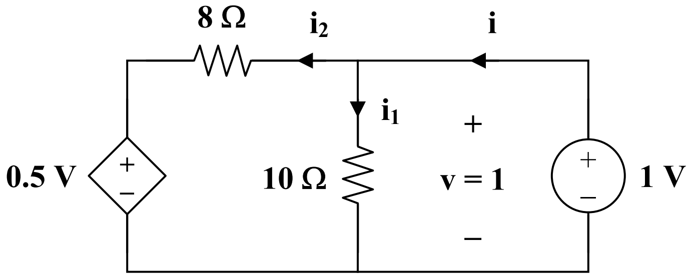

$$i_1 = \frac{1}{10} = 0.1, \qquad i_2 = \frac{1-0.5}{8} = \frac{1}{16}$$
$$i = i_1 + i_2 = 0.1 + \frac{1}{16} = \frac{13}{80}$$
$$R_{th} = \frac{1}{i} = \frac{80}{13}$$
$$\tau = R_{th}C = \frac{80}{13}\times 0.1 = \frac{8}{13}$$
$$v(t) = \underline{20\,e^{-13t/8}\ \text{V}}$$

Chapter 7, Solution 8.

(a) $\tau = RC = \frac{1}{4}$

$-i = C\frac{dv}{dt}$

$-0.2e^{-4t} = C(10)(-4)e^{-4t} \longrightarrow C = \underline{\mathbf{5\,mF}}$

$R = \frac{1}{4C} = \underline{\mathbf{50\,\Omega}}$

(b) $\tau = RC = \frac{1}{4} = \underline{\mathbf{0.25\,s}}$

(c) $w_C(0) = \frac{1}{2}CV_0^2 = \frac{1}{2}(5\times10^{-3})(100) = \underline{\mathbf{250\,mJ}}$

(d) $w_R = \frac{1}{2}\times\frac{1}{2}CV_0^2 = \frac{1}{2}CV_0^2\left(1 - e^{-2t_0/\tau}\right)$

$0.5 = 1 - e^{-8t_0} \longrightarrow e^{-8t_0} = \frac{1}{2}$

or $e^{8t_0} = 2$

$t_0 = \frac{1}{8}\ln(2) = \underline{\mathbf{86.6\,ms}}$

Chapter 7, Solution 9.

$v(t) = v(0)e^{-t/\tau}, \qquad \tau = R_{eq}C$

$R_{eq} = 2 + 8\,||\,8 + 6\,||\,3 = 2 + 4 + 2 = 8\,\Omega$

$\tau = R_{eq}C = (0.25)(8) = 2$

$v(t) = \underline{\mathbf{20\,e^{-t/2}\ V}}$

Chapter 7, Solution 10.

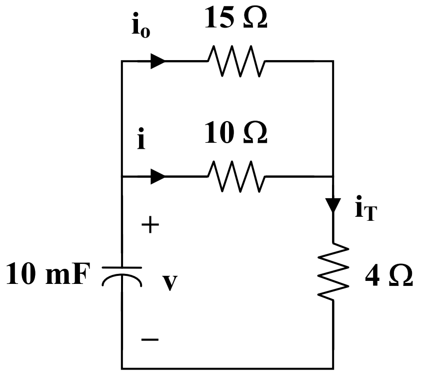

$$15 i_o = 10 i \longrightarrow i_o = \frac{(10)(3)}{15} = 2\ \text{A}$$

i.e. if $i(0) = 3$ A, then $i_o(0) = 2$ A

$i_T(0) = i(0) + i_o(0) = 5$ A

$v(0) = 10i(0) + 4i_T(0) = 30 + 20 = 50$ V

across the capacitor terminals.

$$R_{th} = 4 + 10 \,||\, 15 = 4 + 6 = 10\,\Omega$$

$$\tau = R_{th} C = (10)(10 \times 10^{-3}) = 0.1$$

$$v(t) = v(0)\, e^{-t/\tau} = 50\, e^{-10t}$$

$$i_C = C\frac{dv}{dt} = (10 \times 10^{-3})(-500\, e^{-10t})$$

$$i_C = -5\, e^{-10t}\ \text{A}$$

By applying the current division principle,

$$i(t) = \frac{15}{10+15}(-i_C) = -0.6 i_C = \underline{\mathbf{3\, e^{-10t}\ A}}$$

Chapter 7, Solution 11.

Applying KCL to the RL circuit,

$$\frac{1}{L}\int v\, dt + \frac{v}{R} = 0$$

Differentiating both sides,

$$\frac{v}{L} + \frac{1}{R}\frac{dv}{dt} = 0 \longrightarrow \frac{dv}{dt} + \frac{R}{L} v = 0$$

$$v = A\, e^{-Rt/L}$$

If the initial current is I_0, then

$$v(0) = I_0 R = A$$

$$v = I_0 R\, e^{-t/\tau}, \qquad \tau = \frac{L}{R}$$

$$i = \frac{1}{L}\int_{-\infty}^{t} v(t)\, dt$$

$$i = \frac{-\tau I_0 R}{L} e^{-t/\tau}\Big|_{-\infty}^{t}$$

$$i = -I_0 R\, e^{-t/\tau}$$

$$\underline{\mathbf{i(t) = I_0\, e^{-t/\tau}}}$$

Chapter 7, Solution 12.

When t < 0, the switch is closed and the inductor acts like a short circuit to dc. The 4 Ω resistor is short-circuited so that the resulting circuit is as shown in Fig. (a).

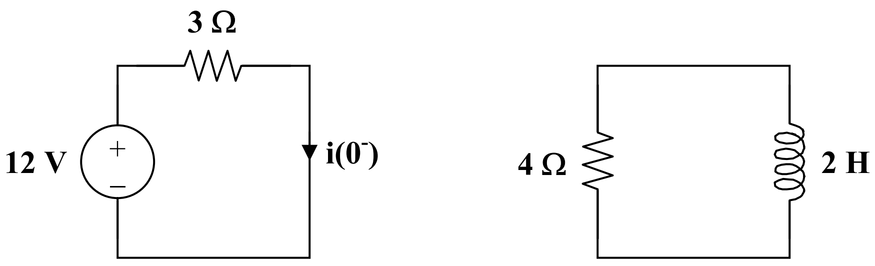

(a) (b)

$$i(0^-) = \frac{12}{3} = 4\text{ A}$$

Since the current through an inductor cannot change abruptly,

$$i(0) = i(0^-) = i(0^+) = 4\text{ A}$$

When t > 0, the voltage source is cut off and we have the RL circuit in Fig. (b).

$$\tau = \frac{L}{R} = \frac{2}{4} = 0.5$$

Hence,

$$i(t) = i(0)\, e^{-t/\tau} = \underline{\mathbf{4\, e^{-2t}\ A}}$$

Chapter 7, Solution 13.

$$\tau = \frac{L}{R_{th}}$$

where R_{th} is the Thevenin resistance at the terminals of the inductor.

$$R_{th} = 70 \parallel 30 + 80 \parallel 20 = 21 + 16 = 37\ \Omega$$

$$\tau = \frac{2 \times 10^{-3}}{37} = \underline{\mathbf{81.08\ \mu s}}$$

Chapter 7, Solution 14

Converting the wye-subnetwork to delta gives

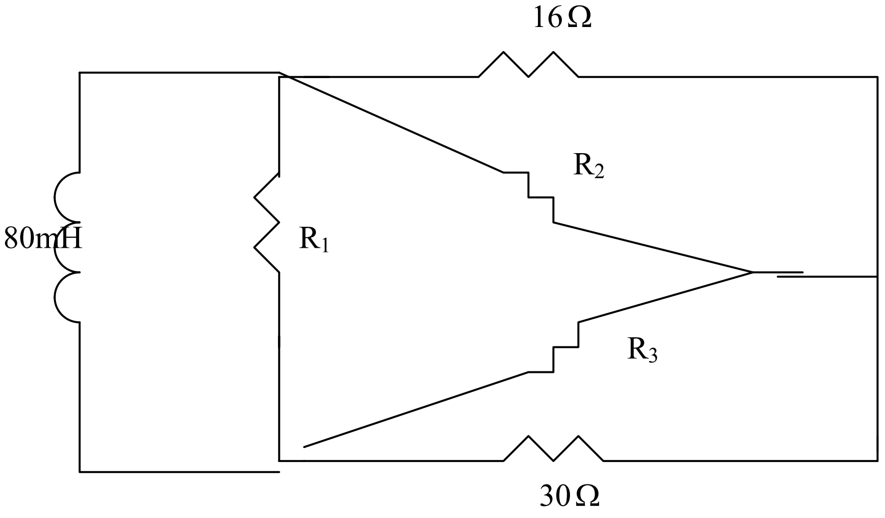

$$R_1 = \frac{10x20 + 20x50 + 50x10}{20} = 1700/20 = 85\Omega, \quad R_2 = \frac{1700}{50} = 34\Omega, \quad R_3 = \frac{1700}{10} = 170\Omega$$

30//170 = (30x170)/200 = 25.5 Ω, 34//16=(34x16)/50 =10.88 Ω

$$R_{Th} = 85//(25.5 + 10.88) = \frac{85x36.38}{121.38} = 25.476\Omega, \quad \tau = \frac{L}{R_{Th}} = \frac{80x10^{-3}}{25.476} = \underline{3.14\ ms}$$

Chapter 7, Solution 15

(a) $R_{Th} = 12 + 10 // 40 = 20\Omega, \qquad \tau = \frac{L}{R_{Th}} = 5/20 = \underline{0.25s}$

(b) $R_{Th} = 40 // 160 + 8 = 40\Omega, \qquad \tau = \frac{L}{R_{Th}} = (20x10^{-3})/40 = \underline{0.5\text{ ms}}$

Chapter 7, Solution 16.

$$\tau = \frac{L_{eq}}{R_{eq}}$$

(a) $\quad L_{eq} = L$ and $R_{eq} = R_2 + \frac{R_1R_3}{R_1 + R_3} = \frac{R_2(R_1 + R_3) + R_1R_3}{R_1 + R_3}$

$$\tau = \underline{\frac{\mathbf{L(R_1 + R_3)}}{\mathbf{R_2(R_1 + R_3) + R_1R_3}}}$$

(b) $\quad$ where $L_{eq} = \frac{L_1L_2}{L_1 + L_2}$ and $R_{eq} = R_3 + \frac{R_1R_2}{R_1 + R_2} = \frac{R_3(R_1 + R_2) + R_1R_2}{R_1 + R_2}$

$$\tau = \underline{\frac{\mathbf{L_1L_2(R_1 + R_2)}}{\mathbf{(L_1 + L_2)(R_3(R_1 + R_2) + R_1R_2)}}}$$

Chapter 7, Solution 17.

$$i(t) = i(0)\,e^{-t/\tau}, \qquad \tau = \frac{L}{R_{eq}} = \frac{1/4}{4} = \frac{1}{16}$$

$$i(t) = 2\,e^{-16t}$$

$$v_o(t) = 3i + L\frac{di}{dt} = 6\,e^{-16t} + (1/4)(-16)\,2\,e^{-16t}$$

$$v_o(t) = \underline{\mathbf{-\,2\,e^{-16t}\ V}}$$

Chapter 7, Solution 18.

If $v(t) = 0$, the circuit can be redrawn as shown below.

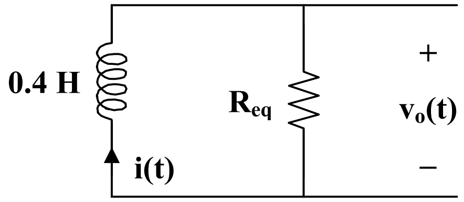

$$R_{eq} = 2 \,||\, 3 = \frac{6}{5}, \qquad \tau = \frac{L}{R} = \frac{2}{5} \times \frac{5}{6} = \frac{1}{3}$$

$$i(t) = i(0)\, e^{-t/\tau} = e^{-3t}$$

$$v_o(t) = -L\frac{di}{dt} = \frac{-2}{5}(-3)\,e^{-3t} = \underline{\mathbf{1.2\,e^{-3t}\ V}}$$

Chapter 7, Solution 19.

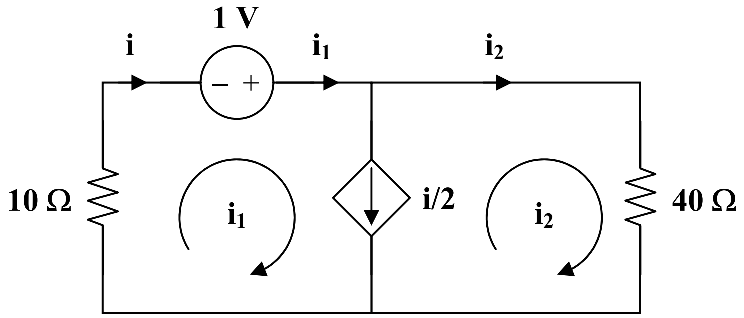

To find R_{th} we replace the inductor by a 1-V voltage source as shown above.

$$10 i_1 - 1 + 40 i_2 = 0$$

But $\quad i = i_2 + i/2 \quad$ and $\quad i = i_1$

i.e. $\quad i_1 = 2 i_2 = 2 i$

$$10 i - 1 + 20 i = 0 \longrightarrow i = \frac{1}{30}$$

$$R_{th} = \frac{1}{i} = 30\ \Omega$$

$$\tau = \frac{L}{R_{th}} = \frac{6}{30} = 0.2\ \text{s}$$

$$i(t) = \underline{\mathbf{2\,e^{-5t}\ A}}$$

Chapter 7, Solution 20.

(a). $\tau = \frac{L}{R} = \frac{1}{50} \longrightarrow R = 50L$

$-v = L\frac{di}{dt}$

$-150e^{-50t} = L(30)(-50)e^{-50t} \longrightarrow L = \underline{\mathbf{0.1\ H}}$

$R = 50L = \underline{\mathbf{5\,\Omega}}$

(b). $\tau = \frac{L}{R} = \frac{1}{50} = \underline{\mathbf{20\ ms}}$

(c). $w = \frac{1}{2}L\,i^2(0) = \frac{1}{2}(0.1)(30)^2 = \underline{\mathbf{45\ J}}$

(d). Let p be the fraction

$\frac{1}{2}L\,I_0 \cdot p = \frac{1}{2}L\,I_0\left(1 - e^{-2t_0/\tau}\right)$

$p = 1 - e^{-(2)(10)/50} = 1 - e^{-0.4} = 0.3296$

i.e. $p = \underline{\mathbf{33\%}}$

Chapter 7, Solution 21.

The circuit can be replaced by its Thevenin equivalent shown below.

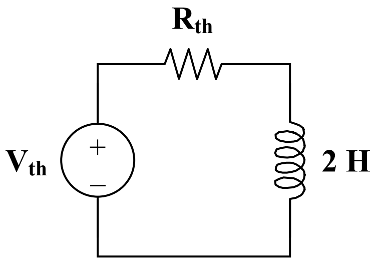

$V_{th} = \frac{80}{80+40}(60) = 40\ V$

$R_{th} = 40 \parallel 80 + R = \frac{80}{3} + R$

$I = i(0) = i(\infty) = \frac{V_{th}}{R_{th}} = \frac{40}{80/3 + R}$

$w = \frac{1}{2}L I^2 = \frac{1}{2}(2)\left(\frac{40}{R + 80/3}\right)^2 = 1$

$\frac{40}{R + 80/3} = 1 \longrightarrow R = \frac{40}{3}$

$R = \underline{\mathbf{13.33\,\Omega}}$

Chapter 7, Solution 22.

$$i(t) = i(0)\,e^{-t/\tau}, \qquad \tau = \frac{L}{R_{eq}}$$

$$R_{eq} = 5 \,||\, 20 + 1 = 5\,\Omega, \qquad \tau = \frac{2}{5}$$

$$i(t) = \underline{\mathbf{10\,e^{-2.5t}\ A}}$$

Using current division, the current through the 20 ohm resistor is

$$i_o = \frac{5}{5+20}(\text{-}i) = \frac{-i}{5} = -2\,e^{-2.5t}$$

$$v(t) = 20\,i_o = \underline{\mathbf{-40\,e^{-2.5t}\ V}}$$

Chapter 7, Solution 23.

Since the 2 Ω resistor, 1/3 H inductor, and the (3+1) Ω resistor are in parallel, they always have the same voltage.

$$-i = \frac{2}{2} + \frac{2}{3+1} = 1.5 \longrightarrow i(0) = -1.5$$

The Thevenin resistance R_{th} at the inductor's terminals is

$$R_{th} = 2 \,||\, (3+1) = \frac{4}{3}, \qquad \tau = \frac{L}{R_{th}} = \frac{1/3}{4/3} = \frac{1}{4}$$

$$i(t) = i(0)\,e^{-t/\tau} = -1.5\,e^{-4t}, \quad t > 0$$

$$v_L = v_o = L\frac{di}{dt} = -1.5(-4)(1/3)\,e^{-4t}$$

$$v_o = \underline{\mathbf{2\,e^{-4t}\ V, \quad t > 0}}$$

$$v_x = \frac{1}{3+1}v_L = \underline{\mathbf{0.5\,e^{-4t}\ V, \quad t > 0}}$$

Chapter 7, Solution 24.

(a) $v(t) = \underline{\mathbf{-5\,u(t)}}$

(b) $i(t) = -10\left[u(t) - u(t-3)\right] + 10\left[u(t-3) - u(t-5)\right]$

$$= \underline{\mathbf{-10\,u(t) + 20\,u(t-3) - 10\,u(t-5)}}$$

(c) $x(t) = (t-1)\left[u(t-1) - u(t-2)\right] + \left[u(t-2) - u(t-3)\right]$
$+ (4-t)\left[u(t-3) - u(t-4)\right]$
$= (t-1)u(t-1) - (t-2)u(t-2) - (t-3)u(t-3) + (t-4)u(t-4)$
$= \underline{\mathbf{r(t-1) - r(t-2) - r(t-3) + r(t-4)}}$

(d) $y(t) = 2u(\text{-}t) - 5\left[u(t) - u(t-1)\right]$
$= \underline{\mathbf{2u(\text{-}t) - 5u(t) + 5u(t-1)}}$

Chapter 7, Solution 25.

$\underline{v(t) = [u(t) + r(t-1) - r(t-2) - 2u(t-2)]\ V}$

Chapter 7, Solution 26.

(a) $v_1(t) = u(t+1) - u(t) + \left[u(t-1) - u(t)\right]$
$v_1(t) = \underline{\mathbf{u(t+1) - 2u(t) + u(t-1)}}$

(b) $v_2(t) = (4-t)\left[u(t-2) - u(t-4)\right]$
$v_2(t) = \text{-}(t-4)u(t-2) + (t-4)u(t-4)$
$v_2(t) = \underline{\mathbf{2u(t-2) - r(t-2) + r(t-4)}}$

(c) $v_3(t) = 2\left[u(t-2) - u(t-4)\right] + 4\left[u(t-4) - u(t-6)\right]$
$v_3(t) = \underline{\mathbf{2u(t-2) + 2u(t-4) - 4u(t-6)}}$

(d) $v_4(t) = \text{-}t\left[u(t-1) - u(t-2)\right] = \text{-}t\,u(t-1) + t\,u(t-2)$
$v_4(t) = (\text{-}t+1-1)u(t-1) + (t-2+2)u(t-2)$
$v_4(t) = \underline{\mathbf{\text{-}r(t-1) - u(t-1) + r(t-2) + 2u(t-2)}}$

Chapter 7, Solution 27.

v(*t*) is sketched below.

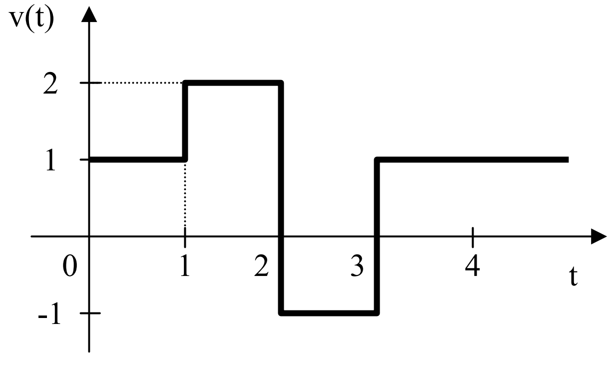

Chapter 7, Solution 28.

$i(t)$ is sketched below.

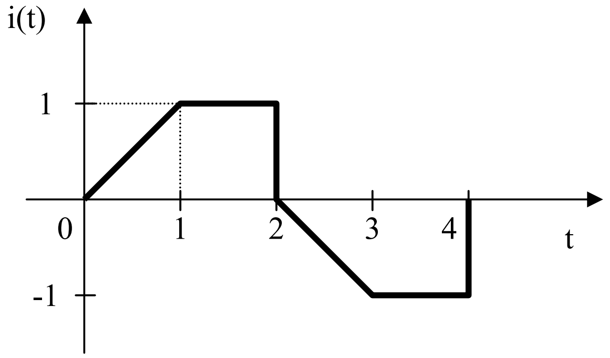

Chapter 7, Solution 29

(a)

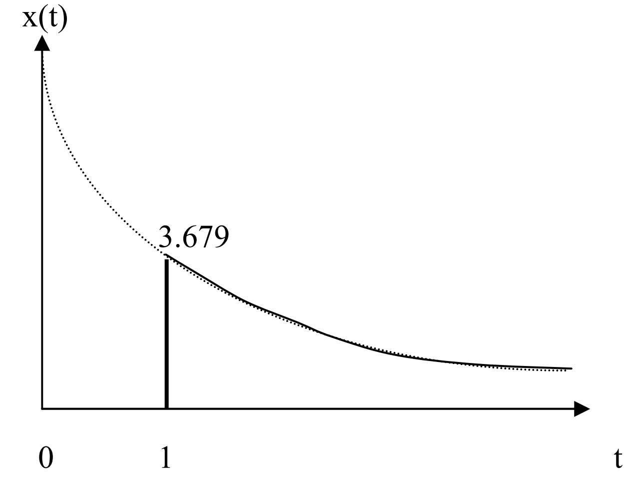

(b)

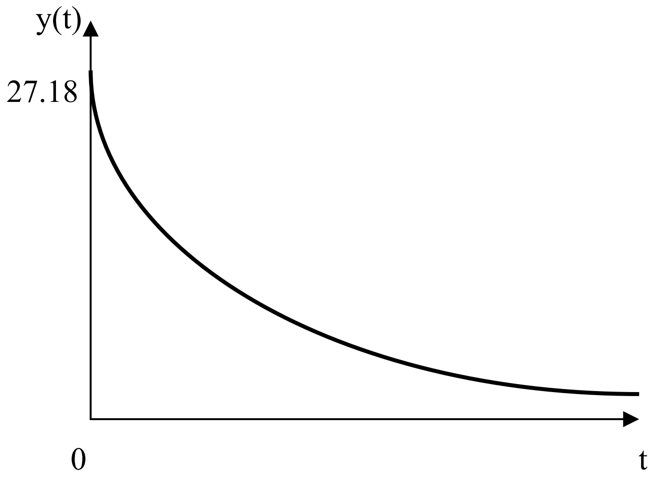

(c) $z(t) = \cos 4t\delta(t-1) = \cos 4\delta(t-1) = -0.6536\delta(t-1)$, which is sketched below.

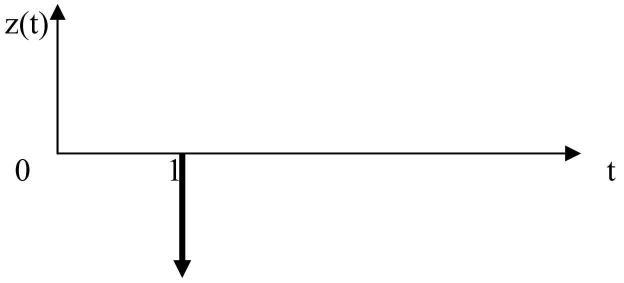

Chapter 7, Solution 30.

(a) $\int_0^{10} 4t^2\,\delta(t-1)\,dt = 4t^2\Big|_{t=1} = \underline{\mathbf{4}}$

(b) $\int_{-\infty}^{\infty} \cos(2\pi t)\,\delta(t-0.5)\,dt = \cos(2\pi t)\Big|_{t=0.5} = \cos\pi = \underline{\mathbf{-1}}$

Chapter 7, Solution 31.

(a) $\int_{-\infty}^{\infty}\left[e^{-4t^2}\,\delta(t-2)\right]dt = e^{-4t^2}\Big|_{t=2} = e^{-16} = \underline{\mathbf{112\times 10^{-9}}}$

(b) $\int_{-\infty}^{\infty}\left[5\delta(t) + e^{-t}\,\delta(t) + \cos 2\pi t\,\delta(t)\right]dt = \left(5 + e^{-t} + \cos(2\pi t)\right)\Big|_{t=0} = 5+1+1 = \underline{\mathbf{7}}$

Chapter 7, Solution 32.

(a) $\int_1^t u(\lambda)d\lambda = \int_1^t 1d\lambda = \lambda \Big|_1^t = \underline{t-1}$

(b) $\int_0^4 r(t-1)dt = \int_0^1 0dt + \int_1^4 (t-1)dt = \frac{t^2}{2} - t\Big|_1^4 = \underline{4.5}$

(c) $\int_1^5 (t-6)^2\delta(t-2)dt = (t-6)^2\Big|_{t=2} = \underline{16}$

Chapter 7, Solution 33.

$$i(t) = \frac{1}{L}\int_0^t v(t)\,dt + i(0)$$

$$i(t) = \frac{10^{-3}}{10\times 10^{-3}}\int_0^t 20\delta(t-2)\,dt + 0$$

$$i(t) = \underline{\mathbf{2\,u(t-2)\ A}}$$

Chapter 7, Solution 34.

(a)
$$\frac{d}{dt}\left[u(t-1)\,u(t+1)\right] = \delta(t-1)u(t+1) +$$
$$u(t-1)\delta(t+1) = \delta(t-1)\bullet 1 + 0\bullet\delta(t+1) = \underline{\delta(t-1)}$$

(b)
$$\frac{d}{dt}\left[r(t-6)\,u(t-2)\right] = u(t-6)u(t-2) +$$
$$r(t-6)\delta(t-2) = u(t-6)\bullet 1 + 0\bullet\delta(t-2) = \underline{u(t-6)}$$

(c)
$$\frac{d}{dt}\left[\sin 4t\,u(t-3)\right] = 4\cos 4t\,u(t-3) + \sin 4t\delta(t-3)$$
$$= 4\cos 4t\,u(t-3) + \sin 4x3\delta(t-3)$$
$$= \underline{4\cos 4t\,u(t-3) - 0.5366\delta(t-3)}$$

Chapter 7, Solution 35.

(a) $v(t) = A\,e^{-5t/3},\ v(0) = A = -2$

$v(t) = \underline{\mathbf{-2\,e^{-5t/3}\ V}}$

(b) $v(t) = A\,e^{2t/3},\ v(0) = A = 5$

$v(t) = \underline{\mathbf{5\,e^{2t/3}\ V}}$

Chapter 7, Solution 36.

(a) $\mathrm{v(t) = A + B e^{-t}, \quad t > 0}$

$\mathrm{A = 1}$, $\quad \mathrm{v(0) = 0 = 1 + B} \quad$ or $\quad \mathrm{B = -1}$

$\mathrm{v(t) =} \quad \underline{\mathbf{1 - e^{-t}\ V, \quad t > 0}}$

(b) $\mathrm{v(t) = A + B e^{t/2}, \quad t > 0}$

$\mathrm{A = -3}$, $\quad \mathrm{v(0) = -6 = -3 + B} \quad$ or $\quad \mathrm{B = -3}$

$\mathrm{v(t) =} \underline{\mathbf{-3\left(1 + e^{t/2}\right) V, \quad t > 0}}$

Chapter 7, Solution 37.

Let $v = v_h + v_p$, $v_p = 10$.

$$\dot{v}_h + \frac{1}{4} v_h = 0 \longrightarrow v_h = Ae^{-t/4}$$

$$v = 10 + Ae^{-0.25t}$$

$$v(0) = 2 = 10 + A \longrightarrow A = -8$$
$$v = 10 - 8e^{-0.25t}$$

(a) $\tau = \underline{4s}$

(b) $v(\infty) = \underline{10}$ V

(c) $\underline{v = 10 - 8e^{-0.25t}}$

Chapter 7, Solution 38

Let $i = i_p + i_h$

$$\dot{i}_h + 3i_h = 0 \longrightarrow i_h = Ae^{-3t}u(t)$$

Let $i_p = ku(t)$, $\quad \dot{i}_p = 0$, $\quad 3ku(t) = 2u(t) \longrightarrow k = \frac{2}{3}$

$$i_p = \frac{2}{3}u(t)$$

$$i = (Ae^{-3t} + \frac{2}{3})u(t)$$

If i(0) =0, then A + 2/3 = 0, i.e. A=-2/3. Thus

$$\underline{i = \frac{2}{3}(1 - e^{-3t})u(t)}$$

Chapter 7, Solution 39.

(a) Before t = 0,

$$v(t) = \frac{1}{4+1}(20) = \underline{\mathbf{4\ V}}$$

After t = 0,

$$v(t) = v(\infty) + \left[\, v(0) - v(\infty) \right] e^{-t/\tau}$$

$$\tau = RC = (4)(2) = 8, \quad v(0) = 4, \qquad v(\infty) = 20$$

$$v(t) = 20 + (8 - 20)e^{-t/8}$$

$$v(t) = \underline{\mathbf{20 - 12e^{-t/8}\ V}}$$

(b) Before t = 0, $v = v_1 + v_2$, where v_1 is due to the 12-V source and v_2 is due to the 2-A source.

$$v_1 = 12\ V$$

To get v_2, transform the current source as shown in Fig. (a).

$$v_2 = -8\ V$$

Thus,

$$v = 12 - 8 = \underline{\mathbf{4\ V}}$$

After t = 0, the circuit becomes that shown in Fig. (b).

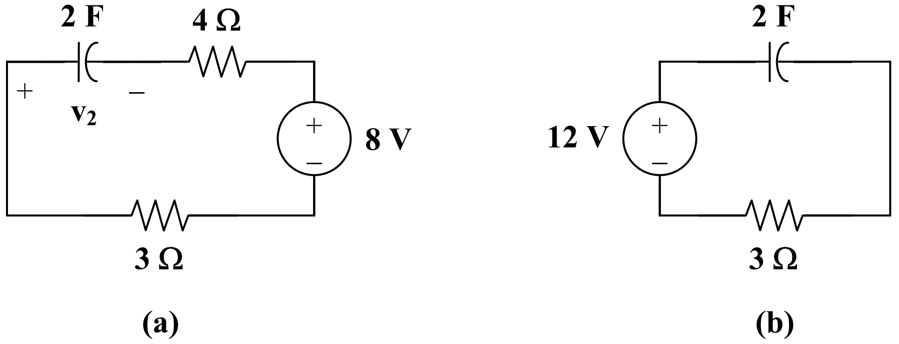

$$v(t) = v(\infty) + \left[\, v(0) - v(\infty)\right]\, e^{-t/\tau}$$
$$v(\infty) = 12\,, \qquad v(0) = 4\,, \qquad \tau = RC = (2)(3) = 6$$
$$v(t) = 12 + (4 - 12)\,e^{-t/6}$$
$$v(t) = \underline{\mathbf{12 - 8\,e^{-t/6}\ V}}$$

Chapter 7, Solution 40.

(a) Before $t = 0$, $v = \underline{\mathbf{12\ V}}$.

After $t = 0$, $v(t) = v(\infty) + \left[\, v(0) - v(\infty)\right]\, e^{-t/\tau}$

$$v(\infty) = 4\,, \qquad v(0) = 12\,, \qquad \tau = RC = (2)(3) = 6$$
$$v(t) = 4 + (12 - 4)\,e^{-t/6}$$
$$v(t) = \underline{\mathbf{4 + 8\,e^{-t/6}\ V}}$$

(b) Before $t = 0$, $v = \underline{\mathbf{12\ V}}$.

After $t = 0$, $v(t) = v(\infty) + \left[\, v(0) - v(\infty)\right]\, e^{-t/\tau}$

After transforming the current source, the circuit is shown below.

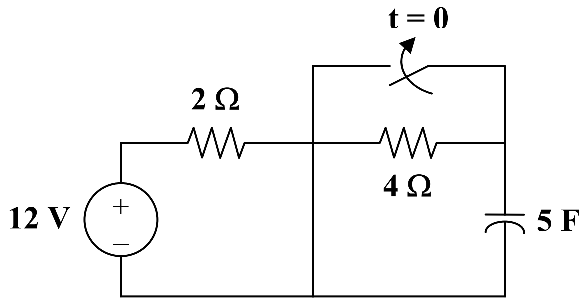

$$v(0) = 12\,, \qquad v(\infty) = 12\,, \qquad \tau = RC = (2)(5) = 10$$
$$v = \underline{\mathbf{12\ V}}$$

Chapter 7, Solution 41.

$$v(0) = 0\,, \qquad v(\infty) = \frac{30}{16}(12) = 10$$

$$R_{eq}C = (6 \,\|\, 30)(1) = \frac{(6)(30)}{36} = 5$$

$$v(t) = v(\infty) + \left[\, v(0) - v(\infty)\right]\, e^{-t/\tau}$$

$$v(t) = 10 + (0 - 10)\,e^{-t/5}$$

$$v(t) = \underline{\mathbf{10\,(1 - e^{-0.2t})\ V}}$$

Chapter 7, Solution 42.

(a)
$$v_o(t) = v_o(\infty) + \left[v_o(0) - v_o(\infty)\right] e^{-t/\tau}$$
$$v_o(0) = 0, \qquad v_o(\infty) = \frac{4}{4+2}(12) = 8$$
$$\tau = R_{eq}C_{eq}, \quad R_{eq} = 2 \,||\, 4 = \frac{4}{3}$$
$$\tau = \frac{4}{3}(3) = 4$$
$$v_o(t) = 8 - 8e^{-t/4}$$
$$v_o(t) = \underline{\mathbf{8(1 - e^{-0.25t})\ V}}$$

(b) For this case, $v_o(\infty) = 0$ so that
$$v_o(t) = v_o(0)e^{-t/\tau}$$
$$v_o(0) = \frac{4}{4+2}(12) = 8, \qquad\qquad \tau = RC = (4)(3) = 12$$
$$v_o(t) = \underline{\mathbf{8e^{-t/12}\ V}}$$

Chapter 7, Solution 43.

Before t = 0, the circuit has reached steady state so that the capacitor acts like an open circuit. The circuit is equivalent to that shown in Fig. (a) after transforming the voltage source.

$$0.5i = 2 - \frac{v_o}{40}, \qquad i = \frac{v_o}{80}$$

Hence, $\frac{1}{2}\frac{v_o}{80} = 2 - \frac{v_o}{40} \longrightarrow v_o = \frac{320}{5} = 64$

$$i = \frac{v_o}{80} = \underline{\mathbf{0.8\ A}}$$

After t = 0, the circuit is as shown in Fig. (b).

$$v_C(t) = v_C(0)e^{-t/\tau}, \qquad \tau = R_{th}C$$

To find R_{th}, we replace the capacitor with a 1-V voltage source as shown in Fig. (c).

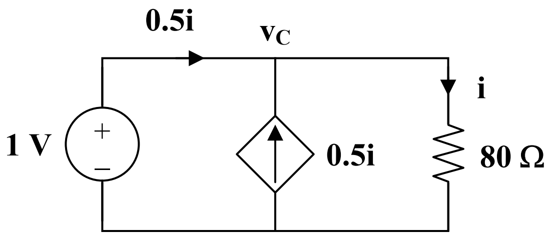

(c)

$$i = \frac{v_C}{80} = \frac{1}{80}, \qquad i_o = 0.5i = \frac{0.5}{80}$$

$$R_{th} = \frac{1}{i_o} = \frac{80}{0.5} = 160\,\Omega, \qquad \tau = R_{th}C = 480$$

$$v_C(0) = 64\text{ V}$$

$$v_C(t) = 64e^{-t/480}$$

$$0.5i = -i_C = -C\frac{dv_C}{dt} = -3\left(\frac{1}{480}\right)64e^{-t/480}$$

$$i(t) = \underline{\mathbf{0.8e^{-t/480}\ A}}$$

Chapter 7, Solution 44.

$$R_{eq} = 6\,||\,3 = 2\,\Omega, \qquad \tau = RC = 4$$

$$v(t) = v(\infty) + \left[\,v(0) - v(\infty)\right]\,e^{-t/\tau}$$

Using voltage division,

$$v(0) = \frac{3}{3+6}(30) = 10\text{ V}, \qquad v(\infty) = \frac{3}{3+6}(12) = 4\text{ V}$$

Thus,

$$v(t) = 4 + (10-4)\,e^{-t/4} = 4 + 6\,e^{-t/4}$$

$$i(t) = C\frac{dv}{dt} = (2)(6)\left(\frac{-1}{4}\right)e^{-t/4} = \underline{\mathbf{-3e^{-0.25t}\ A}}$$

Chapter 7, Solution 45.

$$\text{For } t < 0,\ v_s = 5u(t) = 0 \longrightarrow v(0) = 0$$

$$\text{For } t > 0,\ v_s = 5, \qquad v(\infty) = \frac{4}{4+12}(5) = \frac{5}{4}$$

$$R_{eq} = 7 + 4\,||\,12 = 10, \qquad \tau = R_{eq}C = (10)(1/2) = 5$$

$$v(t) = v(\infty) + \left[\,v(0) - v(\infty)\right]\,e^{-t/\tau}$$

$$v(t) = \underline{\mathbf{1.25(1 - e^{-t/5})\ V}}$$

$$i(t) = C\frac{dv}{dt} = \left(\frac{1}{2}\right)\left(\frac{-5}{4}\right)\left(\frac{-1}{5}\right)e^{-t/5}$$

$$\underline{i(t) = \mathbf{0.125e^{-t/5}\ A}}$$

Chapter 7, Solution 46.

$$\tau = R_{Th}C = (2+6)x0.25 = 2s, \qquad v(0)=0, \qquad v(\infty) = 6i_s = 6x5 = 30$$

$$v(t) = v(\infty) + [v(0) - v(\infty)]e^{-t/\tau} = \underline{30(1-e^{-t/2})} \text{ V}$$

Chapter 7, Solution 47.

For t < 0, $u(t) = 0, \quad u(t-1) = 0, \quad v(0) = 0$

For 0 < t < 1, $\tau = RC = (2+8)(0.1) = 1$

$$v(0) = 0, \qquad v(\infty) = (8)(3) = 24$$
$$v(t) = v(\infty) + [v(0) - v(\infty)]\, e^{-t/\tau}$$
$$v(t) = 24(1 - e^{-t})$$

For t > 1, $v(1) = 24(1 - e^{-1}) = 15.17$

$$-6 + v(\infty) - 24 = 0 \longrightarrow v(\infty) = 30$$
$$v(t) = 30 + (15.17 - 30)\, e^{-(t-1)}$$
$$v(t) = 30 - 14.83\, e^{-(t-1)}$$

Thus,

$$\underline{v(t) = \begin{cases} \mathbf{24(1-e^{-t})\,V,} & \mathbf{0 < t < 1} \\ \mathbf{30 - 14.83\,e^{-(t-1)}\ V,} & \mathbf{t > 1} \end{cases}}$$

Chapter 7, Solution 48.

For t < 0, $u(-t) = 1, \qquad v(0) = 10$ V

For t > 0, $u(-t) = 0, \qquad v(\infty) = 0$

$$R_{th} = 20 + 10 = 30, \qquad \tau = R_{th}C = (30)(0.1) = 3$$
$$v(t) = v(\infty) + [v(0) - v(\infty)]\, e^{-t/\tau}$$
$$v(t) = \underline{\mathbf{10\,e^{-t/3}\ V}}$$

$$i(t) = C\frac{dv}{dt} = (0.1)\left(\frac{-1}{3}\right)10\,e^{-t/3}$$

$$i(t) = \underline{\mathbf{\frac{-1}{3}e^{-t/3}\ A}}$$

Chapter 7, Solution 49.

For $0 < t < 1$, $v(0) = 0$, $v(\infty) = (2)(4) = 8$

$$R_{eq} = 4 + 6 = 10, \qquad \tau = R_{eq}C = (10)(0.5) = 5$$

$$v(t) = v(\infty) + \left[v(0) - v(\infty) \right] e^{-t/\tau}$$

$$v(t) = 8\left(1 - e^{-t/5}\right) \text{ V}$$

For $t > 1$, $v(1) = 8\left(1 - e^{-0.2}\right) = 1.45$, $v(\infty) = 0$

$$v(t) = v(\infty) + \left[v(1) - v(\infty) \right] e^{-(t-1)/\tau}$$

$$v(t) = 1.45 e^{-(t-1)/5} \text{ V}$$

Thus,

$$v(t) = \begin{cases} \mathbf{8\left(1 - e^{-t/5}\right) V}, & \mathbf{0 < t < 1} \\ \mathbf{1.45 e^{-(t-1)/5} \ V}, & \mathbf{t > 1} \end{cases}$$

Chapter 7, Solution 50.

For the capacitor voltage,

$$v(t) = v(\infty) + \left[v(0) - v(\infty) \right] e^{-t/\tau}$$

$$v(0) = 0$$

For $t < 0$, we transform the current source to a voltage source as shown in Fig. (a).

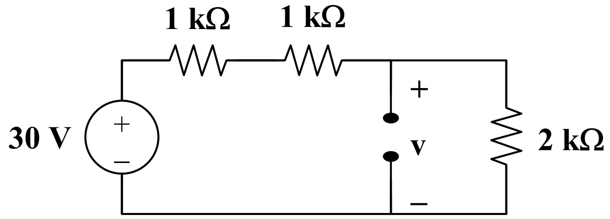

(a)

$$v(\infty) = \frac{2}{2+1+1}(30) = 15 \text{ V}$$

$$R_{th} = (1+1) \,\|\, 2 = 1 \text{ k}\Omega$$

$$\tau = R_{th}C = 10^3 \times \frac{1}{4} \times 10^{-3} = \frac{1}{4}$$

$$v(t) = 15\left(1 - e^{-4t}\right), \quad t > 0$$

We now obtain i_x from v(t). Consider Fig. (b).

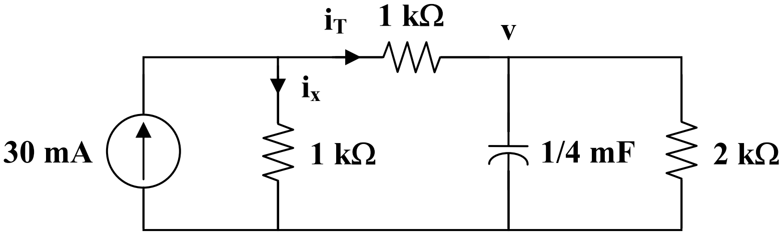

(b)

$$i_x = 30\text{ mA} - i_T$$

But $$i_T = \frac{v}{R_3} + C\frac{dv}{dt}$$

$$i_T(t) = 7.5\left(1 - e^{-4t}\right)\text{ mA} + \frac{1}{4}\times 10^{-3}\,(-15)(-4)e^{-4t}\text{ A}$$

$$i_T(t) = 7.5\left(1 + e^{-4t}\right)\text{ mA}$$

Thus,

$$i_x(t) = 30 - 7.5 - 7.5e^{-4t}\text{ mA}$$

$$i_x(t) = \underline{\mathbf{7.5\left(3 - e^{-4t}\right)mA, \quad t > 0}}$$

Chapter 7, Solution 51.

Consider the circuit below.

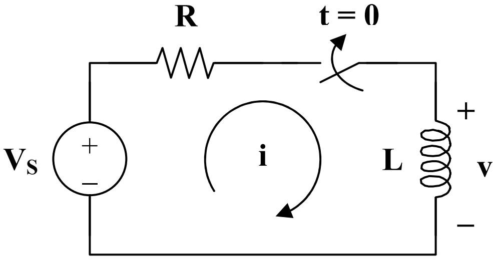

After the switch is closed, applying KVL gives

$$V_S = Ri + L\frac{di}{dt}$$

or $$L\frac{di}{dt} = -R\left(i - \frac{V_S}{R}\right)$$

$$\frac{di}{i - V_S/R} = \frac{-R}{L}dt$$

Integrating both sides,

$$\ln\left(i - \frac{V_S}{R}\right)\Bigg|_{I_0}^{i(t)} = \frac{-R}{L}t$$

$$\ln\left(\frac{i - V_S/R}{I_0 - V_S/R}\right) = \frac{-t}{\tau}$$

or

$$\frac{i - V_S/R}{I_0 - V_S/R} = e^{-t/\tau}$$

$$\underline{\mathbf{i(t)} = \frac{\mathbf{V_S}}{\mathbf{R}} + \left(\mathbf{I_0} - \frac{\mathbf{V_S}}{\mathbf{R}}\right)\mathbf{e^{-t/\tau}}}$$

which is the same as Eq. (7.60).

Chapter 7, Solution 52.

$$i(0) = \frac{20}{10} = 2\text{ A}, \qquad i(\infty) = 2\text{ A}$$

$$i(t) = i(\infty) + \left[i(0) - i(\infty)\right] e^{-t/\tau}$$

$$i(t) = \underline{\mathbf{2\ A}}$$

Chapter 7, Solution 53.

(a) Before t = 0, $i = \frac{25}{3+2} = \underline{\mathbf{5\ A}}$

After t = 0, $i(t) = i(0)e^{-t/\tau}$

$$\tau = \frac{L}{R} = \frac{4}{2} = 2, \qquad i(0) = 5$$

$$i(t) = \underline{\mathbf{5e^{-t/2}\ A}}$$

(b) Before t = 0, the inductor acts as a short circuit so that the 2 Ω and 4 Ω resistors are short-circuited.

$$i(t) = \underline{\mathbf{6\ A}}$$

After t = 0, we have an RL circuit.

$$i(t) = i(0)e^{-t/\tau}, \qquad \tau = \frac{L}{R} = \frac{3}{2}$$

$$i(t) = \underline{\mathbf{6e^{-2t/3}\ A}}$$

Chapter 7, Solution 54.

(a) Before t = 0, i is obtained by current division or

$$i(t) = \frac{4}{4+4}(2) = \underline{\mathbf{1\ A}}$$

After t = 0,

$$i(t) = i(\infty) + \left[i(0) - i(\infty) \right] e^{-t/\tau}$$

$$\tau = \frac{L}{R_{eq}}, \qquad R_{eq} = 4 + 4 \,||\, 12 = 7\,\Omega$$

$$\tau = \frac{3.5}{7} = \frac{1}{2}$$

$$i(0) = 1, \qquad i(\infty) = \frac{4\,||\,12}{4 + 4\,||\,12}(2) = \frac{3}{4+3}(2) = \frac{6}{7}$$

$$i(t) = \frac{6}{7} + \left(1 - \frac{6}{7}\right) e^{-2t}$$

$$i(t) = \underline{\frac{\mathbf{1}}{\mathbf{7}}\left(\mathbf{6 - e^{-2t}}\right)\mathbf{A}}$$

(b) Before t = 0, $i(t) = \frac{10}{2+3} = \underline{\mathbf{2\ A}}$

After t = 0, $R_{eq} = 3 + 6\,||\,2 = 4.5$

$$\tau = \frac{L}{R_{eq}} = \frac{2}{4.5} = \frac{4}{9}$$

$$i(0) = 2$$

To find $i(\infty)$, consider the circuit below, at t = when the inductor becomes a short circuit,

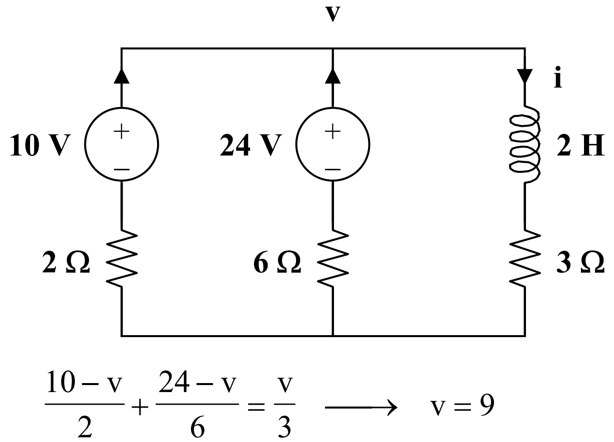

$$\frac{10 - v}{2} + \frac{24 - v}{6} = \frac{v}{3} \longrightarrow v = 9$$

$$i(\infty) = \frac{v}{3} = 3\text{ A}$$

$$i(t) = 3 + (2 - 3)e^{-9t/4}$$

$$i(t) = \underline{\mathbf{3 - e^{-9t/4}\ A}}$$

Chapter 7, Solution 55.

For t < 0, consider the circuit shown in Fig. (a).

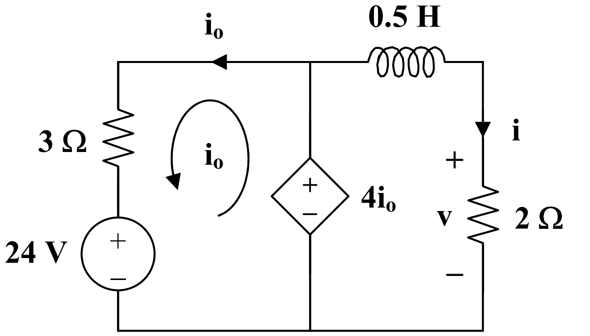

(a)

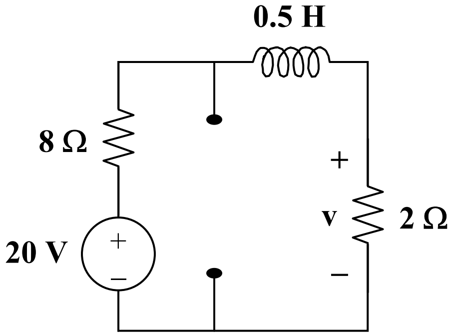

(b)

$$3i_o + 24 - 4i_o = 0 \longrightarrow i_o = 24$$

$$\underline{v(t) = 4i_o = \mathbf{96\ V}} \qquad i = \frac{v}{2} = 48\ A$$

For t > 0, consider the circuit in Fig. (b).

$$i(t) = i(\infty) + \left[i(0) - i(\infty)\right] e^{-t/\tau}$$

$$i(0) = 48, \qquad i(\infty) = \frac{20}{8+2} = 2\ A$$

$$R_{th} = 2 + 8 = 10\,\Omega, \qquad \tau = \frac{L}{R_{th}} = \frac{0.5}{10} = \frac{1}{20}$$

$$i(t) = 2 + (48 - 2)e^{-20t} = 2 + 46e^{-20t}$$

$$v(t) = 2i(t) = \underline{\mathbf{4 + 92e^{-20t}\ V}}$$

Chapter 7, Solution 56.

$$R_{eq} = 6 + 20 \,||\, 5 = 10\,\Omega, \qquad \tau = \frac{L}{R} = 0.05$$

$$i(t) = i(\infty) + \left[i(0) - i(\infty)\right] e^{-t/\tau}$$

i(0) is found by applying nodal analysis to the following circuit.

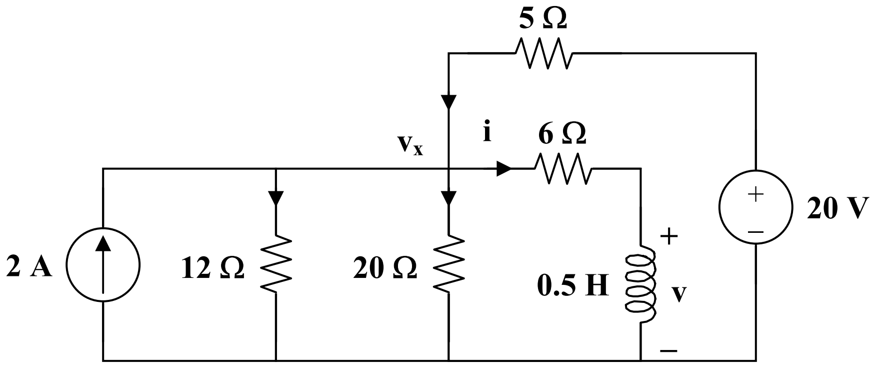

$$2 + \frac{20 - v_x}{5} = \frac{v_x}{12} + \frac{v_x}{20} + \frac{v_x}{6} \longrightarrow v_x = 12$$

$$i(0) = \frac{v_x}{6} = 2 \text{ A}$$

Since $20 \| 5 = 4$,

$$i(\infty) = \frac{4}{4+6}(4) = 1.6$$

$$i(t) = 1.6 + (2 - 1.6)e^{-t/0.05} = 1.6 + 0.4e^{-20t}$$

$$v(t) = L\frac{di}{dt} = \frac{1}{2}(0.4)(-20)e^{-20t}$$

$$v(t) = \underline{\mathbf{-4e^{-20t}\ V}}$$

Chapter 7, Solution 57.

At $t = 0^-$, the circuit has reached steady state so that the inductors act like short circuits.

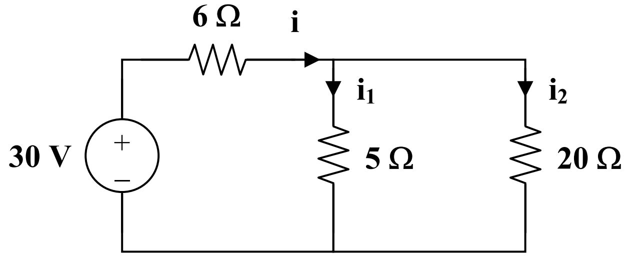

$$i = \frac{30}{6 + 5 \| 20} = \frac{30}{10} = 3, \qquad i_1 = \frac{20}{25}(3) = 2.4, \qquad i_2 = 0.6$$

$$i_1(0) = 2.4 \text{ A}, \qquad i_2(0) = 0.6 \text{ A}$$

For t > 0, the switch is closed so that the energies in L_1 and L_2 flow through the closed switch and become dissipated in the 5 Ω and 20 Ω resistors.

$$i_1(t) = i_1(0)\, e^{-t/\tau_1}, \qquad \tau_1 = \frac{L_1}{R_1} = \frac{2.5}{5} = \frac{1}{2}$$

$$i_1(t) = \underline{\mathbf{2.4\, e^{-2t}\ A}}$$

$$i_2(t) = i_2(0)\, e^{-t/\tau_2}, \qquad \tau_2 = \frac{L_2}{R_2} = \frac{4}{20} = \frac{1}{5}$$

$$i_2(t) = \underline{\mathbf{0.6\, e^{-5t}\ A}}$$

Chapter 7, Solution 58.

For t < 0, $\quad v_o(t) = 0$

For t > 0, $\quad i(0) = 10, \qquad i(\infty) = \dfrac{20}{1+3} = 5$

$$R_{th} = 1 + 3 = 4\,\Omega, \qquad \tau = \frac{L}{R_{th}} = \frac{1/4}{4} = \frac{1}{16}$$

$$i(t) = i(\infty) + \left[i(0) - i(\infty) \right] e^{-t/\tau}$$

$$i(t) = 5\left(1 + e^{-16t}\right) A$$

$$v_o(t) = 3i + L\frac{di}{dt} = 15\left(1 + e^{-16t}\right) + \frac{1}{4}(-16)(5)e^{-16t}$$

$$v_o(t) = \underline{\mathbf{15 - 5e^{-16t}\ V}}$$

Chapter 7, Solution 59.

Let I be the current through the inductor.

For t < 0, $\quad v_s = 0, \qquad i(0) = 0$

For t > 0, $\quad R_{eq} = 4 + 6 \,||\, 3 = 6, \qquad \tau = \dfrac{L}{R_{eq}} = \dfrac{1.5}{6} = 0.25$

$$i(\infty) = \frac{2}{2+4}(3) = 1$$

$$i(t) = i(\infty) + \left[i(0) - i(\infty) \right] e^{-t/\tau}$$

$$i(t) = 1 - e^{-4t}$$

$$v_o(t) = L\frac{di}{dt} = (1.5)(-4)(-e^{-4t})$$

$$v_o(t) = \underline{\mathbf{6\, e^{-4t}\ V}}$$

Chapter 7, Solution 60.

Let I be the inductor current.

For t < 0, $u(t) = 0 \longrightarrow i(0) = 0$

For t > 0, $R_{eq} = 5 \,||\, 20 = 4\,\Omega$, $\tau = \dfrac{L}{R_{eq}} = \dfrac{8}{4} = 2$

$$i(\infty) = 4$$
$$i(t) = i(\infty) + \left[\, i(0) - i(\infty) \right] e^{-t/\tau}$$
$$i(t) = 4\left(1 - e^{-t/2}\right)$$

$$v(t) = L\frac{di}{dt} = (8)(-4)\left(\frac{-1}{2}\right)e^{-t/2}$$
$$v(t) = \underline{\mathbf{16\,e^{-0.5t}\ V}}$$

Chapter 7, Solution 61.

The current source is transformed as shown below.

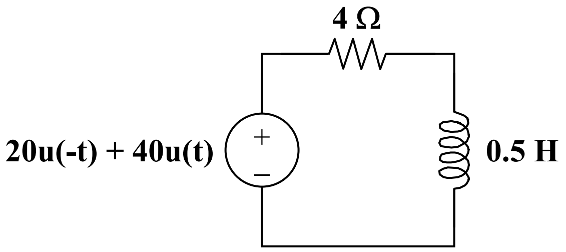

$$\tau = \frac{L}{R} = \frac{1/2}{4} = \frac{1}{8}, \qquad i(0) = 5, \qquad i(\infty) = 10$$
$$i(t) = i(\infty) + \left[\, i(0) - i(\infty) \right] e^{-t/\tau}$$
$$i(t) = \underline{\mathbf{10 - 5\,e^{-8t}\ A}}$$

$$v(t) = L\frac{di}{dt} = \left(\frac{1}{2}\right)(-5)(-8)\,e^{-8t}$$
$$v(t) = \underline{\mathbf{20\,e^{-8t}\ V}}$$

Chapter 7, Solution 62.

$$\tau = \frac{L}{R_{eq}} = \frac{2}{3\,||\,6} = 1$$

For $0 < t < 1$, $u(t-1) = 0$ so that

$$i(0) = 0, \qquad i(\infty) = \frac{1}{6}$$

$$i(t) = \frac{1}{6}\left(1 - e^{-t}\right)$$

For t > 1, $\quad i(1) = \frac{1}{6}\left(1 - e^{-1}\right) = 0.1054$

$$i(\infty) = \frac{1}{3} + \frac{1}{6} = \frac{1}{2}$$

$$i(t) = 0.5 + (0.1054 - 0.5)\,e^{-(t-1)}$$

$$i(t) = 0.5 - 0.3946\,e^{-(t-1)}$$

Thus,

$$i(t) = \begin{cases} \mathbf{\frac{1}{6}\left(1 - e^{-t}\right)\ A} & \mathbf{0 < t < 1} \\ \mathbf{0.5 - 0.3946\,e^{-(t-1)}\ A} & \mathbf{t > 1} \end{cases}$$

Chapter 7, Solution 63.

For t < 0, $\quad u(-t) = 1, \quad i(0) = \frac{10}{5} = 2$

For t > 0, $\quad u(-t) = 0, \quad i(\infty) = 0$

$$R_{th} = 5 \,||\, 20 = 4\,\Omega, \qquad \tau = \frac{L}{R_{th}} = \frac{0.5}{4} = \frac{1}{8}$$

$$i(t) = i(\infty) + \left[\, i(0) - i(\infty)\right]\, e^{-t/\tau}$$

$$i(t) = \mathbf{2\,e^{-8t}\ A}$$

$$v(t) = L\frac{di}{dt} = \left(\frac{1}{2}\right)(-8)(2)\,e^{-8t}$$

$$v(t) = \mathbf{-8\,e^{-8t}\ V}$$

Chapter 7, Solution 64.

Let i be the inductor current.

For t < 0, the inductor acts like a short circuit and the 3 Ω resistor is short-circuited so that the equivalent circuit is shown in Fig. (a).

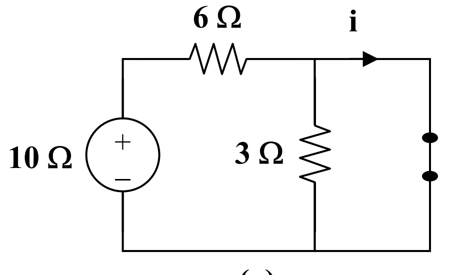

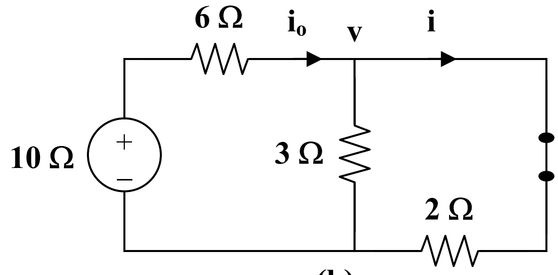

$$i = i(0) = \frac{10}{6} = 1.667 \text{ A}$$

For t > 0, $R_{th} = 2 + 3 \parallel 6 = 4\,\Omega$, $\tau = \frac{L}{R_{th}} = \frac{4}{4} = 1$

To find $i(\infty)$, consider the circuit in Fig. (b).

$$\frac{10 - v}{6} = \frac{v}{3} + \frac{v}{2} \longrightarrow v = \frac{10}{6}$$

$$i = i(\infty) = \frac{v}{2} = \frac{5}{6}$$

$$i(t) = i(\infty) + \left[i(0) - i(\infty) \right] e^{-t/\tau}$$

$$i(t) = \frac{5}{6} + \left(\frac{10}{6} - \frac{5}{6} \right) e^{-t} = \frac{5}{6}\left(1 - e^{-t} \right) \text{ A}$$

v_o is the voltage across the 4 H inductor and the 2 Ω resistor

$$v_o(t) = 2i + L\frac{di}{dt} = \frac{10}{6} + \frac{10}{6} e^{-t} + (4)\left(\frac{5}{6}\right)(-1)\, e^{-t} = \frac{10}{6} - \frac{10}{6} e^{-t}$$

$$v_o(t) = \underline{\mathbf{1.667\left(1 - e^{-t}\right) V}}$$

Chapter 7, Solution 65.

Since $v_s = 10\left[u(t) - u(t-1) \right]$, this is the same as saying that a 10 V source is turned on at t = 0 and a -10 V source is turned on later at t = 1. This is shown in the figure below.

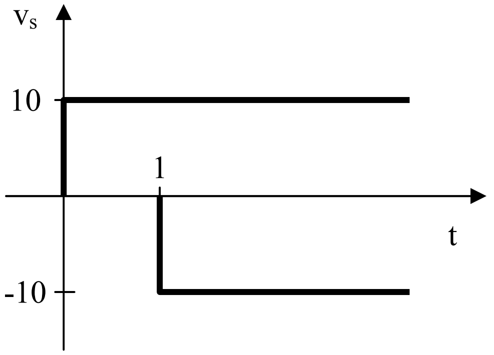

For 0 < t < 1, $i(0) = 0$, $i(\infty) = \frac{10}{5} = 2$

$$R_{th} = 5 \parallel 20 = 4, \qquad \tau = \frac{L}{R_{th}} = \frac{2}{4} = \frac{1}{2}$$

$$i(t) = i(\infty) + \left[i(0) - i(\infty) \right] e^{-t/\tau}$$

$$i(t) = 2\left(1 - e^{-2t}\right) \text{ A}$$
$$i(1) = 2\left(1 - e^{-2}\right) = 1.729$$

For $t > 1$, $\quad i(\infty) = 0 \quad$ since $v_s = 0$

$$i(t) = i(1)e^{-(t-1)/\tau}$$
$$i(t) = 1.729e^{-2(t-1)} \text{ A}$$

Thus,

$$i(t) = \begin{cases} \mathbf{2\left(1 - e^{-2t}\right) A} & \mathbf{0 < t < 1} \\ \mathbf{1.729\, e^{-2(t-1)} \ A} & \mathbf{t > 1} \end{cases}$$

Chapter 7, Solution 66.

Following Practice Problem 7.14,

$$v(t) = V_T\, e^{-t/\tau}$$

$$V_T = v(0) = -4, \qquad \tau = R_f C = (10 \times 10^3)(2 \times 10^{-6}) = \frac{1}{50}$$

$$v(t) = -4e^{-50t}$$

$$v_o(t) = -v(t) = 4e^{-50t}, \quad t > 0$$

$$i_o(t) = \frac{v_o(t)}{R_o} = \frac{4}{10 \times 10^3} e^{-50t} = \mathbf{0.4e^{-50t} \ mA, \quad t > 0}$$

Chapter 7, Solution 67.

The op amp is a voltage follower so that $v_o = v$ as shown below.

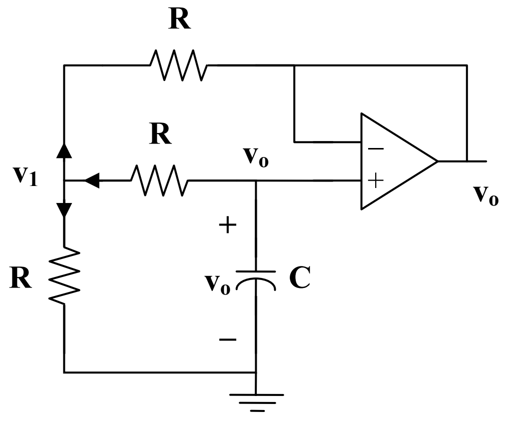

At node 1,

$$\frac{v_o - v_1}{R} = \frac{v_1 - 0}{R} + \frac{v_1 - v_o}{R} \longrightarrow v_1 = \frac{2}{3}v_o$$

At the noninverting terminal,

$$C\frac{dv_o}{dt} + \frac{v_o - v_1}{R} = 0$$

$$-RC\frac{dv_o}{dt} = v_o - v_1 = v_o - \frac{2}{3}v_o = \frac{1}{3}v_o$$

$$\frac{dv_o}{dt} = -\frac{v_o}{3RC}$$

$$v_o(t) = V_T\, e^{-t/3RC}$$

$$V_T = v_o(0) = 5\text{ V}, \qquad \tau = 3RC = (3)(10\times10^3)(1\times10^{-6}) = \frac{3}{100}$$

$$v_o(t) = \underline{\mathbf{5e^{-100t/3}\ V}}$$

Chapter 7, Solution 68.

This is a very interesting problem and has both an important ideal solution as well as an important practical solution. Let us look at the ideal solution first. Just before the switch closes, the value of the voltage across the capacitor is zero which means that the voltage at both terminals input of the op amp are each zero. As soon as the switch closes, the output tries to go to a voltage such that the input to the op amp both go to 4 volts. The ideal op amp puts out whatever current is necessary to reach this condition. An infinite (impulse) current is necessary if the voltage across the capacitor is to go to 8 volts in zero time (8 volts across the capacitor will result in 4 volts appearing at the negative terminal of the op amp). So v_o will be equal to **8 volts** for all $t > 0$.

What happens in a real circuit? Essentially, the output of the amplifier portion of the op amp goes to whatever its maximum value can be. Then this maximum voltage appears across the output resistance of the op amp and the capacitor that is in series with it. This results in an exponential rise in the capacitor voltage to the steady-state value of 8 volts.

$vC(t) = V_{op\ amp\ max}(1 - e^{-t/(RoutC)})$ volts, for all values of vC less than 8 V,

= 8 V when t is large enough so that the 8 V is reached.

Chapter 7, Solution 69.

Let v_x be the capacitor voltage.

For $t < 0$, $\quad v_x(0) = 0$

For t > 0, the 20 kΩ and 100 kΩ resistors are in series since no current enters the op amp terminals. As $t \rightarrow \infty$, the capacitor acts like an open circuit so that

$$v_x(\infty) = \frac{20+100}{20+100+10}(4) = \frac{48}{13}$$

$$R_{th} = 20+100 = 120\ \text{k}\Omega, \qquad \tau = R_{th}C = (120\times10^{3})(25\times10^{-3}) = 3000$$

$$v_x(t) = v_x(\infty) + \left[\, v_x(0) - v_x(\infty)\right] e^{-t/\tau}$$

$$v_x(t) = \frac{48}{13}\left(1 - e^{-t/3000}\right)$$

$$v_o(t) = \frac{100}{120} v_x(t) = \underline{\mathbf{\frac{40}{13}\left(1 - e^{-t/3000}\right) V}}$$

Chapter 7, Solution 70.

Let v = capacitor voltage.

For t < 0, the switch is open and $v(0) = 0$.

For t > 0, the switch is closed and the circuit becomes as shown below.

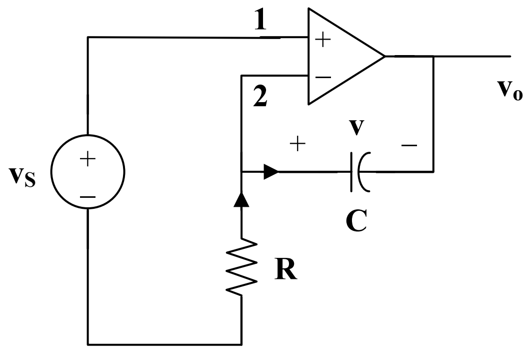

$$v_1 = v_2 = v_s \qquad (1)$$

$$\frac{0 - v_s}{R} = C\frac{dv}{dt} \qquad (2)$$

where $v = v_s - v_o \longrightarrow v_o = v_s - v$ (3)

From (1),

$$\frac{dv}{dt} = \frac{v_s}{RC} = 0$$

$$v = \frac{-1}{RC}\int v_s\, dt + v(0) = \frac{-t\, v_s}{RC}$$

Since v is constant,

$$RC = (20 \times 10^3)(5 \times 10^{-6}) = 0.1$$

$$v = \frac{-20t}{0.1} \text{ mV} = -200t \text{ mV}$$

From (3),

$$v_o = v_s - v = 20 + 200t$$

$$v_o = \underline{\mathbf{20(1+10t)\ mV}}$$

Chapter 7, Solution 71.

Let v = voltage across the capacitor.

Let v_o = voltage across the 8 kΩ resistor.

For $t < 2$, $v = 0$ so that $v(2) = 0$.

For $t > 2$, we have the circuit shown below.

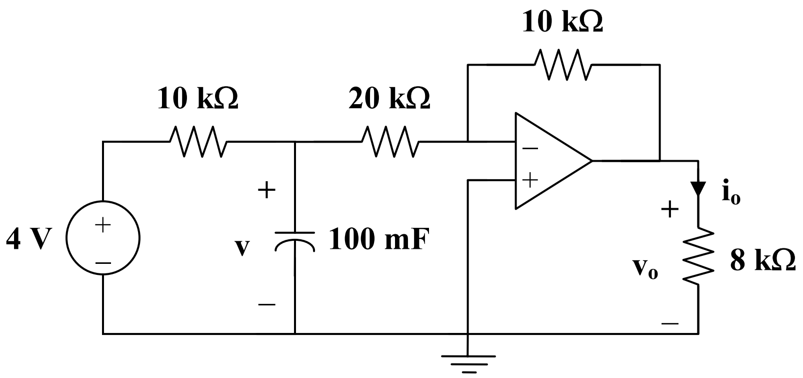

Since no current enters the op amp, the input circuit forms an RC circuit.

$$\tau = RC = (10 \times 10^3)(100 \times 10^{-3}) = 1000$$

$$v(t) = v(\infty) + \left[v(2) - v(\infty) \right] e^{-(t-2)/\tau}$$

$$v(t) = 4\left(1 - e^{-(t-2)/1000}\right)$$

As an inverter,

$$v_o = \frac{-10k}{20k} v = 2\left(e^{-(t-2)/1000} - 1\right)$$

$$i_o = \frac{v_o}{8} = \underline{\mathbf{0.25\left(e^{-(t-2)/1000} - 1\right) A}}$$

Chapter 7, Solution 72.

The op amp acts as an emitter follower so that the Thevenin equivalent circuit is shown below.

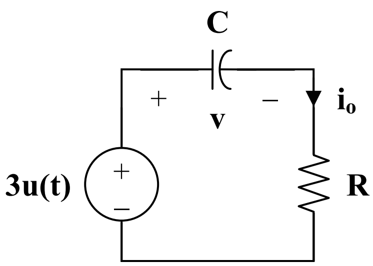

Hence,

$$v(t) = v(\infty) + \left[v(0) - v(\infty) \right] e^{-t/\tau}$$

$$v(0) = -2\ V, \quad v(\infty) = 3\ V, \quad \tau = RC = (10 \times 10^{3})(10 \times 10^{-6}) = 0.1$$

$$v(t) = 3 + (-2 - 3)e^{-10t} = 3 - 5e^{-10t}$$

$$i_o = C\frac{dv}{dt} = (10 \times 10^{-6})(-5)(-10)e^{-10t}$$

$$i_o = \underline{\mathbf{0.5e^{-10t}\ mA,\quad t > 0}}$$

Chapter 7, Solution 73.

Consider the circuit below.

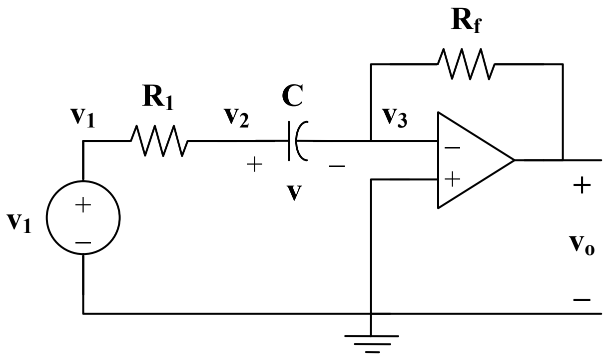

At node 2,

$$\frac{v_1 - v_2}{R_1} = C\frac{dv}{dt} \qquad (1)$$

At node 3,

$$C\frac{dv}{dt} = \frac{v_3 - v_o}{R_f} \qquad (2)$$

But $v_3 = 0$ and $v = v_2 - v_3 = v_2$. Hence, (1) becomes

$$\frac{v_1 - v}{R_1} = C\frac{dv}{dt}$$

$$v_1 - v = R_1 C\frac{dv}{dt}$$

or $$\frac{dv}{dt} + \frac{v}{R_1 C} = \frac{v_1}{R_1 C}$$

which is similar to Eq. (7.42). Hence,

$$v(t) = \begin{cases} v_T & t < 0 \\ v_1 + (v_T - v_1)e^{-t/\tau} & t > 0 \end{cases}$$

where $v_T = v(0) = 1$ and $v_1 = 4$

$$\tau = R_1 C = (10 \times 10^3)(20 \times 10^{-6}) = 0.2$$

$$v(t) = \begin{cases} 1 & t < 0 \\ 4 - 3e^{-5t} & t > 0 \end{cases}$$

From (2),

$$v_o = -R_f C\frac{dv}{dt} = (20 \times 10^3)(20 \times 10^{-6})(15e^{-5t})$$

$$v_o = -6e^{-5t}, \quad t > 0$$

$$v_o = \underline{\mathbf{-6e^{-5t}\,u(t)\ V}}$$

Chapter 7, Solution 74.

Let v = capacitor voltage.

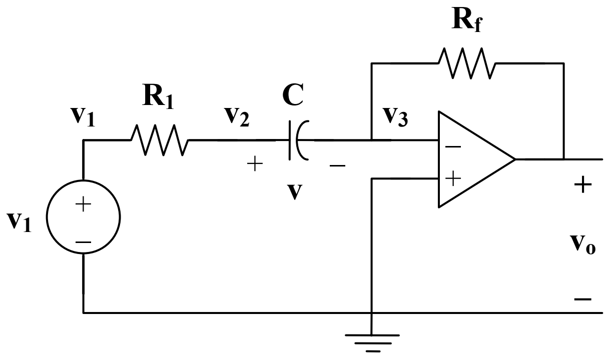

For t < 0, $v(0) = 0$

For t > 0, $i_s = 10\ \mu A$. Consider the circuit below.

$$i_s = C\frac{dv}{dt} + \frac{v}{R} \tag{1}$$

$$v(t) = v(\infty) + \left[\, v(0) - v(\infty)\right] e^{-t/\tau} \tag{2}$$

It is evident from the circuit that

$$\tau = RC = (2\times10^{-6})(50\times10^{3}) = 0.1$$

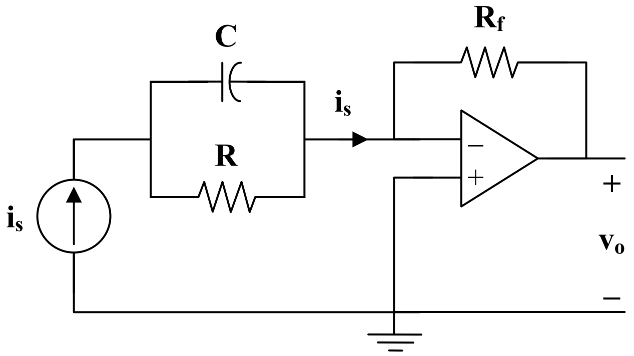

At steady state, the capacitor acts like an open circuit so that i_s passes through R. Hence,

$$v(\infty) = i_s R = (10\times10^{-6})(50\times10^{3}) = 0.5\ V$$

Then,

$$v(t) = 0.5\left(1 - e^{-10t}\right)\ V \tag{3}$$

But $$i_s = \frac{0 - v_o}{R_f} \longrightarrow v_o = -i_s R_f \tag{4}$$

Combining (1), (3), and (4), we obtain

$$v_o = \frac{-R_f}{R} v - R_f C \frac{dv}{dt}$$

$$v_o = \frac{-1}{5} v - (10\times10^{3})(2\times10^{-6})\frac{dv}{dt}$$

$$v_o = -0.1 + 0.1e^{-10t} - (2\times10^{-2})(0.5)\left(-10e^{-10t}\right)$$

$$v_o = 0.2e^{-10t} - 0.1$$

$$v_o = \underline{\mathbf{0.1\left(2e^{-10t} - 1\right)\ V}}$$

Chapter 7, Solution 75.

Let v_1 = voltage at the noninverting terminal.
Let v_2 = voltage at the inverting terminal.

For t > 0, $v_1 = v_2 = v_s = 4$

$$\frac{0 - v_s}{R_1} = i_o, \quad R_1 = 20\ k\Omega$$

$$v_o = -i_o R \qquad (1)$$

Also, $i_o = \frac{v}{R_2} + C\frac{dv}{dt}, \qquad R_2 = 10\ k\Omega, \quad C = 2\ \mu F$

i.e. $$\frac{-v_s}{R_1} = \frac{v}{R_2} + C\frac{dv}{dt} \qquad (2)$$

This is a step response.

$$v(t) = v(\infty) + \left[\, v(0) - v(\infty)\right] e^{-t/\tau}, \qquad v(0) = 1$$

where $\tau = R_2 C = (10 \times 10^3)(2 \times 10^{-6}) = \frac{1}{50}$

At steady state, the capacitor acts like an open circuit so that i_o passes through R_2. Hence, as $t \to \infty$

$$\frac{-v_s}{R_1} = i_o = \frac{v(\infty)}{R_2}$$

i.e. $$v(\infty) = \frac{-R_2}{R_1} v_s = \frac{-10}{20}(4) = -2$$

$$v(t) = -2 + (1 + 2)e^{-50t}$$
$$v(t) = -2 + 3e^{-50t}$$

But $v = v_s - v_o$

or $v_o = v_s - v = 4 + 2 - 3e^{-50t}$

$v_o =$ $\underline{\mathbf{6 - 3e^{-50t}\ V}}$

$$i_o = \frac{-v_s}{R_1} = \frac{-4}{20k} = -0.2\ mA$$

or $i_o = \frac{v}{R_2} + C\frac{dv}{dt} =$ $\underline{\mathbf{-0.2\ mA}}$

Chapter 7, Solution 76.

The schematic is shown below. For the pulse, we use IPWL and enter the corresponding values as attributes as shown. By selecting Analysis/Setup/Transient, we let Print Step = 25 ms and Final Step = 2 s since the width of the input pulse is 1 s. After saving and simulating the circuit, we select Trace/Add and display –V(C1:2). The plot of V(t) is shown below.

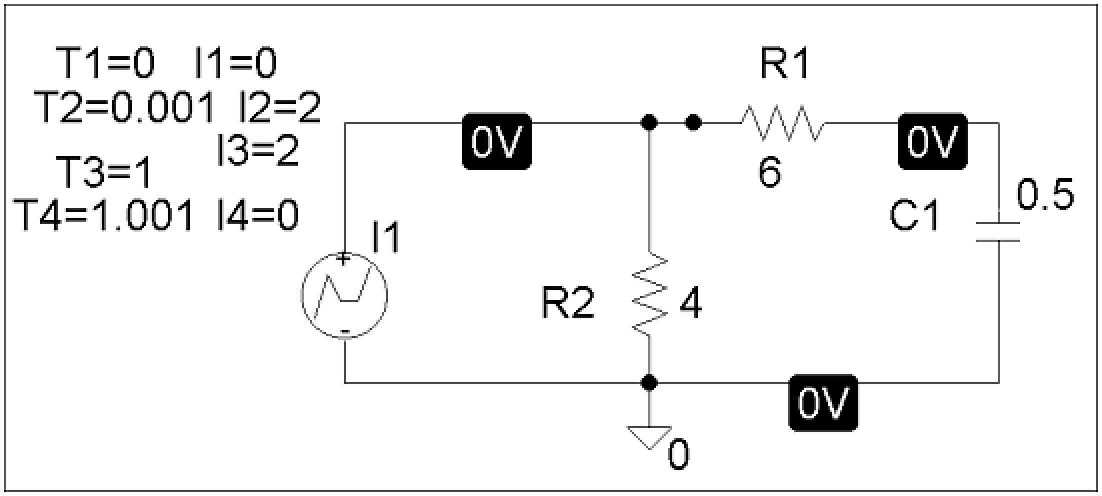

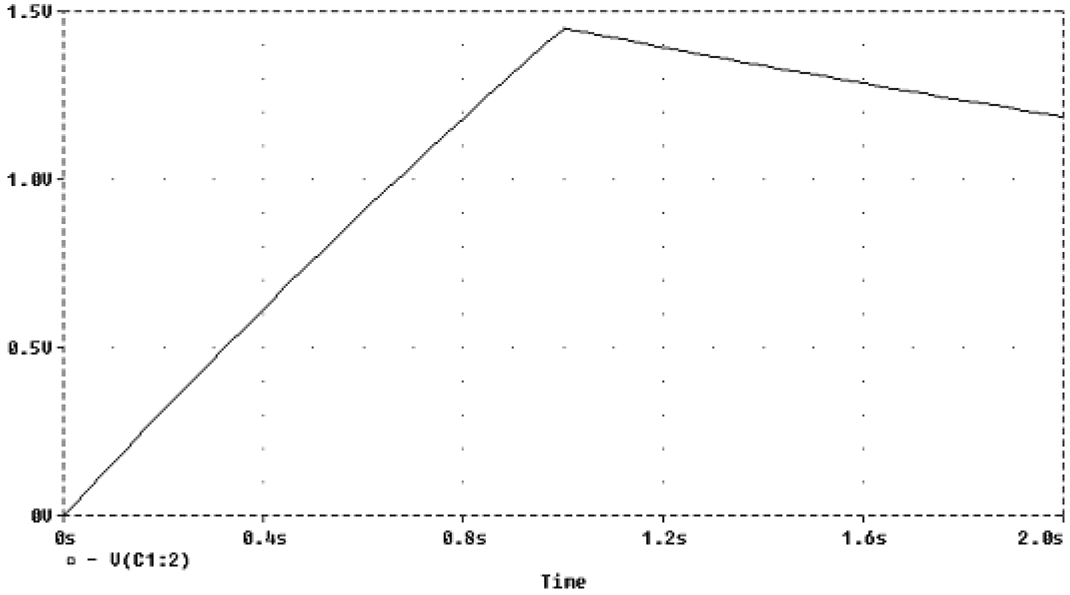

Chapter 7, Solution 77.

The schematic is shown below. We click Marker and insert Mark Voltage Differential at the terminals of the capacitor to display V after simulation. The plot of V is shown below. Note from the plot that V(0) = 12 V and V(∞) = -24 V which are correct.

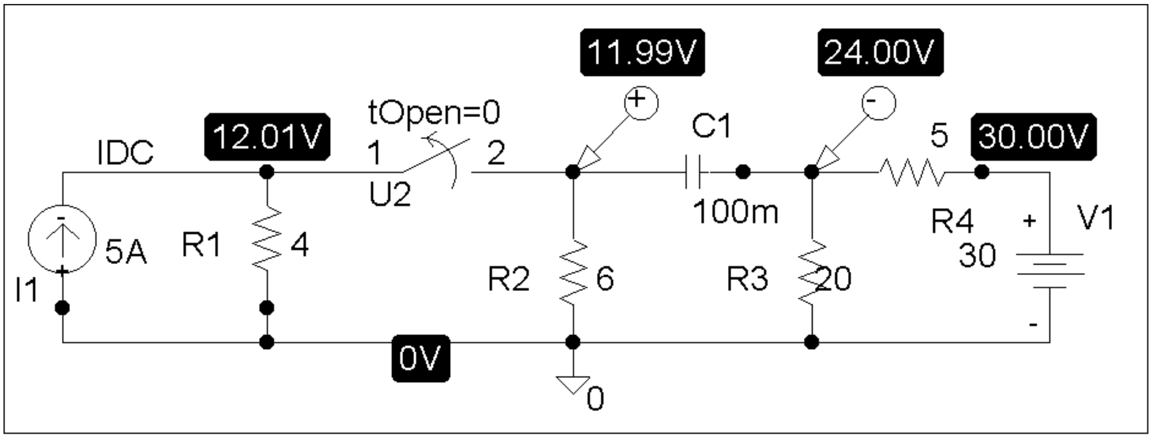

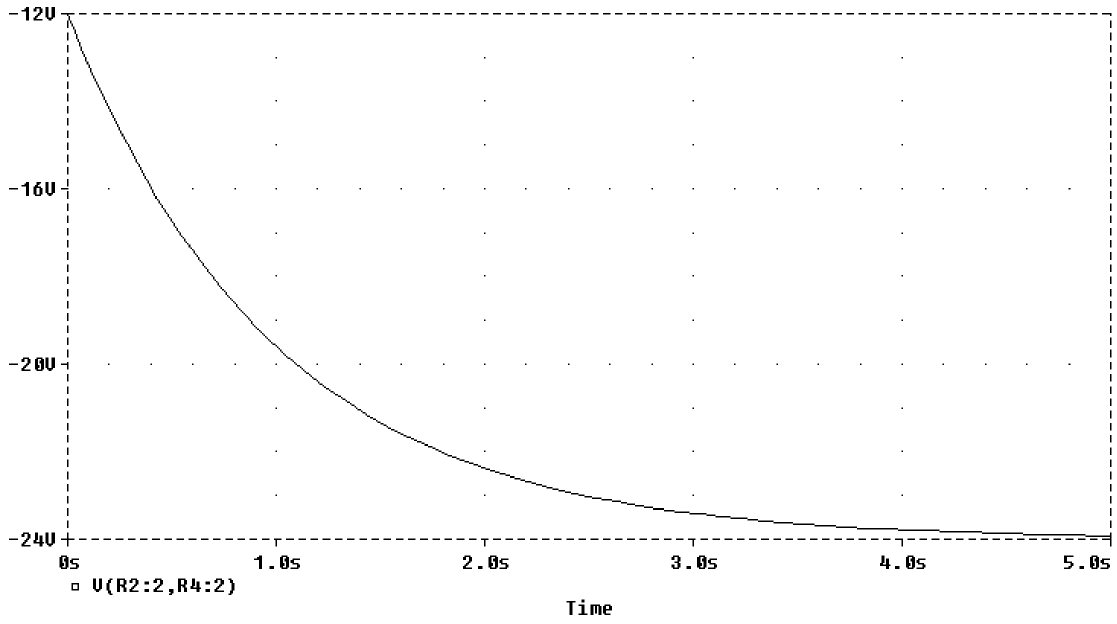

Chapter 7, Solution 78.

(a) When the switch is in position (a), the schematic is shown below. We insert IPROBE to display i. After simulation, we obtain,

$$i(0) = 7.714 \text{ A}$$

from the display of IPROBE.

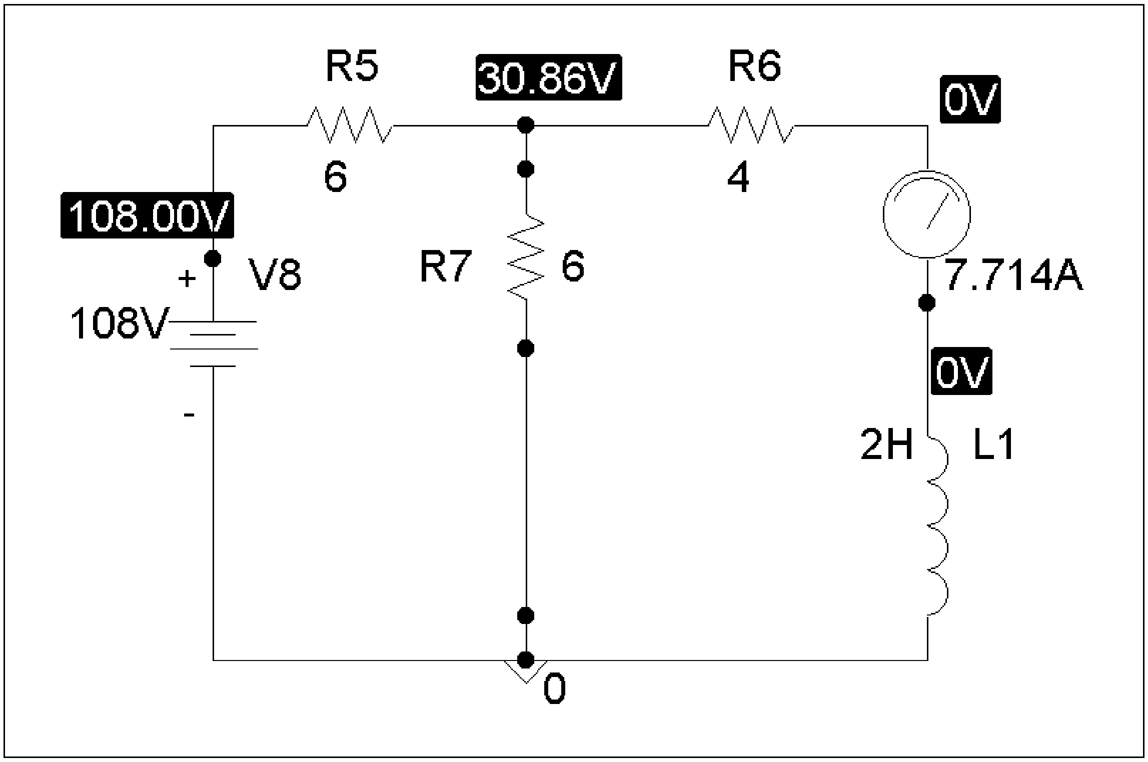

(b) When the switch is in position (b), the schematic is as shown below. For inductor I1, we let IC = 7.714. By clicking Analysis/Setup/Transient, we let Print Step = 25 ms and Final Step = 2 s. After Simulation, we click Trace/Add in the probe menu and display I(L1) as shown below. Note that $i(\infty)$ = 12A, which is correct.

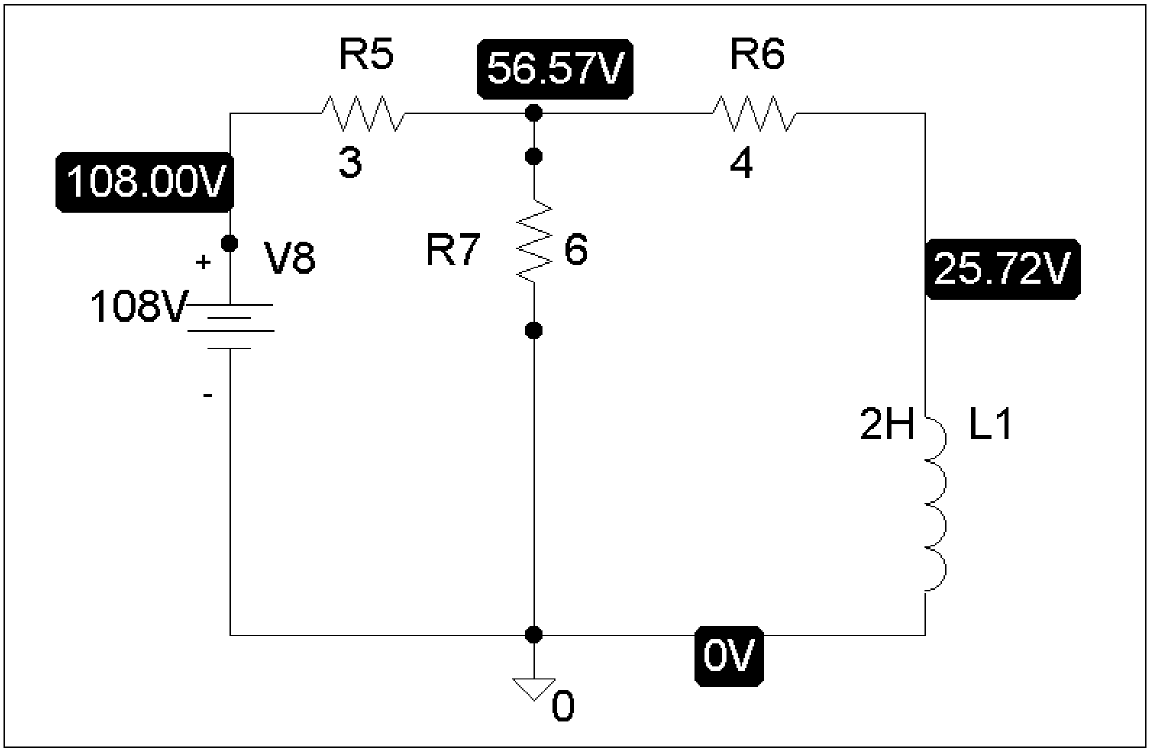
R5
56.57V
R6
108.00V
3
4
V8
R7
6
108V
25.72V
2H
L1
0V
0

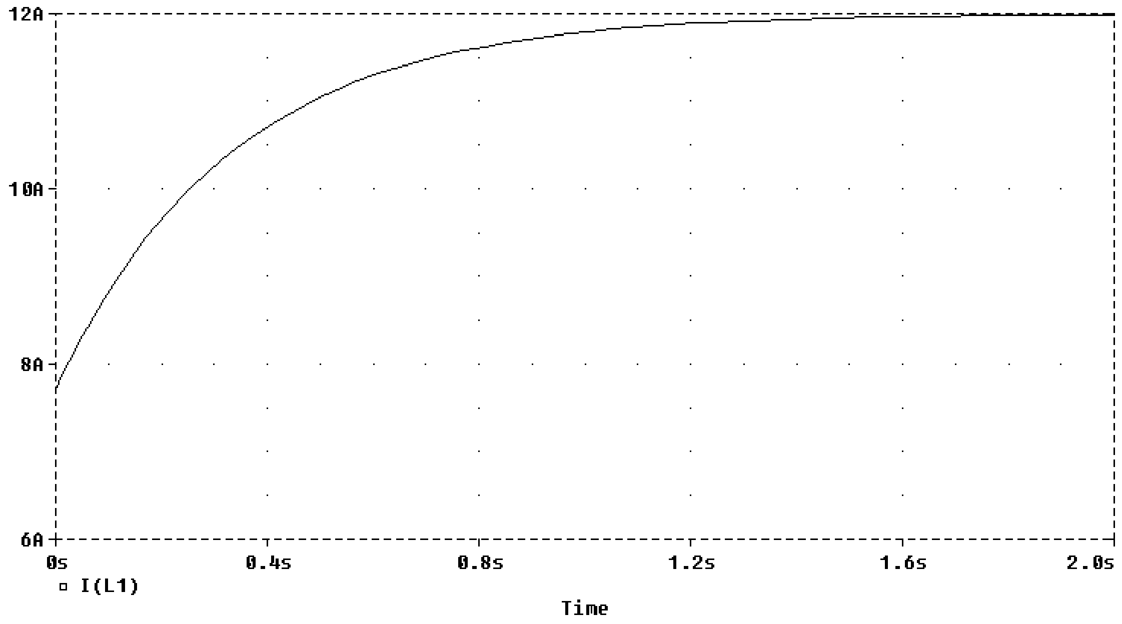
12A
10A
8A
6A
0s
0.4s
0.8s
1.2s
1.6s
2.0s
I(L1)
Time

Chapter 7, Solution 79.

When the switch is in position 1, $i_o(0) = 12/3 = 4$A. When the switch is in position 2,

$$i_o(\infty) = -\frac{4}{5+3} = -0.5 \text{ A}, \qquad R_{Th} = (3+5)//4 = 8/3, \qquad \tau = \frac{R_{Th}}{L} = 80/3$$

$$i_o(t) = i_o(\infty) + [i_o(0) - i_o(\infty)]e^{-t/\tau} = \underline{-0.5 + 4.5e^{-3t/80}} \text{ A}$$

Chapter 7, Solution 80.

(a) When the switch is in position A, the 5-ohm and 6-ohm resistors are short-circuited so that

$$\underline{i_1(0) = \quad i_2(0) = v_o(0) = 0}$$

but the current through the 4-H inductor is $i_L(0) = 30/10 = 3$A.

(b) When the switch is in position B,

$$R_{Th} = 3//6 = 2\Omega, \qquad \tau = \frac{R_{Th}}{L} = 2/4 = 0.5$$

$$i_L(t) = i_L(\infty) + [i_L(0) - i_L(\infty)]e^{-t/\tau} = 0 + 3e^{-t/0.5} = \underline{3e^{-2t} \text{ A}}$$

(c) $i_1(\infty) = \dfrac{30}{10+5} = \underline{2 \text{ A}}, \qquad i_2(\infty) = -\dfrac{3}{9} i_L(\infty) = \underline{0 \text{ A}}$

$$v_o(t) = L\frac{di_L}{dt} \quad \longrightarrow \quad \underline{v_o(\infty) = 0 \text{ V}}$$

Chapter 7, Solution 81.

The schematic is shown below. We use VPWL for the pulse and specify the attributes as shown. In the Analysis/Setup/Transient menu, we select Print Step = 25 ms and final Step = 3 S. By inserting a current marker at one termial of LI, we automatically obtain the plot of i after simulation as shown below.

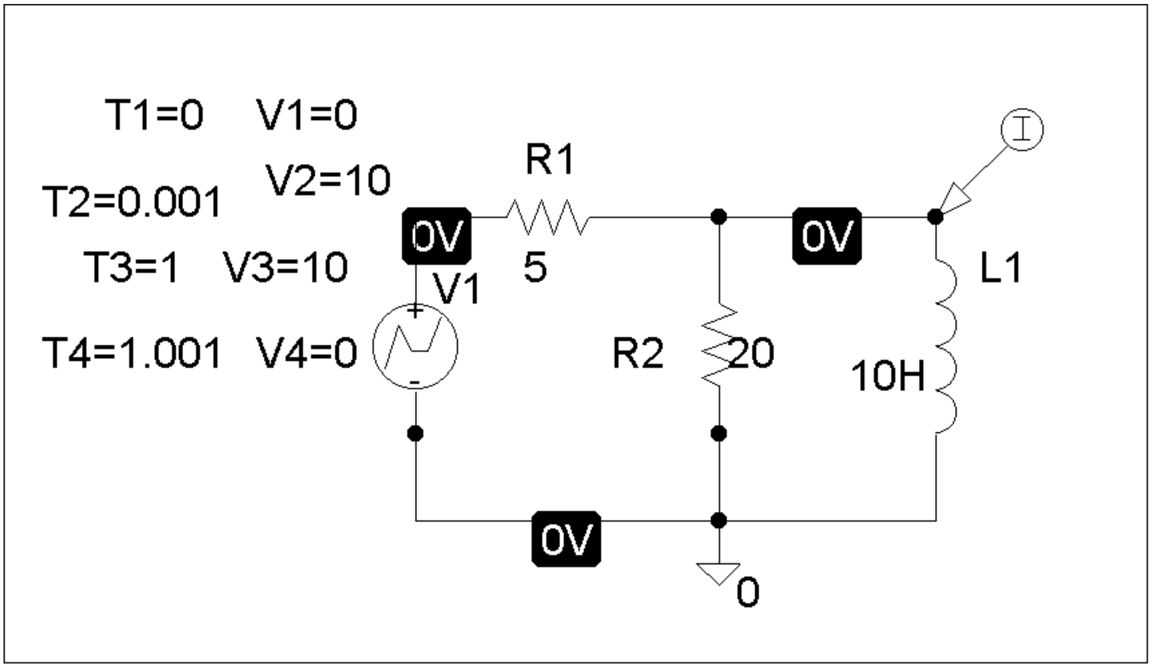

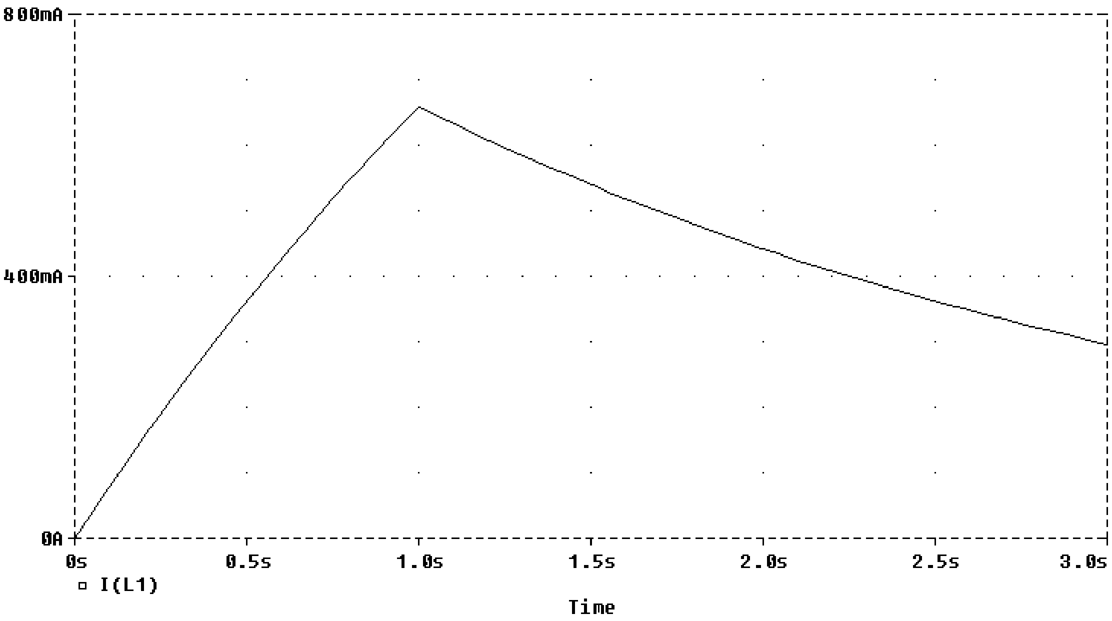

Chapter 7, Solution 82.

$$\tau = RC \longrightarrow R = \frac{\tau}{C} = \frac{3\times10^{-3}}{100\times10^{-6}} = \underline{\mathbf{30\ \Omega}}$$

Chapter 7, Solution 83.

$$v(\infty) = 120, \qquad v(0) = 0, \qquad \tau = RC = 34x10^6 x15x10^{-6} = 510s$$

$$v(t) = v(\infty) + [v(0) - v(\infty)]e^{-t/\tau} \quad \longrightarrow \quad 85.6 = 120(1 - e^{-t/510})$$

Solving for t gives

$$t = 510\ln 3.488 = 637.16s$$

speed = 4000m/637.16s = <u>6.278m/s</u>

Chapter 7, Solution 84.

Let I_o be the final value of the current. Then

$$i(t) = I_o(1 - e^{-t/\tau}), \qquad \tau = R/L = 0.16/8 = 1/50$$

$$0.6I_o = I_o(1 - e^{-50t}) \quad \longrightarrow \quad t = \frac{1}{50}\ln\frac{1}{0.4} = \underline{18.33\,\text{ms}}.$$

Chapter 7, Solution 85.

(a) $\tau = \text{RC} = (4\times10^6)(6\times10^{-6}) = 24\text{ s}$

Since $v(t) = v(\infty) + [\,v(0) - v(\infty)\,]\, e^{-t/\tau}$

$$v(t_1) - v(\infty) = [\,v(0) - v(\infty)\,]\, e^{-t_1/\tau} \qquad (1)$$

$$v(t_2) - v(\infty) = [\,v(0) - v(\infty)\,]\, e^{-t_2/\tau} \qquad (2)$$

Dividing (1) by (2),

$$\frac{v(t_1) - v(\infty)}{v(t_2) - v(\infty)} = e^{(t_2 - t_1)/\tau}$$

$$t_0 = t_2 - t_1 = \tau\ln\left(\frac{v(t_1) - v(\infty)}{v(t_2) - v(\infty)}\right)$$

$$t_0 = 24\ln\left(\frac{75 - 120}{30 - 120}\right) = 24\ln(2) = \underline{\mathbf{16.63\ s}}$$

(b) Since $t_0 < t$, the light flashes repeatedly every

$$\tau = \text{RC} = \underline{\mathbf{24\ s}}$$

Chapter 7, Solution 86.

$$v(t) = v(\infty) + \left[v(0) - v(\infty) \right] e^{-t/\tau}$$

$$v(\infty) = 12, \qquad v(0) = 0$$

$$v(t) = 12\left(1 - e^{-t/\tau}\right)$$

$$v(t_0) = 8 = 12\left(1 - e^{-t_0/\tau}\right)$$

$$\frac{8}{12} = 1 - e^{-t_0/\tau} \quad \longrightarrow \quad e^{-t_0/\tau} = \frac{1}{3}$$

$$t_0 = \tau \ln(3)$$

For $R = 100\ \text{k}\Omega$,

$$\tau = RC = (100 \times 10^3)(2 \times 10^{-6}) = 0.2\ \text{s}$$

$$t_0 = 0.2 \ln(3) = 0.2197\ \text{s}$$

For $R = 1\ \text{M}\Omega$,

$$\tau = RC = (1 \times 10^6)(2 \times 10^{-6}) = 2\ \text{s}$$

$$t_0 = 2 \ln(3) = 2.197\ \text{s}$$

Thus,

$$\mathbf{0.2197\ s < t_0 < 2.197\ s}$$

Chapter 7, Solution 87.

Let i be the inductor current.

For t < 0, $\quad i(0^-) = \dfrac{120}{100} = 1.2\ \text{A}$

For t > 0, we have an RL circuit

$$\tau = \frac{L}{R} = \frac{50}{100 + 400} = 0.1, \qquad i(\infty) = 0$$

$$i(t) = i(\infty) + \left[i(0) - i(\infty) \right] e^{-t/\tau}$$

$$i(t) = 1.2 e^{-10t}$$

At t = 100 ms = 0.1 s,

$$i(0.1) = 1.2 e^{-1} = \mathbf{0.441\ A}$$

which is the same as the current through the resistor.

Chapter 7, Solution 88.

(a) $\tau = RC = (300 \times 10^3)(200 \times 10^{-12}) = 60\ \mu s$

As a differentiator,

$$T > 10\tau = 600\ \mu s = 0.6\ ms$$

i.e. $T_{min} = \underline{\mathbf{0.6\ ms}}$

(b) $\tau = RC = 60\ \mu s$

As an integrator,

$$T < 0.1\tau = 6\ \mu s$$

i.e. $T_{max} = \underline{\mathbf{6\ \mu s}}$

Chapter 7, Solution 89.

Since $\tau < 0.1T = 1\ \mu s$

$$\frac{L}{R} < 1\ \mu s$$

$$L < R \times 10^{-6} = (200 \times 10^3)(1 \times 10^{-6})$$

$\underline{\mathbf{L < 200\ mH}}$

Chapter 7, Solution 90.

We determine the Thevenin equivalent circuit for the capacitor C_s.

$$v_{th} = \frac{R_s}{R_s + R_p} v_i, \qquad R_{th} = R_s \parallel R_p$$

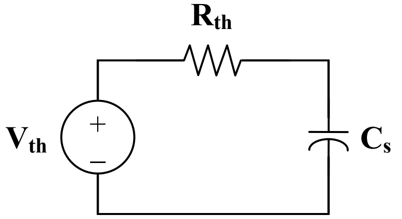

The Thevenin equivalent is an RC circuit. Since

$$v_{th} = \frac{1}{10} v_i \longrightarrow \frac{1}{10} = \frac{R_s}{R_s + R_p}$$

$$R_s = \frac{1}{9} R_p = \frac{6}{9} = \underline{\mathbf{\frac{2}{3}\ M\Omega}}$$

Also,

$$\tau = R_{th}C_s = 15\ \mu s$$

where $R_{th} = R_p \parallel R_s = \dfrac{6(2/3)}{6 + 2/3} = 0.6\ M\Omega$

$$C_s = \frac{\tau}{R_{th}} = \frac{15 \times 10^{-6}}{0.6 \times 10^{6}} = \underline{\mathbf{25\ pF}}$$

Chapter 7, Solution 91.

$$i_o(0) = \frac{12}{50} = 240\ mA, \qquad i(\infty) = 0$$

$$i(t) = i(\infty) + \left[\, i(0) - i(\infty)\right] e^{-t/\tau}$$

$$i(t) = 240\, e^{-t/\tau}$$

$$\tau = \frac{L}{R} = \frac{2}{R}$$

$$i(t_0) = 10 = 240\, e^{-t_0/\tau}$$

$$e^{t_0/\tau} = 24 \longrightarrow t_0 = \tau \ln(24)$$

$$\tau = \frac{t_0}{\ln(24)} = \frac{5}{\ln(24)} = 1.573 = \frac{2}{R}$$

$$R = \frac{2}{1.573} = \underline{\mathbf{1.271\ \Omega}}$$

Chapter 7, Solution 92.

$$i = C\frac{dv}{dt} = 4 \times 10^{-9} \cdot \begin{cases} \dfrac{10}{2 \times 10^{-3}} & 0 < t < t_R \\ \dfrac{-10}{5 \times 10^{-6}} & t_R < t < t_D \end{cases}$$

$$i(t) = \begin{cases} 20\ \mu A & 0 < t < 2\ ms \\ -8\ mA & 2\ ms < t < 2\ ms + 5\ \mu s \end{cases}$$

which is sketched below.

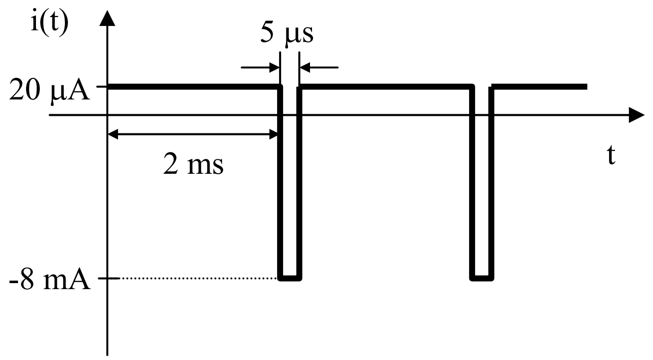

(not to scale)

Chapter 8, Solution 1.

(a) At $t = 0-$, the circuit has reached steady state so that the equivalent circuit is shown in Figure (a).

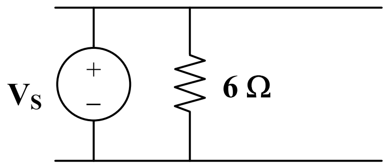

(a)

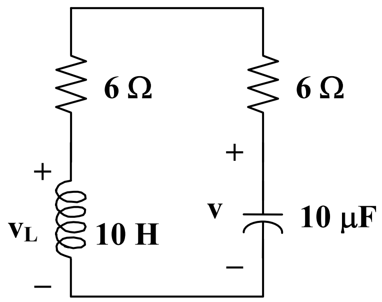

(b)

$$i(0-) = 12/6 = 2A, \quad v(0-) = 12V$$

At $t = 0+$, $i(0+) = i(0-) =$ **2A**, $v(0+) = v(0-) =$ **12V**

(b) For $t > 0$, we have the equivalent circuit shown in Figure (b).

$$v_L = Ldi/dt \text{ or } di/dt = v_L/L$$

Applying KVL at $t = 0+$, we obtain,

$$v_L(0+) - v(0+) + 10i(0+) = 0$$

$$v_L(0+) - 12 + 20 = 0, \text{ or } v_L(0+) = -8$$

Hence, $di(0+)/dt = -8/2 =$ **-4 A/s**

Similarly, $i_C = Cdv/dt$, or $dv/dt = i_C/C$

$$i_C(0+) = -i(0+) = -2$$

$$dv(0+)/dt = -2/0.4 = \text{-5 V/s}$$

(c) As t approaches infinity, the circuit reaches steady state.

$$i(\infty) = \text{0 A}, \quad v(\infty) = \text{0 V}$$

Chapter 8, Solution 2.

(a) At t = 0-, the equivalent circuit is shown in Figure (a).

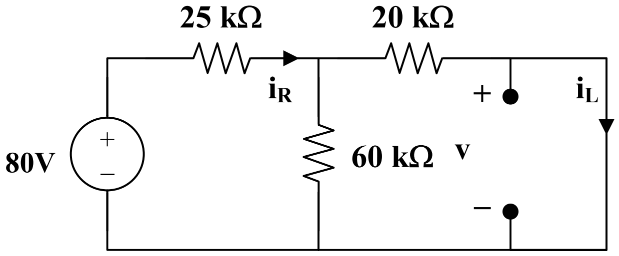

(a)

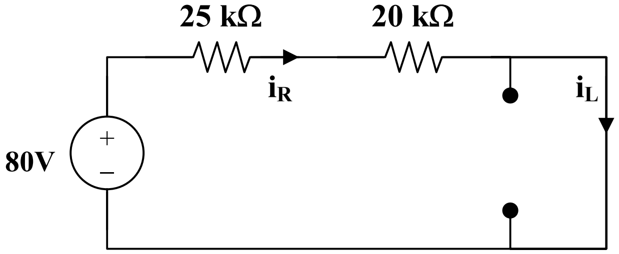

(b)

$$60||20 = 15 \text{ kohms}, \; i_R(0\text{-}) = 80/(25 + 15) = 2\text{mA}.$$

By the current division principle,

$$i_L(0\text{-}) = 60(2\text{mA})/(60 + 20) = 1.5 \text{ mA}$$

$$v_C(0\text{-}) = 0$$

At t = 0+,

$$v_C(0+) = v_C(0\text{-}) = 0$$

$$i_L(0+) = i_L(0\text{-}) = \underline{\mathbf{1.5\ mA}}$$

$$80 = i_R(0+)(25 + 20) + v_C(0\text{-})$$

$$i_R(0+) = 80/45\text{k} = \underline{\mathbf{1.778\ mA}}$$

But,

$$i_R = i_C + i_L$$

$$1.778 = i_C(0+) + 1.5 \text{ or } i_C(0+) = \underline{\mathbf{0.278\ mA}}$$

(b) $v_L(0+) = v_C(0+) = 0$

But, $v_L = Ldi_L/dt$ and $di_L(0+)/dt = v_L(0+)/L = 0$

$di_L(0+)/dt = \underline{\mathbf{0}}$

Again, $80 = 45i_R + v_C$

$0 = 45di_R/dt + dv_C/dt$

But, $dv_C(0+)/dt = i_C(0+)/C = 0.278$ mohms/1 μF = 278 V/s

Hence, $di_R(0+)/dt = (-1/45)dv_C(0+)/dt = -278/45$

$di_R(0+)/dt = $ **-6.1778 A/s**

Also, $i_R = i_C + i_L$

$di_R(0+)/dt = di_C(0+)/dt + di_L(0+)/dt$

$-6.1788 = di_C(0+)/dt + 0$, or $di_C(0+)/dt = $ **-6.1788 A/s**

(c) As t approaches infinity, we have the equivalent circuit in Figure (b).

$i_R(\infty) = i_L(\infty) = 80/45k = $ **1.778 mA**

$i_C(\infty) = Cdv(\infty)/dt = \underline{\mathbf{0}}$.

Chapter 8, Solution 3.

At $t = 0^-$, $u(t) = 0$. Consider the circuit shown in Figure (a). $i_L(0^-) = 0$, and $v_R(0^-) = 0$. But, $-v_R(0^-) + v_C(0^-) + 10 = 0$, or $v_C(0^-) = -10V$.

(a) At $t = 0^+$, since the inductor current and capacitor voltage cannot change abruptly, the inductor current must still be equal to **0A**, the capacitor has a voltage equal to **–10V**. Since it is in series with the +10V source, together they represent a direct short at $t = 0^+$. This means that the entire 2A from the current source flows through the capacitor and not the resistor. Therefore, $v_R(0^+) = $ **0 V**.

(b) At $t = 0^+$, $v_L(0+) = 0$, therefore $Ldi_L(0+)/dt = v_L(0^+) = 0$, thus, $di_L/dt = $ **0A/s**, $i_C(0^+) = 2$ A, this means that $dv_C(0^+)/dt = 2/C = $ **8 V/s**. Now for the value of $dv_R(0^+)/dt$. Since $v_R = v_C + 10$, then $dv_R(0^+)/dt = dv_C(0^+)/dt + 0 = $ **8 V/s**.

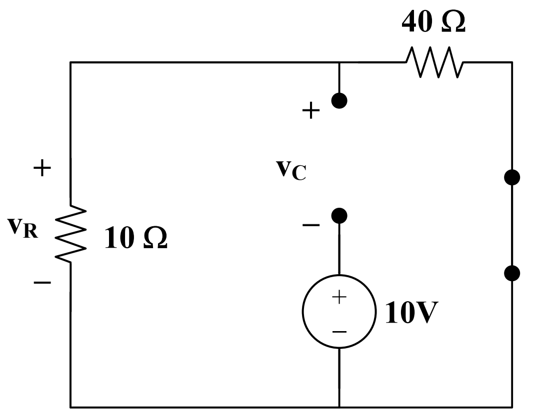

(a)

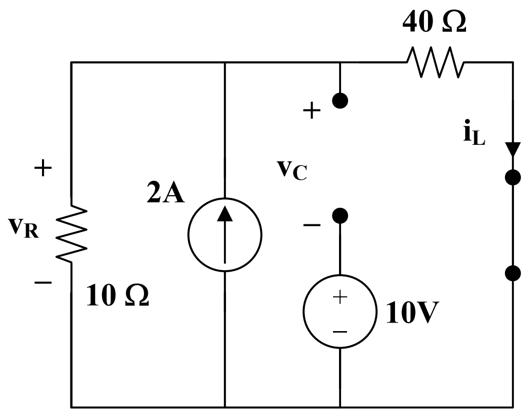

(b)

(c) As t approaches infinity, we end up with the equivalent circuit shown in Figure (b).

$$i_L(\infty) = 10(2)/(40 + 10) = \underline{\mathbf{400\ mA}}$$

$$v_C(\infty) = 2[10||40] - 10 = 16 - 10 = \underline{\mathbf{6V}}$$

$$v_R(\infty) = 2[10||40] = \underline{\mathbf{16\ V}}$$

Chapter 8, Solution 4.

(a) At $t = 0^-$, $u(-t) = 1$ and $u(t) = 0$ so that the equivalent circuit is shown in Figure (a).

$$i(0^-) = 40/(3 + 5) = 5A, \text{ and } v(0^-) = 5i(0^-) = 25V.$$

Hence, $i(0^+) = i(0^-) = \underline{\mathbf{5A}}$

$$v(0^+) = v(0^-) = \underline{\mathbf{25V}}$$

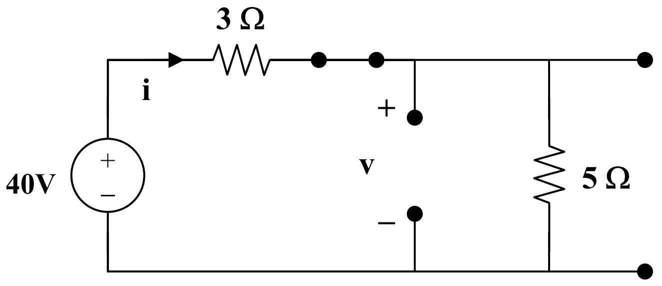

(a)

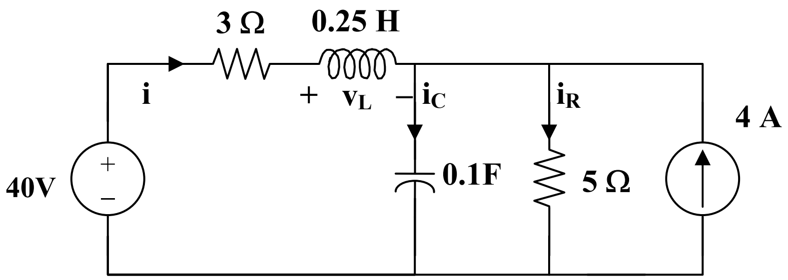

(b)

(b) $i_C = Cdv/dt$ or $dv(0^+)/dt = i_C(0^+)/C$

For $t = 0^+$, $4u(t) = 4$ and $4u(-t) = 0$. The equivalent circuit is shown in Figure (b). Since i and v cannot change abruptly,

$$i_R = v/5 = 25/5 = 5A,\ i(0^+) + 4 = i_C(0^+) + i_R(0^+)$$

$$5 + 4 = i_C(0^+) + 5 \text{ which leads to } i_C(0^+) = 4$$

$$dv(0^+)/dt = 4/0.1 = \underline{\mathbf{40\ V/s}}$$

Chapter 8, Solution 5.

(a) For $t < 0$, $4u(t) = 0$ so that the circuit is not active (all initial conditions = 0).

$$i_L(0-) = 0 \text{ and } v_C(0-) = 0.$$

For $t = 0+$, $4u(t) = 4$. Consider the circuit below.

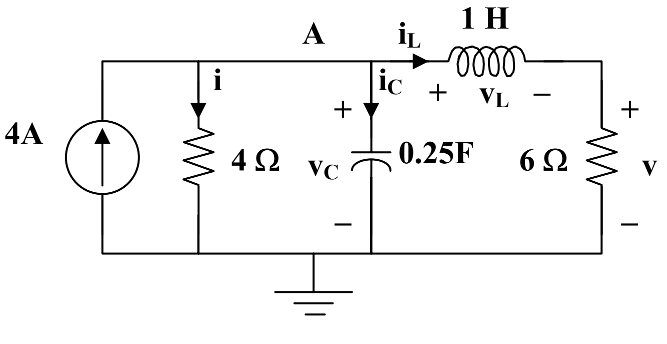

Since the 4-ohm resistor is in parallel with the capacitor,

$$i(0+) = v_C(0+)/4 = 0/4 = \underline{\mathbf{0\ A}}$$

Also, since the 6-ohm resistor is in series with the inductor,
$v(0+) = 6i_L(0+) = \underline{\mathbf{0V}}$.

(b) $di(0+)/dt = d(v_R(0+)/R)/dt = (1/R)dv_R(0+)/dt = (1/R)dv_C(0+)/dt$

$$= (1/4)4/0.25 \text{ A/s} = \underline{\textbf{4 A/s}}$$

$v = 6i_L$ or $dv/dt = 6di_L/dt$ and $dv(0+)/dt = 6di_L(0+)/dt = 6v_L(0+)/L = 0$

$$\text{Therefore } dv(0+)/dt = \underline{\textbf{0 V/s}}$$

(c) As t approaches infinity, the circuit is in steady-state.

$$i(\infty) = 6(4)/10 = \underline{\textbf{2.4 A}}$$

$$v(\infty) = 6(4 - 2.4) = \underline{\textbf{9.6 V}}$$

Chapter 8, Solution 6.

(a) Let i = the inductor current. For $t < 0$, $u(t) = 0$ so that

$$i(0) = 0 \text{ and } v(0) = 0.$$

For $t > 0$, $u(t) = 1$. Since, $v(0+) = v(0-) = 0$, and $i(0+) = i(0-) = 0$.

$$v_R(0+) = Ri(0+) = \underline{\textbf{0 V}}$$

Also, since $v(0+) = v_R(0+) + v_L(0+) = 0 = 0 + v_L(0+)$ or $v_L(0+) = \underline{\textbf{0 V}}$.
(1)

(b) Since $i(0+) = 0$, $i_C(0+) = V_S/R_S$

But, $i_C = Cdv/dt$ which leads to $dv(0+)/dt = V_S/(CR_S)$ (2)

From (1), $dv(0+)/dt = dv_R(0+)/dt + dv_L(0+)/dt$ (3)
$v_R = iR$ or $dv_R/dt = Rdi/dt$ (4)

But, $v_L = Ldi/dt$, $v_L(0+) = 0 = Ldi(0+)/dt$ and $di(0+)/dt = 0$ (5)

From (4) and (5), $dv_R(0+)/dt = \underline{\textbf{0 V/s}}$

From (2) and (3), $dv_L(0+)/dt = dv(0+)/dt = \underline{\mathbf{V_s/(CR_s)}}$

(c) As t approaches infinity, the capacitor acts like an open circuit, while the inductor acts like a short circuit.

$$v_R(\infty) = \underline{\mathbf{[R/(R + R_s)]V_s}}$$

$$v_L(\infty) = \underline{\textbf{0 V}}$$

Chapter 8, Solution 7.

$$s^2 + 4s + 4 = 0, \text{ thus } s_{1,2} = \frac{-4 \pm \sqrt{4^2 - 4x4}}{2} = -2, \text{ repeated roots.}$$

$$v(t) = [(A + Bt)e^{-2t}], \ v(0) = 1 = A$$

$$dv/dt = [Be^{-2t}] + [-2(A + Bt)e^{-2t}]$$

$$dv(0)/dt = -1 = B - 2A = B - 2 \text{ or } B = 1.$$

Therefore, $v(t) =$ **[(1 + t)e^{-2t}] V**

Chapter 8, Solution 8.

$s^2 + 6s + 9 = 0$, thus $s_{1,2} = \frac{-6 \pm \sqrt{6^2 - 36}}{2} = -3$, repeated roots.

$$i(t) = [(A + Bt)e^{-3t}], \ i(0) = 0 = A$$

$$di/dt = [Be^{-3t}] + [-3(Bt)e^{-3t}]$$

$$di(0)/dt = 4 = B.$$

Therefore, $i(t) =$ **[4te^{-3t}] A**

Chapter 8, Solution 9.

$$s^2 + 10s + 25 = 0, \text{ thus } s_{1,2} = \frac{-10 \pm \sqrt{10 - 10}}{2} = -5, \text{ repeated roots.}$$

$$i(t) = [(A + Bt)e^{-5t}], \ i(0) = 10 = A$$

$$di/dt = [Be^{-5t}] + [-5(A + Bt)e^{-5t}]$$

$$di(0)/dt = 0 = B - 5A = B - 50 \text{ or } B = 50.$$

Therefore, $i(t) =$ **[(10 + 50t)e^{-5t}] A**

Chapter 8, Solution 10.

$$s^2 + 5s + 4 = 0, \text{ thus } s_{1,2} = \frac{-5 \pm \sqrt{25-16}}{2} = -4, -1.$$

$$v(t) = (Ae^{-4t} + Be^{-t}), \; v(0) = 0 = A + B, \text{ or } B = -A$$

$$dv/dt = (-4Ae^{-4t} - Be^{-t})$$

$$dv(0)/dt = 10 = -4A - B = -3A \text{ or } A = -10/3 \text{ and } B = 10/3.$$

Therefore, $v(t) =$ **$\underline{(-(10/3)e^{-4t} + (10/3)e^{-t})\ V}$**

Chapter 8, Solution 11.

$$s^2 + 2s + 1 = 0, \text{ thus } s_{1,2} = \frac{-2 \pm \sqrt{4-4}}{2} = -1, \text{ repeated roots.}$$

$$v(t) = [(A + Bt)e^{-t}], \; v(0) = 10 = A$$

$$dv/dt = [Be^{-t}] + [-(A + Bt)e^{-t}]$$

$$dv(0)/dt = 0 = B - A = B - 10 \text{ or } B = 10.$$

Therefore, $v(t) =$ **$\underline{[(10 + 10t)e^{-t}]\ V}$**

Chapter 8, Solution 12.

(a) Overdamped when $C > 4L/(R^2) = 4x0.6/400 = 6x10^{-3}$, or $C >$ **<u>6 mF</u>**

(b) Critically damped when $C =$ **<u>6 mF</u>**

(c) Underdamped when $C <$ **<u>6mF</u>**

Chapter 8, Solution 13.

Let R||60 = R_o. For a series RLC circuit,

$$\omega_o = \frac{1}{\sqrt{LC}} = \frac{1}{\sqrt{0.01x4}} = 5$$

For critical damping, $\omega_o = \alpha = R_o/(2L) = 5$

or $R_o = 10L = 40 = 60R/(60 + R)$

which leads to R = **<u>120 ohms</u>**

Chapter 8, Solution 14.

This is a series, source-free circuit. 60||30 = 20 ohms

$$\alpha = R/(2L) = 20/(2x2) = 5 \text{ and } \omega_o = \frac{1}{\sqrt{LC}} = \frac{1}{\sqrt{0.04}} = 5$$

$\omega_o = \alpha$ leads to critical damping

$i(t) = [(A + Bt)e^{-5t}],\ i(0) = 2 = A$

$v = Ldi/dt = 2\{[Be^{-5t}] + [-5(A + Bt)e^{-5t}]\}$

$v(0) = 6 = 2B - 10A = 2B - 20$ or $B = 13.$

Therefore, $i(t) = \underline{\mathbf{[(2 + 13t)e^{-5t}]\ A}}$

Chapter 8, Solution 15.

This is a series, source-free circuit. 60||30 = 20 ohms

$$\alpha = R/(2L) = 20/(2x2) = 5 \text{ and } \omega_o = \frac{1}{\sqrt{LC}} = \frac{1}{\sqrt{0.04}} = 5$$

$\omega_o = \alpha$ leads to critical damping

$i(t) = [(A + Bt)e^{-5t}],\ i(0) = 2 = A$

$v = Ldi/dt = 2\{[Be^{-5t}] + [-5(A + Bt)e^{-5t}]\}$

$v(0) = 6 = 2B - 10A = 2B - 20$ or $B = 13.$

Therefore, $i(t) = \underline{\mathbf{[(2 + 13t)e^{-5t}]\ A}}$

Chapter 8, Solution 16.

At t = 0, i(0) = 0, $v_C(0)$ = 40x30/50 = 24V

For t > 0, we have a source-free RLC circuit.

$$\alpha = R/(2L) = (40 + 60)/5 = 20 \text{ and } \omega_o = \frac{1}{\sqrt{LC}} = \frac{1}{\sqrt{10^{-3} x2.5}} = 20$$

$\omega_o = \alpha$ leads to critical damping

$$i(t) = [(A + Bt)e^{-20t}],\ i(0) = 0 = A$$

$$di/dt = \{[Be^{-20t}] + [-20(Bt)e^{-20t}]\},$$

$$\text{but } di(0)/dt = -(1/L)[Ri(0) + v_C(0)] = -(1/2.5)[0 + 24]$$

Hence, B = -9.6 or i(t) = **$[-9.6te^{-20t}]$ A**

Chapter 8, Solution 17.

$$i(0) = I_0 = 0,\ v(0) = V_0 = 4x15 = 60$$

$$\frac{di(0)}{dt} = -\frac{1}{L}(RI_0 + V_0) = -4(0 + 60) = -240$$

$$\omega_o = \frac{1}{\sqrt{LC}} = \frac{1}{\sqrt{\frac{1}{4}\frac{1}{25}}} = 10$$

$$\alpha = \frac{R}{2L} = \frac{10}{2\frac{1}{4}} = 20, \text{ which is} > \omega_o.$$

$$s = -\alpha \pm \sqrt{\alpha^2 - \omega_o^2} = -20 \pm \sqrt{300} = -20 \pm 10\sqrt{3} = -2.68, -37.32$$

$$i(t) = A_1 e^{-2.68t} + A_2 e^{-37.32t}$$

$$i(0) = 0 = A_1 + A_2,\ \frac{di(0)}{dt} = -2.68A_1 - 37.32A_2 = -240$$

$$\text{This leads to } A_1 = -6.928 = -A_2$$

$$i(t) = 6.928\left(e^{-37.32t} - e^{-268t}\right)$$

$$\text{Since, } v(t) = \frac{1}{C}\int_0^t i(t)dt + 60, \text{ we get}$$

v(t) = **$(60 + 64.53e^{-2.68t} - 4.6412e^{-37.32t})$ V**

Chapter 8, Solution 18.

When the switch is off, we have a source-free parallel RLC circuit.

$$\omega_o = \frac{1}{\sqrt{LC}} = \frac{1}{\sqrt{0.25x1}} = 2, \qquad \alpha = \frac{1}{2RC} = 0.5$$

$\alpha < \omega_o \quad \longrightarrow \quad$ underdamped case $\quad \omega_d = \sqrt{\omega_o^2 - \alpha^2} = \sqrt{4 - 0.25} = 1.936$

$I_o(0)$ = i(0) = initial inductor current = 20/5 = 4A

$V_o(0)$ = v(0) = initial capacitor voltage = 0 V

$$v(t) = e^{-\alpha t}(A_1 \cos\omega_d t + A_2 \sin\omega_d t) = e^{-0.5\alpha t}(A_1 \cos 1.936t + A_2 \sin 1.936t)$$

v(0) =0 = A_1

$$\frac{dv}{dt} = e^{-0.5\alpha t}(-0.5)(A_1 \cos 1.936t + A_2 \sin 1.936t) + e^{-0.5\alpha t}(-1.936A_1 \sin 1.936t + 1.936A_2 \cos 1.936t)$$

$$\frac{dv(0)}{dt} = -\frac{(V_o + RI_o)}{RC} = -\frac{(0+4)}{1} = -4 = -0.5A_1 + 1.936A_2 \quad \longrightarrow \quad A_2 = -2.066$$

Thus,

$$\underline{v(t) = -2.066e^{-0.5t} \sin 1.936t}$$

Chapter 8, Solution 19.

For t < 0, the equivalent circuit is shown in Figure (a).

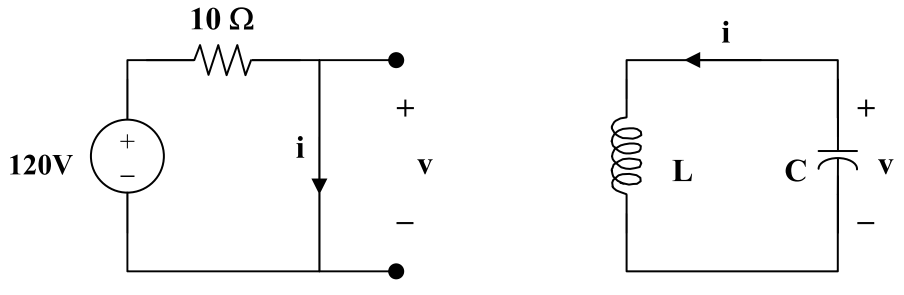

(a) (b)

i(0) = 120/10 = 12, v(0) = 0

For $t > 0$, we have a series RLC circuit as shown in Figure (b) with $R = 0 = \alpha$.

$$\omega_o = \frac{1}{\sqrt{LC}} = \frac{1}{\sqrt{4}} = 0.5 = \omega_d$$

$$i(t) = [A\cos 0.5t + B\sin 0.5t], \quad i(0) = 12 = A$$

$$v = -Ldi/dt, \text{ and } -v/L = di/dt = 0.5[-12\sin 0.5t + B\cos 0.5t],$$

which leads to $-v(0)/L = 0 = B$

Hence, $\quad i(t) = 12\cos 0.5t$ A and $v = 0.5$

However, $v = -Ldi/dt = -4(0.5)[-12\sin 0.5t] =$ **<u>24sin0.5t V</u>**

Chapter 8, Solution 20.

For $t < 0$, the equivalent circuit is as shown below.

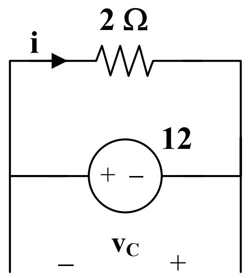

$$v(0) = -12\text{V} \text{ and } i(0) = 12/2 = 6\text{A}$$

For $t > 0$, we have a series RLC circuit.

$$\alpha = R/(2L) = 2/(2x0.5) = 2$$

$$\omega_o = 1/\sqrt{LC} = 1/\sqrt{0.5x1/4} = 2\sqrt{2}$$

Since α is less than ω_o, we have an under-damped response.

$$\omega_d = \sqrt{\omega_o^2 - \alpha^2} = \sqrt{8-4} = 2$$

$$i(t) = (A\cos 2t + B\sin 2t)e^{-2t}$$

$$i(0) = 6 = A$$

$$di/dt = -2(6\cos 2t + B\sin 2t)e^{-2t} + (-2x6\sin 2t + 2B\cos 2t)e^{-\alpha t}$$

$$di(0)/dt = -12 + 2B = -(1/L)[Ri(0) + v_C(0)] = -2[12 - 12] = 0$$

Thus, B = 6 and $i(t) =$ $\underline{\mathbf{(6\cos 2t + 6\sin 2t)e^{-2t}\ A}}$

Chapter 8, Solution 21.

By combining some resistors, the circuit is equivalent to that shown below.
60||(15 + 25) = 24 ohms.

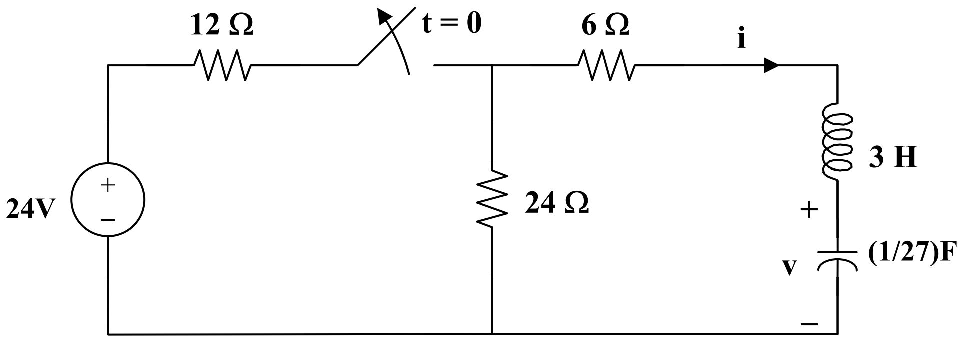

At t = 0-, i(0) = 0, v(0) = 24x24/36 = 16V

For t > 0, we have a series RLC circuit. R = 30 ohms, L = 3 H, C = (1/27) F

$$\alpha = R/(2L) = 30/6 = 5$$

$\omega_o = 1/\sqrt{LC} = 1/\sqrt{3x1/27} = 3$, clearly $\alpha > \omega_o$ (overdamped response)

$$s_{1,2} = -\alpha \pm \sqrt{\alpha^2 - \omega_o^2} = -5 \pm \sqrt{5^2 - 3^2} = -9, -1$$

$v(t) = [Ae^{-t} + Be^{-9t}]$, $v(0) = 16 = A + B$ (1)

$i = Cdv/dt = C[-Ae^{-t} - 9Be^{-9t}]$

$i(0) = 0 = C[-A - 9B]$ or $A = -9B$ (2)

From (1) and (2), B = -2 and A = 18.

Hence, $v(t) =$ $\underline{\mathbf{(18e^{-t} - 2e^{-9t})\ V}}$

Chapter 8, Solution 22.

$\alpha = 20 = 1/(2RC)$ or $RC = 1/40$ (1)

$\omega_d = 50 = \sqrt{\omega_o^2 - \alpha^2}$ which leads to $2500 + 400 = \omega_o^2 = 1/(LC)$

Thus, LC 1/2900 (2)

In a parallel circuit, $v_C = v_L = v_R$

But, $i_C = Cdv_C/dt$ or $i_C/C = dv_C/dt$

$= -80e^{-20t}\cos 50t - 200e^{-20t}\sin 50t + 200e^{-20t}\sin 50t - 500e^{-20t}\cos 50t$
$= -580e^{-20t}\cos 50t$

$i_C(0)/C = -580$ which leads to $C = -6.5\text{x}10^{-3}/(-580) =$ **<u>11.21 μF</u>**

$R = 1/(40C) = 10^6/(2900\text{x}11.21) =$ **<u>2.23 kohms</u>**

$L = 1/(2900\text{x}11.21) =$ **<u>30.76 H</u>**

Chapter 8, Solution 23.

Let $C_o = C + 0.01$. For a parallel RLC circuit,

$\alpha = 1/(2RC_o)$, $\omega_o = 1/\sqrt{LC_o}$

$\alpha = 1 = 1/(2RC_o)$, we then have $C_o = 1/(2R) = 1/20 = 50$ mF

$\omega_o = 1/\sqrt{0.5\text{x}0.5} = 6.32 > \alpha$ (underdamped)

$C_o = C + 10$ mF $= 50$ mF or **<u>40 mF</u>**

Chapter 8, Solution 24.

For $t < 0$, u(-t) 1, namely, the switch is on.

$v(0) = 0$, $i(0) = 25/5 = 5$A

For $t > 0$, the voltage source is off and we have a source-free parallel RLC circuit.

$\alpha = 1/(2RC) = 1/(2\text{x}5\text{x}10^{-3}) = 100$

$$\omega_o = 1/\sqrt{LC} = 1/\sqrt{0.1x10^{-3}} = 100$$

$$\omega_o = \alpha \text{ (critically damped)}$$

$$v(t) = [(A_1 + A_2t)e^{-100t}]$$

$$v(0) = 0 = A_1$$

$$dv(0)/dt = -[v(0) + Ri(0)]/(RC) = -[0 + 5x5]/(5x10^{-3}) = -5000$$

But, $dv/dt = [(A_2 + (-100)A_2t)e^{-100t}]$

Therefore, $dv(0)/dt = -5000 = A_2 - 0$

$v(t) =$ <u>$\mathbf{-5000te^{-100t}}$ **V**</u>

Chapter 8, Solution 25.

In the circuit in Fig. 8.76, calculate $i_o(t)$ and $v_o(t)$ for t>0.

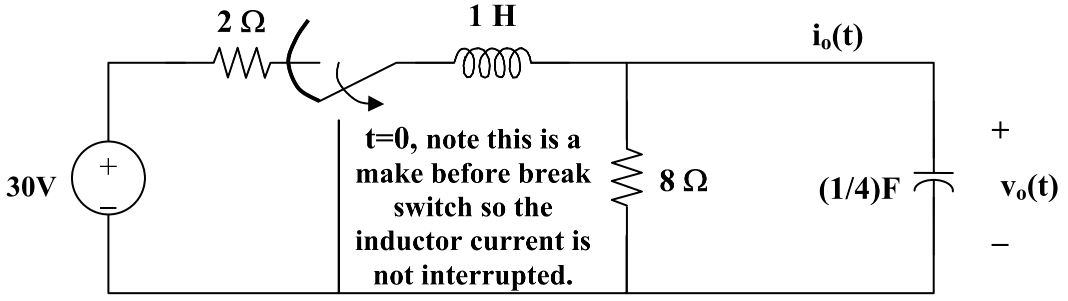

Figure 8.78 For Problem 8.25.

At t = 0⁻, $v_o(0) = (8/(2 + 8)(30) = 24$

For t > 0, we have a source-free parallel RLC circuit.

$$\alpha = 1/(2RC) = ¼$$

$$\omega_o = 1/\sqrt{LC} = 1/\sqrt{1x1/4} = 2$$

Since α is less than ω_o, we have an under-damped response.

$$\omega_d = \sqrt{\omega_o^2 - \alpha^2} = \sqrt{4 - (1/16)} = 1.9843$$

$$v_o(t) = (A_1\cos\omega_d t + A_2\sin\omega_d t)e^{-\alpha t}$$

$v_o(0) = 24 = A_1$ and $i_o(t) = C(dv_o/dt) = 0$ when $t = 0$.

$$dv_o/dt = -\alpha(A_1\cos\omega_d t + A_2\sin\omega_d t)e^{-\alpha t} + (-\omega_d A_1\sin\omega_d t + \omega_d A_2\cos\omega_d t)e^{-\alpha t}$$

at $t = 0$, we get $dv_o(0)/dt = 0 = -\alpha A_1 + \omega_d A_2$

Thus, $A_2 = (\alpha/\omega_d)A_1 = (1/4)(24)/1.9843 = 3.024$

$v_o(t) =$ **$(24\cos\omega_d t + 3.024\sin\omega_d t)e^{-t/4}$ volts**

Chapter 8, Solution 26.

$$s^2 + 2s + 5 = 0, \text{ which leads to } s_{1,2} = \frac{-2 \pm \sqrt{4 - 20}}{2} = -1 \pm j4$$

$$i(t) = I_s + [(A_1\cos 4t + A_2\sin 4t)e^{-t}], \ I_s = 10/5 = 2$$

$$i(0) = 2 = = 2 + A_1, \text{ or } A_1 = 0$$

$$di/dt = [(A_2\cos 4t)e^{-t}] + [(-A_2\sin 4t)e^{-t}] = 4 = 4A_2, \text{ or } A_2 = 1$$

$i(t) =$ **$2 + \sin 4te^{-t}$ A**

Chapter 8, Solution 27.

$$s^2 + 4s + 8 = 0 \text{ leads to } s = \frac{-4 \pm \sqrt{16 - 32}}{2} = -2 \pm j2$$

$$v(t) = V_s + (A_1\cos 2t + A_2\sin 2t)e^{-2t}$$

$8V_s = 24$ means that $V_s = 3$

$v(0) = 0 = 3 + A_1$ leads to $A_1 = -3$

$$dv/dt = -2(A_1\cos 2t + A_2\sin 2t)e^{-2t} + (-2A_1\sin 2t + 2A_2\cos 2t)e^{-2t}$$

$0 = dv(0)/dt = -2A_1 + 2A_2$ or $A_2 = A_1 = -3$

$v(t) =$ **$[3 - 3(\cos 2t + \sin 2t)e^{-2t}]$ volts**

Chapter 8, Solution 28.

The characteristic equation is $s^2 + 6s + 8$ with roots

$$s_{1,2} = \frac{-6 \pm \sqrt{36-32}}{2} = -4,-2$$

Hence,

$$i(t) = I_s + Ae^{-2t} + Be^{-4t}$$

$$8I_s = 12 \quad \longrightarrow \quad I_s = 1.5$$

$$i(0) = 0 \quad \longrightarrow \quad 0 = 1.5 + A + B \qquad (1)$$

$$\frac{di}{dt} = -2Ae^{-2t} - 4Be^{-4t}$$

$$\frac{di(0)}{dt} = 2 = -2A - 4B \quad \longrightarrow \quad 0 = 1 + A + 2B \qquad (2)$$

Solving (1) and (2) leads to A=-2 and B=0.5.

$$i(t) = \underline{1.5 - 2e^{-2t} + 0.5e^{-4t}} \text{ A}$$

Chapter 8, Solution 29.

(a) $s^2 + 4 = 0$ which leads to $s_{1,2} = \pm j2$ (an undamped circuit)

$$v(t) = V_s + A\cos 2t + B\sin 2t$$

$$4V_s = 12 \text{ or } V_s = 3$$

$$v(0) = 0 = 3 + A \text{ or } A = -3$$

$$dv/dt = -2A\sin 2t + 2B\cos 2t$$

$dv(0)/dt = 2 = 2B$ or $B = 1$, therefore $v(t) =$ **<u>(3 – 3cos2t + sin2t) V</u>**

(b) $s^2 + 5s + 4 = 0$ which leads to $s_{1,2} = -1, -4$

$$i(t) = (I_s + Ae^{-t} + Be^{-4t})$$

$$4I_s = 8 \text{ or } I_s = 2$$

$$i(0) = -1 = 2 + A + B, \text{ or } A + B = -3 \qquad (1)$$

$$di/dt = -Ae^{-t} - 4Be^{-4t}$$

$$di(0)/dt = 0 = -A - 4B, \text{ or } B = -A/4 \qquad (2)$$

From (1) and (2) we get A = -4 and B = 1

$$i(t) = \underline{\mathbf{(2 - 4e^{-t} + e^{-4t})\ A}}$$

(c) $s^2 + 2s + 1 = 0, \ s_{1,2} = -1, -1$

$$v(t) = [V_s + (A + Bt)e^{-t}], \ V_s = 3.$$

$$v(0) = 5 = 3 + A \text{ or } A = 2$$

$$dv/dt = [-(A + Bt)e^{-t}] + [Be^{-t}]$$

$$dv(0)/dt = -A + B = 1 \text{ or } B = 2 + 1 = 3$$

$$v(t) = \underline{\mathbf{[3 + (2 + 3t)e^{-t}]\ V}}$$

Chapter 8, Solution 30.

$$s_1 = -500 = -\alpha + \sqrt{\alpha^2 - \omega_o^2}, \qquad s_2 = -800 = -\alpha - \sqrt{\alpha^2 - \omega_o^2}$$

$$s_1 + s_2 = -1300 = -2\alpha \longrightarrow \alpha = 650 = \frac{R}{2L}$$

Hence,

$$L = \frac{R}{2\alpha} = \frac{200}{2x650} = \underline{153.8 \text{ mH}}$$

$$s_1 - s_2 = 300 = 2\sqrt{\alpha^2 - \omega_o^2} \longrightarrow \omega_o = 623.45 = \frac{1}{\sqrt{LC}}$$

$$C = \frac{1}{(632.45)^2 L} = \underline{16.25\mu\text{F}}$$

Chapter 8, Solution 31.

For t = 0-, we have the equivalent circuit in Figure (a). For t = 0+, the equivalent circuit is shown in Figure (b). By KVL,

$$v(0+) = v(0-) = 40, \; i(0+) = i(0-) = 1$$

By KCL, $2 = i(0+) + i_1 = 1 + i_1$ which leads to $i_1 = 1$. By KVL, $-v_L + 40i_1 + v(0+) = 0$ which leads to $v_L(0+) = 40x1 + 40 = 80$

$$v_L(0+) = \underline{\mathbf{80\ V}}, \quad v_C(0+) = \underline{\mathbf{40\ V}}$$

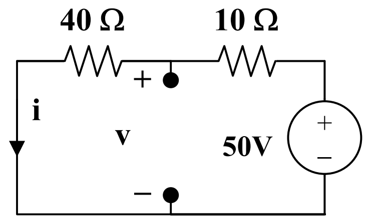

(a)

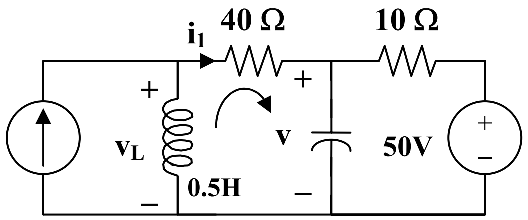

(b)

Chapter 8, Solution 32.

For t = 0-, the equivalent circuit is shown below.

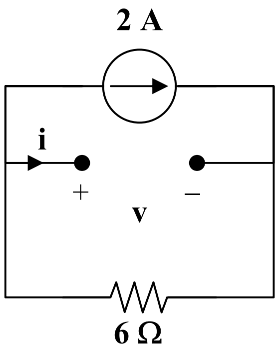

$$i(0-) = 0, \; v(0-) = -2x6 = -12V$$

For t > 0, we have a series RLC circuit with a step input.

$$\alpha = R/(2L) = 6/2 = 3, \; \omega_o = 1/\sqrt{LC} = 1/\sqrt{0.04}$$

$$s = -3 \pm \sqrt{9 - 25} = -3 \pm j4$$

$$\text{Thus,} \quad v(t) = V_f + [(A\cos 4t + B\sin 4t)e^{-3t}]$$

where V_f = final capacitor voltage = 50 V

$$v(t) = 50 + [(A\cos 4t + B\sin 4t)e^{-3t}]$$

$$v(0) = -12 = 50 + A \text{ which gives } A = -62$$

$$i(0) = 0 = Cdv(0)/dt$$

$$dv/dt = [-3(A\cos 4t + B\sin 4t)e^{-3t}] + [4(-A\sin 4t + B\cos 4t)e^{-3t}]$$

$$0 = dv(0)/dt = -3A + 4B \text{ or } B = (3/4)A = -46.5$$

$$v(t) = \underline{\{50 + [(-62\cos 4t - 46.5\sin 4t)e^{-3t}]\}\text{ V}}$$

Chapter 8, Solution 33.

We may transform the current sources to voltage sources. For t = 0^-, the equivalent circuit is shown in Figure (a).

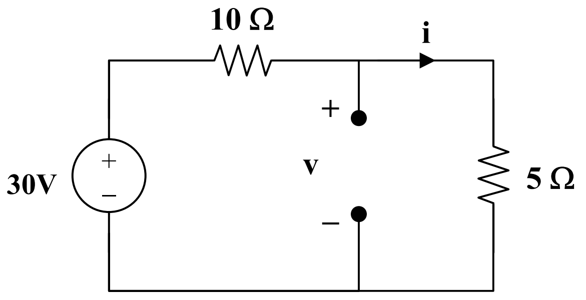

(a)

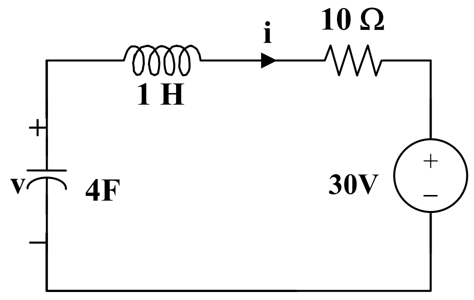

(b)

$$i(0) = 30/15 = 2\text{ A},\ v(0) = 5\text{x}30/15 = 10\text{ V}$$

For t > 0, we have a series RLC circuit.

$$\alpha = R/(2L) = 5/2 = 2.5$$

$$\omega_o = 1/\sqrt{LC} = 1/\sqrt{4} = 0.25, \text{ clearly } \alpha > \omega_o \text{ (overdamped response)}$$

$$s_{1,2} = -\alpha \pm \sqrt{\alpha^2 - \omega_o^2} = -2.5 \pm \sqrt{6.25 - 0.25} = -4.95, -0.05$$

$$v(t) = V_s + [A_1e^{-4.95t} + A_2e^{-0.05t}],\ v = 20.$$

$$v(0) = 10 = 20 + A_1 + A_2 \qquad (1)$$

$$i(0) = Cdv(0)/dt \text{ or } dv(0)/dt = 2/4 = 1/2$$

Hence, $\frac{1}{2} = -4.95A_1 - 0.05A_2$ (2)

From (1) and (2), $A_1 = 0, \; A_2 = -10.$

$$v(t) = \underline{\mathbf{\{20 - 10e^{-0.05t}\}\ V}}$$

Chapter 8, Solution 34.

Before t = 0, the capacitor acts like an open circuit while the inductor behaves like a short circuit.

$$i(0) = 0, v(0) = 20 \text{ V}$$

For t > 0, the LC circuit is disconnected from the voltage source as shown below.

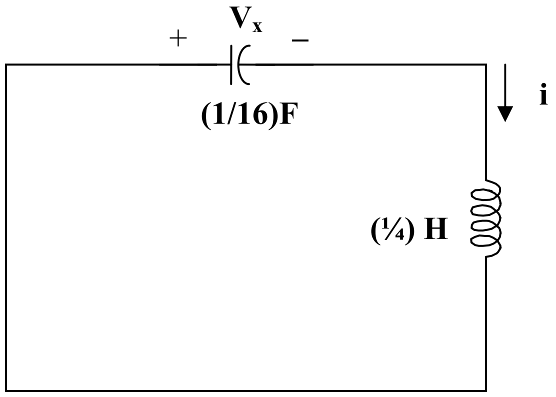

This is a lossless, source-free, series RLC circuit.

$$\alpha = R/(2L) = 0, \omega_o = 1/\sqrt{LC} = 1/\sqrt{\frac{1}{16}+\frac{1}{4}} = 8, \; s = \pm j8$$

Since α is less than ω_o, we have an underdamped response. Therefore,

$$i(t) = A_1\cos 8t + A_2\sin 8t \text{ where } i(0) = 0 = A_1$$

$$di(0)/dt = (1/L)v_L(0) = -(1/L)v(0) = -4x20 = -80$$

However, $di/dt = 8A_2\cos 8t$, thus, $di(0)/dt = -80 = 8A_2$ which leads to $A_2 = -10$

Now we have $i(t) = \underline{\mathbf{-10\sin 8t\ A}}$

Chapter 8, Solution 35.

At t = 0-, $i_L(0) = 0$, $v(0) = v_C(0) = 8$ V

For t > 0, we have a series RLC circuit with a step input.

$$\alpha = R/(2L) = 2/2 = 1,\ \omega_o = 1/\sqrt{LC} = 1/\sqrt{1/5} = \sqrt{5}$$

$$s_{1,2} = -\alpha \pm \sqrt{\alpha^2 - \omega_o^2} = -1 \pm j2$$

$$v(t) = V_s + [(A\cos 2t + B\sin 2t)e^{-t}],\ V_s = 12.$$

$$v(0) = 8 = 12 + A \text{ or } A = -4,\ i(0) = Cdv(0)/dt = 0.$$

$$\text{But } dv/dt = [-(A\cos 2t + B\sin 2t)e^{-t}] + [2(-A\sin 2t + B\cos 2t)e^{-t}]$$

$$0 = dv(0)/dt = -A + 2B \text{ or } 2B = A = -4 \text{ and } B = -2$$

$$v(t) = \underline{\{12 - (4\cos 2t + 2\sin 2t)e^{-t}\ V}.$$

Chapter 8, Solution 36.

For t = 0-, 3u(t) = 0. Thus, i(0) = 0, and v(0) = 20 V.

For t > 0, we have the series RLC circuit shown below.

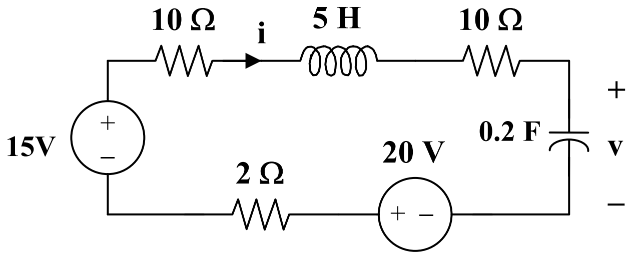

$$\alpha = R/(2L) = (2 + 5 + 1)/(2x5) = 0.8$$

$$\omega_o = 1/\sqrt{LC} = 1/\sqrt{5x0.2} = 1$$

$$s_{1,2} = -\alpha \pm \sqrt{\alpha^2 - \omega_o^2} = -0.8 \pm j0.6$$

$$v(t) = V_s + [(A\cos 0.6t + B\sin 0.6t)e^{-0.8t}]$$

$$V_s = 15 + 20 = 35\text{V and } v(0) = 20 = 35 + A \text{ or } A = -15$$

$$i(0) = Cdv(0)/dt = 0$$

$$\text{But } dv/dt = [-0.8(A\cos 0.6t + B\sin 0.6t)e^{-0.8t}] + [0.6(-A\sin 0.6t + B\cos 0.6t)e^{-0.8t}]$$

$$0 = dv(0)/dt = -0.8A + 0.6B \text{ which leads to } B = 0.8\text{x}(-15)/0.6 = -20$$

$$v(t) = \underline{\mathbf{\{35 - [(15\cos 0.6t + 20\sin 0.6t)e^{-0.8t}]\}\ V}}$$

$$i = Cdv/dt = 0.2\{[0.8(15\cos 0.6t + 20\sin 0.6t)e^{-0.8t}] + [0.6(15\sin 0.6t - 20\cos 0.6t)e^{-0.8t}]\}$$

$$i(t) = \underline{\mathbf{[(5\sin 0.6t)e^{-0.8t}]\ A}}$$

Chapter 8, Solution 37.

For t = 0-, the equivalent circuit is shown below.

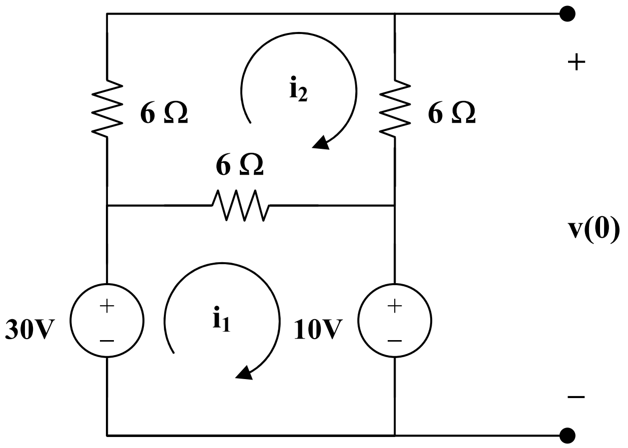

$$18i_2 - 6i_1 = 0 \text{ or } i_1 = 3i_2 \qquad (1)$$

$$-30 + 6(i_1 - i_2) + 10 = 0 \text{ or } i_1 - i_2 = 10/3 \qquad (2)$$

From (1) and (2). $i_1 = 5,\ i_2 = 5/3$

$$i(0) = i_1 = 5\text{A}$$

$$-10 - 6i_2 + v(0) = 0$$

$$v(0) = 10 + 6x5/3 = 20$$

For $t > 0$, we have a series RLC circuit.

$$R = 6||12 = 4$$

$$\omega_o = 1/\sqrt{LC} = 1/\sqrt{(1/2)(1/8)} = 4$$

$$\alpha = R/(2L) = (4)/(2x(1/2)) = 4$$

$\alpha = \omega_o$, therefore the circuit is critically damped

$$v(t) = V_s + [(A + Bt)e^{-4t}], \text{ and } V_s = 10$$

$$v(0) = 20 = 10 + A, \text{ or } A = 10$$

$$i = Cdv/dt = -4C[(A + Bt)e^{-4t}] + C[(B)e^{-4t}]$$

$$i(0) = 5 = C(-4A + B) \text{ which leads to } 40 = -40 + B \text{ or } B = 80$$

$$i(t) = [-(1/2)(10 + 80t)e^{-4t}] + [(10)e^{-4t}]$$

$i(t) = \underline{\mathbf{[(5 - 40t)e^{-4t}]\ A}}$

Chapter 8, Solution 38.

At $t = 0^-$, the equivalent circuit is as shown.

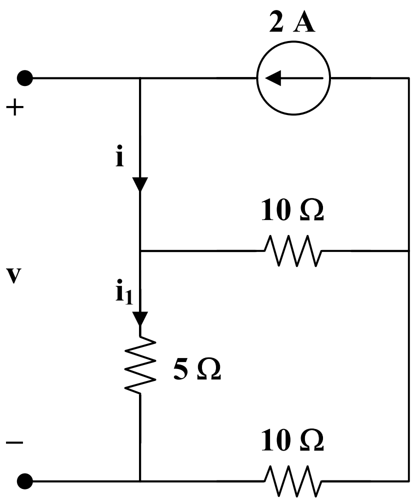

$$i(0) = 2A, \quad i_1(0) = 10(2)/(10 + 15) = 0.8 \text{ A}$$

$$v(0) = 5i_1(0) = 4V$$

For $t > 0$, we have a source-free series RLC circuit.

$$R = 5||(10 + 10) = 4 \text{ ohms}$$

$$\omega_o = 1/\sqrt{LC} = 1/\sqrt{(1/3)(3/4)} = 2$$

$$\alpha = R/(2L) = (4)/(2x(3/4)) = 8/3$$

$$s_{1,2} = -\alpha \pm \sqrt{\alpha^2 - \omega_o^2} = -4.431, -0.903$$

$$i(t) = [Ae^{-4.431t} + Be^{-0.903t}]$$

$$i(0) = A + B = 2 \qquad (1)$$

$$di(0)/dt = (1/L)[-Ri(0) + v(0)] = (4/3)(-4x2 + 4) = -16/3 = -5.333$$

$$\text{Hence, } -5.333 = -4.431A - 0.903B \qquad (2)$$

From (1) and (2), $A = 1$ and $B = 1$.

$i(t) =$ <u>$[e^{-4.431t} + e^{-0.903t}]$ **A**</u>

Chapter 8, Solution 39.

For $t = 0^-$, the equivalent circuit is shown in Figure (a). Where $60u(-t) = 60$ and $30u(t) = 0$.

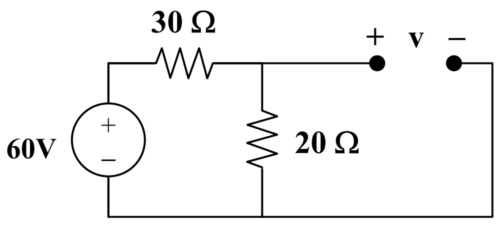

(a)

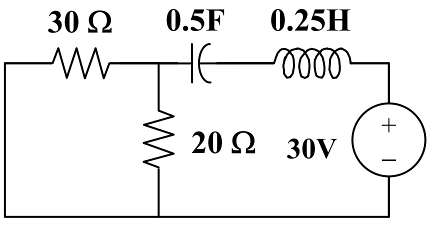

(b)

$$v(0) = (20/50)(60) = 24 \text{ and } i(0) = 0$$

For $t > 0$, the circuit is shown in Figure (b).

$$R = 20||30 = 12 \text{ ohms}$$

$$\omega_o = 1/\sqrt{LC} = 1/\sqrt{(1/2)(1/4)} = \sqrt{8}$$

$$\alpha = R/(2L) = (12)/(0.5) = 24$$

Since $\alpha > \omega_o$, we have an overdamped response.

$$s_{1,2} = -\alpha \pm \sqrt{\alpha^2 - \omega_o^2} = -47.833, -0.167$$

Thus, $v(t) = V_s + [Ae^{-47.833t} + Be^{-0.167t}], \quad V_s = 30$

$$v(0) = 24 = 30 + A + B \text{ or } -6 = A + B \qquad (1)$$

$$i(0) = Cdv(0)/dt = 0$$

But, $dv(0)/dt = -47.833A - 0.167B = 0$

$$B = -286.43A \qquad (2)$$

From (1) and (2), $A = 0.021$ and $B = -6.021$

$$v(t) = \underline{\mathbf{30 + [0.021e^{-47.833t} - 6.021e^{-0.167t}]\ V}}$$

Chapter 8, Solution 40.

At $t = 0-$, $v_C(0) = 0$ and $i_L(0) = i(0) = (6/(6 + 2))4 = 3A$

For $t > 0$, we have a series RLC circuit with a step input as shown below.

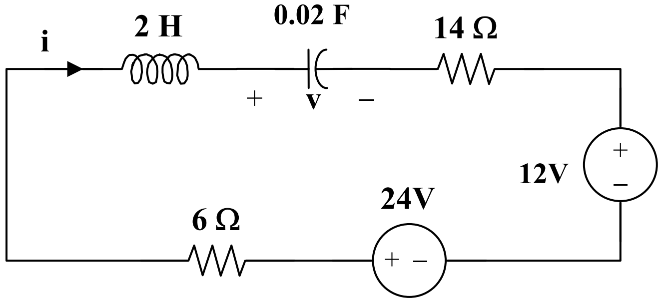

$$\omega_o = 1/\sqrt{LC} = 1/\sqrt{2x0.02} = 5$$

$$\alpha = R/(2L) = (6 + 14)/(2x2) = 5$$

Since $\alpha = \omega_o$, we have a critically damped response.

$$v(t) = V_s + [(A + Bt)e^{-5t}], \quad V_s = 24 - 12 = 12V$$

$$v(0) = 0 = 12 + A \text{ or } A = -12$$

$$i = Cdv/dt = C\{[Be^{-5t}] + [-5(A + Bt)e^{-5t}]\}$$

$$i(0) = 3 = C[-5A + B] = 0.02[60 + B] \text{ or } B = 90$$

$$\text{Thus,} \quad i(t) = 0.02\{[90e^{-5t}] + [-5(-12 + 90t)e^{-5t}]\}$$

$$i(t) = \underline{\mathbf{\{(3 - 9t)e^{-5t}\}\ A}}$$

Chapter 8, Solution 41.

At t = 0-, the switch is open. i(0) = 0, and

$$v(0) = 5x100/(20 + 5 + 5) = 50/3$$

For t > 0, we have a series RLC circuit shown in Figure (a). After source transformation, it becomes that shown in Figure (b).

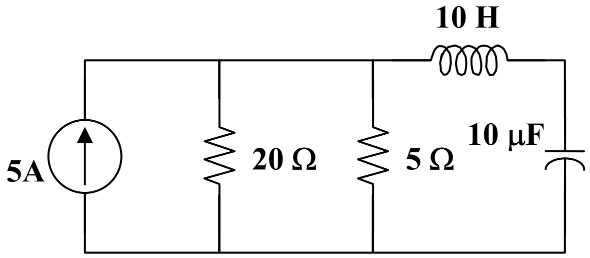

(a)

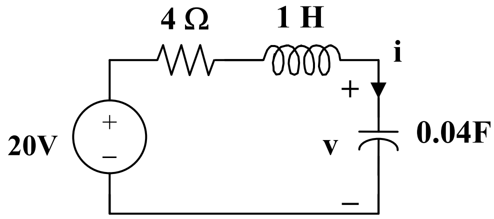

(b)

$$\omega_o = 1/\sqrt{LC} = 1/\sqrt{1x1/25} = 5$$

$$\alpha = R/(2L) = (4)/(2x1) = 2$$

$$s_{1,2} = -\alpha \pm \sqrt{\alpha^2 - \omega_o^2} = -2 \pm j4.583$$

Thus, $v(t) = V_s + [(A\cos\omega_d t + B\sin\omega_d t)e^{-2t}]$,

where $\omega_d = 4.583$ and $V_s = 20$

$$v(0) = 50/3 = 20 + A \text{ or } A = -10/3$$

$$i(t) = Cdv/dt = C(-2)\,[(A\cos\omega_d t + B\sin\omega_d t)e^{-2t}] + C\omega_d[(-A\sin\omega_d t + B\cos\omega_d t)e^{-2t}]$$

$$i(0) = 0 = -2A + \omega_d B$$

$$B = 2A/\omega_d = -20/(3x4.583) = -1.455$$

$$i(t) = C\{[(0\cos\omega_d t + (-2B - \omega_d A)\sin\omega_d t)]e^{-2t}\}$$

$$= (1/25)\{[(2.91 + 15.2767)\sin\omega_d t)]e^{-2t}\}$$

$$i(t) = \underline{\{0.7275\sin(4.583t)e^{-2t}\}\ A}$$

Chapter 8, Solution 42.

For t = 0-, we have the equivalent circuit as shown in Figure (a).

$$i(0) = i(0) = 0, \text{ and } v(0) = 4 - 12 = -8V$$

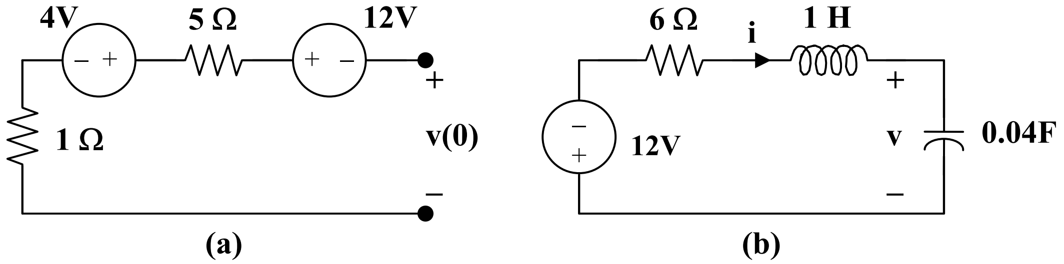

For t > 0, the circuit becomes that shown in Figure (b) after source transformation.

$$\omega_o = 1/\sqrt{LC} = 1/\sqrt{1x1/25} = 5$$

$$\alpha = R/(2L) = (6)/(2) = 3$$

$$s_{1,2} = -\alpha \pm \sqrt{\alpha^2 - \omega_o^2} = -3 \pm j4$$

Thus, $v(t) = V_s + [(A\cos 4t + B\sin 4t)e^{-3t}],\quad V_s = -12$

$$v(0) = -8 = -12 + A \text{ or } A = 4$$

$$i = Cdv/dt, \text{ or } i/C = dv/dt = [-3(A\cos 4t + B\sin 4t)e^{-3t}] + [4(-A\sin 4t + B\cos 4t)e^{-3t}]$$

$$i(0) = -3A + 4B \text{ or } B = 3$$

$$v(t) = \underline{\{-12 + [(4\cos 4t + 3\sin 4t)e^{-3t}]\}\ A}$$

Chapter 8, Solution 43.

For t>0, we have a source-free series RLC circuit.

$$\alpha = \frac{R}{2L} \longrightarrow R = 2\alpha L = 2x8x0.5 = \underline{8\Omega}$$

$$\omega_d = \sqrt{\omega_o^{\ 2} - \alpha^2} = 30 \longrightarrow \omega_o = \sqrt{900 - 64} = \sqrt{836}$$

$$\omega_o = \frac{1}{\sqrt{LC}} \longrightarrow C = \frac{1}{\omega^2{}_o L} = \frac{1}{836x0.5} = \underline{2.392\,\text{mF}}$$

Chapter 8, Solution 44.

$$\alpha = \frac{R}{2L} = \frac{1000}{2x1} = 500, \qquad \omega_o = \frac{1}{\sqrt{LC}} = \frac{1}{\sqrt{100x10^{-9}}} = 10^4$$

$\omega_o > \alpha \longrightarrow$ **underdamped.**

Chapter 8, Solution 45.

$$\omega_o = 1/\sqrt{LC} = 1/\sqrt{1x0.5} = \sqrt{2}$$

$$\alpha = R/(2L) = (1)/(2x2x0.5) = 0.5$$

Since $\alpha < \omega_o$, we have an underdamped response.

$$s_{1,2} = -\alpha \pm \sqrt{\alpha^2 - \omega_o^2} = -0.5 \pm j1.323$$

Thus, $i(t) = I_s + [(A\cos 1.323t + B\sin 1.323t)e^{-0.5t}], \quad I_s = 4$

$$i(0) = 1 = 4 + A \text{ or } A = -3$$

$$v = v_C = v_L = Ldi(0)/dt = 0$$

$$di/dt = [1.323(-A\sin 1.323t + B\cos 1.323t)e^{-0.5t}] + [-0.5(A\cos 1.323t + B\sin 1.323t)e^{-0.5t}]$$

$$di(0)/dt = 0 = 1.323B - 0.5A \text{ or } B = 0.5(-3)/1.323 = -1.134$$

Thus, $i(t) = \underline{\mathbf{\{4 - [(3\cos 1.323t + 1.134\sin 1.323t)e^{-0.5t}]\}\ A}}$

Chapter 8, Solution 46.

For t = 0-, u(t) = 0, so that v(0) = 0 and i(0) = 0.

For t > 0, we have a parallel RLC circuit with a step input, as shown below.

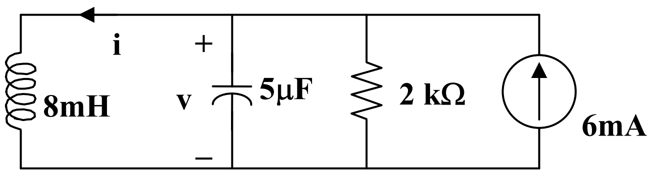

$$\alpha = 1/(2RC) = (1)/(2x2x10^3\ x5x10^{-6}) = 50$$

$$\omega_o = 1/\sqrt{LC} = 1/\sqrt{8x10^3 x5x10^{-6}} = 5{,}000$$

Since $\alpha < \omega_o$, we have an underdamped response.

$$s_{1,2} = -\alpha \pm \sqrt{\alpha^2 - \omega_o^2} \cong -50 \pm j5{,}000$$

Thus, $i(t) = I_s + [(A\cos 5{,}000t + B\sin 5{,}000t)e^{-50t}],\quad I_s = 6mA$

$$i(0) = 0 = 6 + A \text{ or } A = -6mA$$

$$v(0) = 0 = Ldi(0)/dt$$

$$di/dt = [5{,}000(-A\sin 5{,}000t + B\cos 5{,}000t)e^{-50t}] + [-50(A\cos 5{,}000t + B\sin 5{,}000t)e^{-50t}]$$

$$di(0)/dt = 0 = 5{,}000B - 50A \text{ or } B = 0.01(-6) = -0.06mA$$

Thus, $i(t) = \underline{\mathbf{\{6 - [(6\cos 5{,}000t + 0.06\sin 5{,}000t)e^{-50t}]\}\ mA}}$

Chapter 8, Solution 47.

At t = 0-, we obtain, $i_L(0) = 3x5/(10 + 5) = 1A$

and $v_o(0) = 0$.

For t > 0, the 20-ohm resistor is short-circuited and we have a parallel RLC circuit with a step input.

$$\alpha = 1/(2RC) = (1)/(2x5x0.01) = 10$$

$$\omega_o = 1/\sqrt{LC} = 1/\sqrt{1x0.01} = 10$$

Since $\alpha = \omega_o$, we have a critically damped response.

$$s_{1,2} = -10$$

Thus, $$i(t) = I_s + [(A + Bt)e^{-10t}], \quad I_s = 3$$

$$i(0) = 1 = 3 + A \text{ or } A = -2$$

$$v_o = Ldi/dt = [Be^{-10t}] + [-10(A + Bt)e^{-10t}]$$

$$v_o(0) = 0 = B - 10A \text{ or } B = -20$$

Thus, $v_o(t) =$ **(200te^{-10t}) V**

Chapter 8, Solution 48.

For $t = 0-$, we obtain $i(0) = -6/(1 + 2) = -2$ and $v(0) = 2x1 = 2$.

For $t > 0$, the voltage is short-circuited and we have a source-free parallel RLC circuit.

$$\alpha = 1/(2RC) = (1)/(2x1x0.25) = 2$$

$$\omega_o = 1/\sqrt{LC} = 1/\sqrt{1x0.25} = 2$$

Since $\alpha = \omega_o$, we have a critically damped response.

$$s_{1,2} = -2$$

Thus, $$i(t) = [(A + Bt)e^{-2t}], \quad i(0) = -2 = A$$

$$v = Ldi/dt = [Be^{-2t}] + [-2(-2 + Bt)e^{-2t}]$$

$$v_o(0) = 2 = B + 4 \text{ or } B = -2$$

Thus, $i(t) =$ **[(-2 - 2t)e^{-2t}] A**

and $v(t) =$ **[(2 + 4t)e^{-2t}] V**

Chapter 8, Solution 49.

For $t = 0^-$, $i(0) = 3 + 12/4 = 6$ and $v(0) = 0$.

For $t > 0$, we have a parallel *RLC* circuit with a step input.

$$\alpha = 1/(2RC) = (1)/(2x5x0.05) = 2$$

$$\omega_o = 1/\sqrt{LC} = 1/\sqrt{5x0.05} = 2$$

Since $\alpha = \omega_o$, we have a critically damped response.

$$s_{1,2} = -2$$

Thus, $$i(t) = I_s + [(A + Bt)e^{-2t}], \quad I_s = 3$$

$$i(0) = 6 = 3 + A \text{ or } A = 3$$

$$v = Ldi/dt \text{ or } v/L = di/dt = [Be^{-2t}] + [-2(A + Bt)e^{-2t}]$$

$$v(0)/L = 0 = di(0)/dt = B - 2x3 \text{ or } B = 6$$

Thus, $i(t) =$ $\underline{\mathbf{\{3 + [(3 + 6t)e^{-2t}]\}\ A}}$

Chapter 8, Solution 50.

For $t = 0-$, $4u(t) = 0$, $v(0) = 0$, and $i(0) = 30/10 = 3A$.

For $t > 0$, we have a parallel RLC circuit.

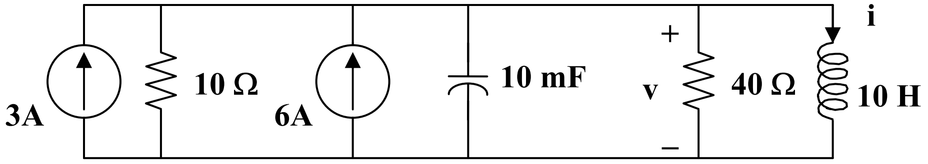

$$I_s = 3 + 6 = 9A \text{ and } R = 10||40 = 8 \text{ ohms}$$

$$\alpha = 1/(2RC) = (1)/(2x8x0.01) = 25/4 = 6.25$$

$$\omega_o = 1/\sqrt{LC} = 1/\sqrt{4x0.01} = 5$$

Since $\alpha > \omega_o$, we have a overdamped response.

$$s_{1,2} = -\alpha \pm \sqrt{\alpha^2 - \omega_o^2} = -10, -2.5$$

Thus, $i(t) = I_s + [Ae^{-10t}] + [Be^{-2.5t}], \quad I_s = 9$

$$i(0) = 3 = 9 + A + B \text{ or } A + B = -6$$

$$di/dt = [-10Ae^{-10t}] + [-2.5Be^{-2.5t}],$$

$$v(0) = 0 = Ldi(0)/dt \text{ or } di(0)/dt = 0 = -10A - 2.5B \text{ or } B = -4A$$

Thus, $A = 2$ and $B = -8$

Clearly, $i(t) = \underline{\{9 + [2e^{-10t}] + [-8e^{-2.5t}]\}\text{ A}}$

Chapter 8, Solution 51.

Let i = inductor current and v = capacitor voltage.
At t = 0, v(0) = 0 and $i(0) = i_o$.

For $t > 0$, we have a parallel, source-free LC circuit ($R = \infty$).

$$\alpha = 1/(2RC) = 0 \text{ and } \omega_o = 1/\sqrt{LC} \text{ which leads to } s_{1,2} = \pm j\omega_o$$

$$v = A\cos\omega_o t + B\sin\omega_o t, \; v(0) = 0 \;\; A$$

$$i_C = Cdv/dt = -i$$

$$dv/dt = \omega_o B\sin\omega_o t = -i/C$$

$$dv(0)/dt = \omega_o B = -i_o/C \text{ therefore } B = i_o/(\omega_o C)$$

$$v(t) = \underline{-(i_o/(\omega_o C))\sin\omega_o t \text{ V where } \omega_o = \sqrt{LC}}$$

Chapter 8, Solution 52.

$$\alpha = 300 = \frac{1}{2RC} \qquad (1)$$

$$\omega_d = \sqrt{\omega_o^{\,2} - \alpha^2} = 400 \longrightarrow \omega_o = \sqrt{400^2 - 300^2} = 264.575 = \frac{1}{\sqrt{LC}} \qquad (2)$$

From (2),

$$C = \frac{1}{(264.575)^2 x 50 x 10^{-3}} = \underline{285.71\mu\text{F}}$$

From (1),

$$R = \frac{1}{2\alpha C} = \frac{1}{2x300}(3500) = \underline{5.833\Omega}$$

Chapter 8, Solution 53.

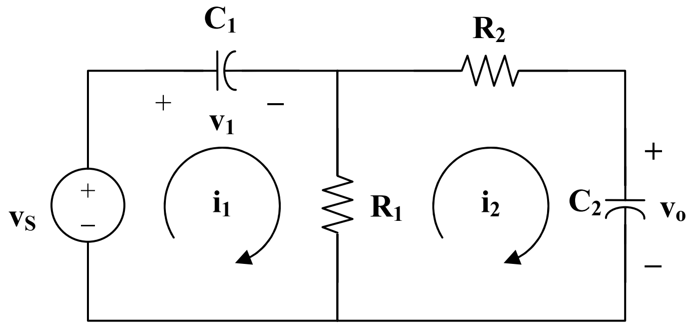

$$i_2 = C_2 dv_o/dt \qquad (1)$$

$$i_1 = C_1 dv_1/dt \qquad (2)$$

$$0 = R_2 i_2 + R_1(i_2 - i_1) + v_o \qquad (3)$$

Substituting (1) and (2) into (3) we get,

$$0 = R_2C_2 dv_o/dt + R_1(C_2 dv_o/dt - C_1 dv_1/dt) \qquad (4)$$

Applying KVL to the outer loop produces,

$$v_s = v_1 + i_2R_2 + v_o = v_1 + R_2C_2 dv_o/dt + v_o, \text{ which leads to}$$

$$v_1 = v_s - v_o - R_2C_2 dv_o/dt \qquad (5)$$

Substituting (5) into (4) leads to,

$$0 = R_1C_2 dv_o/dt + R_1C_2 dv_o/dt - R_1C_1(dv_s/dt - dv_o/dt - R_2C_2 d^2v_o/dt^2)$$

Hence, $\underline{\mathbf{(R_1C_1R_2C_2)(d^2v_o/dt^2) + (R_1C_1 + R_2C_2 + R_1C_2)(dv_o/dt) = R_1C_1(dv_s/dt)}}$

Chapter 8, Solution 54.

Let i be the inductor current.

$$-i = \frac{v}{4} + 0.5\frac{dv}{dt} \qquad (1)$$

$$v = 2i + \frac{di}{dt} \qquad (2)$$

Substituting (1) into (2) gives

$$-v = \frac{v}{2} + \frac{dv}{dt} + \frac{1}{4}\frac{dv}{dt} + \frac{1}{2}\frac{d^2v}{dt^2} \quad \longrightarrow \quad \frac{d^2v}{dt^2} + 2.5\frac{dv}{dt} + 3v = 0$$

$$s^2 + 2.5s + 3 = 0 \quad \longrightarrow \quad s = -1.25 \pm j1.199$$

$$v = Ae^{-1.25t}\cos 1.199t + Be^{-1.25t}\sin 1.199t$$

v(0) = 2=A. Let w=1.199

$$\frac{dv}{dt} = -1.25(Ae^{-1.25t}\cos wt + Be^{-1.25t}\sin wt) + w(-Ae^{-1.25t}\sin wt + Be^{-1.25t}\cos wt)$$

$$\frac{dv(0)}{dt} = 0 = -1.25A + Bw \quad \longrightarrow \quad B = \frac{1.25X2}{1.199} = 2.085$$

$$v = \underline{2e^{-1.25t}\cos 1.199t + 2.085e^{-1.25t}\sin 1.199t} \text{ V}$$

Chapter 8, Solution 55.

At the top node, writing a KCL equation produces,

$$i/4 + i = C_1 dv/dt, \quad C_1 = 0.1$$

$$5i/4 = C_1 dv/dt = 0.1 dv/dt$$

$$i = 0.08 dv/dt \quad (1)$$

But, $$v = -(2i + (1/C_2)\int i dt), \quad C_2 = 0.5$$

or $$-dv/dt = 2di/dt + 2i \quad (2)$$

Substituting (1) into (2) gives,

$$-dv/dt = 0.16 d^2v/dt^2 + 0.16 dv/dt$$

$$0.16 d^2v/dt^2 + 0.16 dv/dt + dv/dt = 0, \text{ or } d^2v/dt^2 + 7.25 dv/dt = 0$$

Which leads to $s^2 + 7.25s = 0 = s(s + 7.25)$ or $s_{1,2} = 0, -7.25$

$$v(t) = A + Be^{-7.25t} \quad (3)$$

$$v(0) = 4 = A + B \quad (4)$$

From (1), $i(0) = 2 = 0.08dv(0+)/dt$ or $dv(0+)/dt = 25$

But, $dv/dt = -7.25Be^{-7.25t}$, which leads to,

$dv(0)/dt = -7.25B = 25$ or $B = -3.448$ and $A = 4 - B = 4 + 3.448 = 7.448$

Thus, $v(t)$ = **$\{7.45 - 3.45e^{-7.25t}\}$ V**

Chapter 8, Solution 56.

For $t < 0$, $i(0) = 0$ and $v(0) = 0$.

For $t > 0$, the circuit is as shown below.

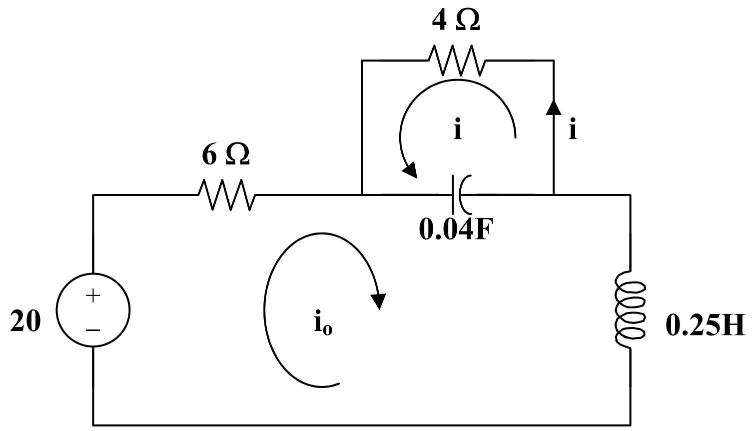

Applying KVL to the larger loop,

$$-20 + 6i_o + 0.25di_o/dt + 25\int(i_o + i)dt = 0$$

Taking the derivative,

$$6di_o/dt + 0.25d^2i_o/dt^2 + 25(i_o + i) = 0 \qquad (1)$$

For the smaller loop, $4 + 25\int(i + i_o)dt = 0$

Taking the derivative, $25(i + i_o) = 0$ or $i = -i_o$ (2)

From (1) and (2) $6di_o/dt + 0.25d^2i_o/dt^2 = 0$

This leads to, $0.25s^2 + 6s = 0$ or $s_{1,2} = 0, -24$

$$i_o(t) = (A + Be^{-24t}) \text{ and } i_o(0) = 0 = A + B \text{ or } B = -A$$

As t approaches infinity, $i_o(\infty) = 20/10 = 2 = A$, therefore $B = -2$

$$\text{Thus, } i_o(t) = (2 - 2e^{-24t}) = -i(t) \text{ or } i(t) = \underline{\mathbf{(-2 + 2e^{-24t})\ A}}$$

Chapter 8, Solution 57.

(a) Let v = capacitor voltage and i = inductor current. At t = 0-, the switch is closed and the circuit has reached steady-state.

$$v(0-) = 16V \text{ and } i(0-) = 16/8 = 2A$$

At t = 0+, the switch is open but, $v(0+) = 16$ and $i(0+) = 2$.

We now have a source-free RLC circuit.

$$R\ 8 + 12 = 20 \text{ ohms}, L = 1H, C = 4mF.$$

$$\alpha = R/(2L) = (20)/(2x1) = 10$$

$$\omega_o = 1/\sqrt{LC} = 1/\sqrt{1x(1/36)} = 6$$

Since $\alpha > \omega_o$, we have a overdamped response.

$$s_{1,2} = -\alpha \pm \sqrt{\alpha^2 - \omega_o^2} = -18, -2$$

Thus, the characteristic equation is $(s + 2)(s + 18) = 0$ or $\underline{\mathbf{s^2 + 20s + 36 = 0}}$.

(b) $$i(t) = [Ae^{-2t} + Be^{-18t}] \text{ and } i(0) = 2 = A + B \qquad (1)$$

To get di(0)/dt, consider the circuit below at t = 0+.

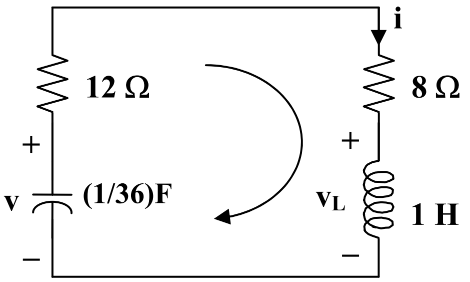

$$-v(0) + 20i(0) + v_L(0) = 0, \text{ which leads to,}$$

$-16 + 20x2 + v_L(0) = 0$ or $v_L(0) = -24$

$Ldi(0)/dt = v_L(0)$ which gives $di(0)/dt = v_L(0)/L = -24/1 = -24$ A/s

Hence $-24 = -2A - 18B$ or $12 = A + 9B$ (2)

From (1) and (2), $B = 1.25$ and $A = 0.75$

$i(t) = [0.75e^{-2t} + 1.25e^{-18t}] = -i_x(t)$ or $i_x(t) = \underline{\mathbf{[-0.75e^{-2t} - 1.25e^{-18t}]\ A}}$

$v(t) = 8i(t) = \underline{\mathbf{[6e^{-2t} + 10e^{-18t}]\ A}}$

Chapter 8, Solution 58.

(a) Let i =inductor current, v = capacitor voltage i(0) =0, $\underline{v(0) = 4}$

$$\frac{dv(0)}{dt} = -\frac{[v(0) + Ri(0)]}{RC} = -\frac{(4+0)}{0.5} = \underline{-8\text{ V/s}}$$

(b) For $t \geq 0$, the circuit is a source-free RLC parallel circuit.

$$\alpha = \frac{1}{2RC} = \frac{1}{2x0.5x1} = 1, \qquad \omega_o = \frac{1}{\sqrt{LC}} = \frac{1}{\sqrt{0.25x1}} = 2$$

$$\omega_d = \sqrt{\omega^2{}_o - \alpha^2} = \sqrt{4-1} = 1.732$$

Thus,

$$v(t) = e^{-t}(A_1 \cos 1.732t + A_2 \sin 1.732t)$$

$v(0) = 4 = A_1$

$$\frac{dv}{dt} = -e^{-t}A_1 \cos 1.732t - 1.732e^{-t}A_1 \sin 1.732t - e^{-t}A_2 \sin 1.732t + 1.732e^{-t}A_2 \cos 1.732t$$

$$\frac{dv(0)}{dt} = -8 = -A_1 + 1.732A_2 \qquad \longrightarrow \qquad A_2 = -2.309$$

$v(t) = \underline{e^{-t}(4\cos 1.732t - 2.309\sin 1.732t)}$ V

Chapter 8, Solution 59.

Let i = inductor current and v = capacitor voltage
v(0) = 0, i(0) = 40/(4+16) = 2A
For t>0, the circuit becomes a source-free series RLC with

$$\alpha = \frac{R}{2L} = \frac{16}{2x4} = 2, \qquad \omega_o = \frac{1}{\sqrt{LC}} = \frac{1}{\sqrt{4x1/16}} = 2, \qquad \longrightarrow \qquad \alpha = \omega_o = 2$$

$$i(t) = Ae^{-2t} + Bte^{-2t}$$

i(0) = 2 = A

$$\frac{di}{dt} = -2Ae^{-2t} + Be^{-2t} - 2Bte^{-2t}$$

$$\frac{di(0)}{dt} = -2A + B = -\frac{1}{L}[Ri(0) + v(0)] \qquad \longrightarrow \qquad -2A + B = -\frac{1}{4}(32 + 0), \qquad B = -4$$

$$i(t) = 2e^{-2t} - 4te^{-2t}$$

$$v = \frac{1}{C}\int_0^t idt + v(0) = 32\int_0^t e^{-2t}dt - 64\int_0^t te^{-2t}dt = -16e^{-2t}\Big|_0^t - \frac{64}{4}e^{-2t}(-2t-1)\Big|_0^t$$

$$v = \underline{32te^{-2t}} \text{ V}$$

Chapter 8, Solution 60.

At t = 0-, 4u(t) = 0 so that $i_1(0) = 0 = i_2(0)$ (1)

Applying nodal analysis,

$4 = 0.5di_1/dt + i_1 + i_2$ (2)

Also, $i_2 = [1di_1/dt - 1di_2/dt]/3$ or $3i_2 = di_1/dt - di_2/dt$ (3)

Taking the derivative of (2), $0 = d^2i_1/dt^2 + 2di_1/dt + 2di_2/dt$ (4)

From (2) and (3), $di_2/dt = di_1/dt - 3i_2 = di_1/dt - 3(4 - i_1 - 0.5di_1/dt)$

$= di_1/dt - 12 + 3i_1 + 1.5di_1/dt$

Substituting this into (4),

$d^2i_1/dt^2 + 7di_1/dt + 6i_1 = 24$ which gives $s^2 + 7s + 6 = 0 = (s + 1)(s + 6)$

$$\text{Thus,}\quad i_1(t) = I_s + [Ae^{-t} + Be^{-6t}],\; 6I_s = 24 \text{ or } I_s = 4$$

$$i_1(t) = 4 + [Ae^{-t} + Be^{-6t}] \text{ and } i_1(0) = 4 + [A + B] \qquad (5)$$

$$i_2 = 4 - i_1 - 0.5di_1/dt = i_1(t) = 4 + -4 - [Ae^{-t} + Be^{-6t}] - [-Ae^{-t} - 6Be^{-6t}]$$

$$= [-0.5Ae^{-t} + 2Be^{-6t}] \text{ and } i_2(0) = 0 = -0.5A + 2B \qquad (6)$$

From (5) and (6), $A = -3.2$ and $B = -0.8$

$$i_1(t) = \underline{\mathbf{\{4 + [-3.2e^{-t} - 0.8e^{-6t}]\}\ A}}$$

$$i_2(t) = \underline{\mathbf{[1.6e^{-t} - 1.6e^{-6t}]\ A}}$$

Chapter 8, Solution 61.

For $t > 0$, we obtain the natural response by considering the circuit below.

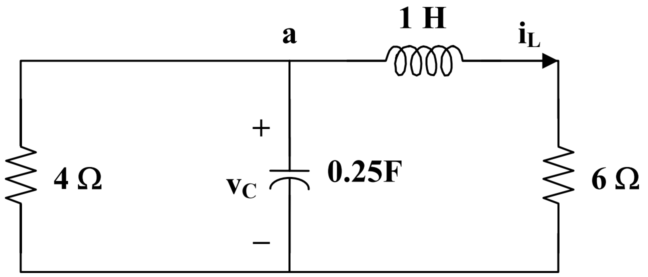

At node a, $v_C/4 + 0.25dv_C/dt + i_L = 0$ (1)

But, $v_C = 1di_L/dt + 6i_L$ (2)

Combining (1) and (2),

$$(1/4)di_L/dt + (6/4)i_L + 0.25d^2i_L/dt^2 + (6/4)di_L/dt + i_L = 0$$

$$d^2i_L/dt^2 + 7di_L/dt + 10i_L = 0$$

$$s^2 + 7s + 10 = 0 = (s + 2)(s + 5) \text{ or } s_{1,2} = -2, -5$$

$$\text{Thus,}\quad i_L(t) = i_L(\infty) + [Ae^{-2t} + Be^{-5t}],$$

where $i_L(\infty)$ represents the final inductor current $= 4(4)/(4 + 6) = 1.6$

$$i_L(t) = 1.6 + [Ae^{-2t} + Be^{-5t}] \text{ and } i_L(0) = 1.6 + [A+B] \text{ or } -1.6 = A+B \qquad (3)$$

$$di_L/dt = [-2Ae^{-2t} - 5Be^{-5t}]$$

and $di_L(0)/dt = 0 = -2A - 5B$ or $A = -2.5B$ (4)

From (3) and (4), $A = -8/3$ and $B = 16/15$

$$i_L(t) = 1.6 + [-(8/3)e^{-2t} + (16/15)e^{-5t}]$$

$$v(t) = 6i_L(t) = \underline{\mathbf{\{9.6 + [-16e^{-2t} + 6.4e^{-5t}]\}\ V}}$$

$$v_C = 1di_L/dt + 6i_L = [(16/3)e^{-2t} - (16/3)e^{-5t}] + \{9.6 + [-16e^{-2t} + 6.4e^{-5t}]\}$$

$$v_C = \{9.6 + [-(32/3)e^{-2t} + 1.0667e^{-5t}]\}$$

$$i(t) = v_C/4 = \underline{\mathbf{\{2.4 + [-2.667e^{-2t} + 0.2667e^{-5t}]\}\ A}}$$

Chapter 8, Solution 62.

This is a parallel RLC circuit as evident when the voltage source is turned off.

$$\alpha = 1/(2RC) = (1)/(2x3x(1/18)) = 3$$

$$\omega_o = 1/\sqrt{LC} = 1/\sqrt{2x1/18} = 3$$

Since $\alpha = \omega_o$, we have a critically damped response.

$$s_{1,2} = -3$$

Let $v(t)$ = capacitor voltage

Thus, $v(t) = V_s + [(A + Bt)e^{-3t}]$ where $V_s = 0$

But $-10 + v_R + v = 0$ or $v_R = 10 - v$

Therefore $v_R = \underline{\mathbf{10 - [(A + Bt)e^{-3t}]}}$ where A and B are determined from initial conditions.

Chapter 8, Solution 63.

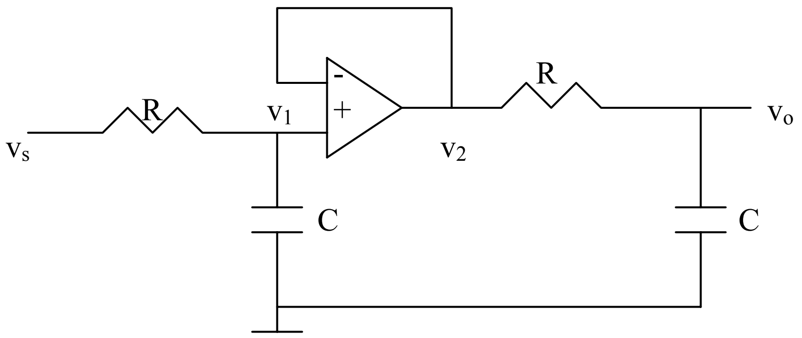

At node 1,

$$\frac{v_s - v_1}{R} = C\frac{dv_1}{dt} \qquad (1)$$

At node 2,

$$\frac{v_2 - v_o}{R} = C\frac{dv_o}{dt} \qquad (2)$$

As a voltage follower, $v_1 = v_2 = v$. Hence (2) becomes

$$v = v_o + RC\frac{dv_o}{dt} \qquad (3)$$

and (1) becomes

$$v_s = v + RC\frac{dv}{dt} \qquad (4)$$

Substituting (3) into (4) gives

$$v_s = v_o + RC\frac{dv_o}{dt} + RC\frac{dv_o}{dt} + R^2C^2\frac{d^2v_o}{dt^2}$$

or

$$\underline{R^2C^2\frac{d^2v_o}{dt^2} + 2RC\frac{dv_o}{dt} + v_o = v_s}$$

Chapter 8, Solution 64.

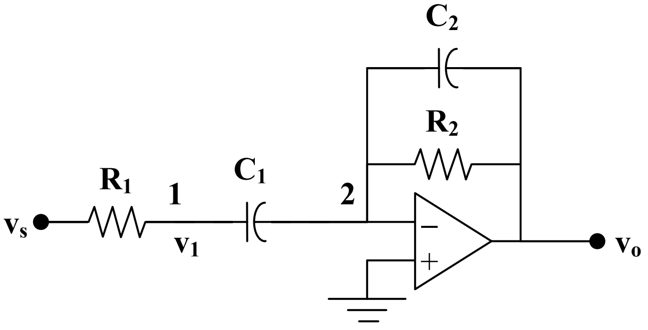

At node 1, $(v_s - v_1)/R_1 = C_1 d(v_1 - 0)/dt$ or $v_s = v_1 + R_1C_1dv_1/dt$ (1)

At node 2, $C_1dv_1/dt = (0 - v_o)/R_2 + C_2d(0 - v_o)/dt$

or $-R_2C_1dv_1/dt = v_o + C_2dv_o/dt$ (2)

From (1) and (2), $(v_s - v_1)/R_1 = C_1 dv_1/dt = -(1/R_2)(v_o + C_2dv_o/dt)$

or $v_1 = v_s + (R_1/R_2)(v_o + C_2dv_o/dt)$ (3)

Substituting (3) into (1) produces,

$$v_s = v_s + (R_1/R_2)(v_o + C_2dv_o/dt) + R_1C_1d\{v_s + (R_1/R_2)(v_o + C_2dv_o/dt)\}/dt$$

$$= v_s + (R_1/R_2)(v_o) + (R_1C_2/R_2)\, dv_o/dt) + R_1C_1dv_s/dt + (R_1R_1C_1/R_2)dv_o/dt + (R_1^2\, C_1C_2/R_2)[d2vo/dt^2]$$

Simplifying we get,

$$\underline{d^2v_o/dt^2 + [(1/ R_1C_1) + (1/ C_2)]dv_o/dt + [1/(R_1C_1C_2)](v_o) = - [R_2/(R_1C_2)]dv_s/dt}$$

Chapter 8, Solution 65.

At the input of the first op amp,

$(v_o - 0)/R = Cd(v_1 - 0)$ (1)

At the input of the second op amp,

$(-v_1 - 0)/R = Cdv_2/dt$ (2)

Let us now examine our constraints. Since the input terminals are essentially at ground, then we have the following,

$v_o = -v_2$ or $v_2 = -v_o$ (3)

Combining (1), (2), and (3), eliminating v_1 and v_2 we get,

$$\frac{d^2v_o}{dt^2} - \left(\frac{1}{R^2C^2}\right)v_o = \frac{d^2v_o}{dt^2} - 100v_o = 0$$

$$\text{Which leads to } s^2 - 100 = 0$$

Clearly this produces roots of –10 and +10.

And, we obtain,

$$v_o(t) = (Ae^{+10t} + Be^{-10t})V$$

$$\text{At } t = 0,\ v_o(0+) = -v_2(0+) = 0 = A + B,\ \text{thus } B = -A$$

This leads to $v_o(t) = (Ae^{+10t} - Ae^{-10t})V$. Now we can use $v_1(0+) = 2V$.

$$\text{From (2), } v_1 = -RCdv_2/dt = 0.1dv_o/dt = 0.1(10Ae^{+10t} + 10Ae^{-10t})$$

$$v_1(0+) = 2 = 0.1(20A) = 2A \text{ or } A = 1$$

$$\text{Thus, } v_o(t) = \underline{\mathbf{(e^{+10t} - e^{-10t})V}}$$

It should be noted that this circuit is unstable (clearly one of the poles lies in the right-half-plane).

Chapter 8, Solution 66.

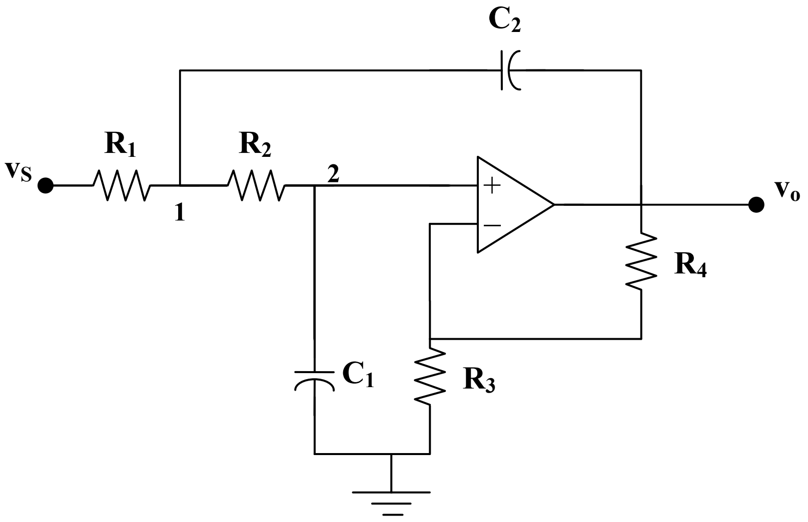

Note that the voltage across C_1 is $v_2 = [R_3/(R3 + R_4)]v_o$

This is the only difference between this problem and Example 8.11, i.e. $v = kv$, where $k = [R_3/(R3 + R_4)]$.

At node 1,

$$(v_s - v_1)/R_1 = C_2[d(v_1 - v_o)/dt] + (v_1 - v_2)/R_2$$

$$v_s/R_1 = (v_1/R_1) + C_2[d(v_1)/dt] - C_2[d(v_o)/dt] + (v_1 - kv_o)/R_2 \qquad (1)$$

At node 2,

$$(v_1 - kv_o)/R_2 = C_1[d(kv_o)/dt]$$

or

$$v_1 = kv_o + kR_2C_1[d(v_o)/dt] \qquad (2)$$

Substituting (2) into (1),

$$v_s/R_1 = (kv_o/R_1) + (kR_2C_1/R_1)[d(v_o)/dt] + kC_2[d(v_o)/dt] + kR_2C_1C_2[d^2(v_o)/dt^2] - (kv_o/R_2) + kC_1[d(v_o)/dt] - (kv_o/R_2) + C_2[d(v_o)/dt]$$

We now rearrange the terms.

$$[d^2(v_o)/dt^2] + [(1/C_2R_1) + (1/ R_2C_2) + (1/R_2C_1) - (1/ kR_2C_1)][d(v_o)/dt] + [v_o/(R_1R_2C_1C_2)] = v_s/(kR_1R_2C_1C_2)$$

If $R_1 = R_2$ 10 kohms, $C_1 = C_2 = 100\ \mu F$, $R_3 = 20$ kohms, and $R_4 = 60$ kohms,

$$k = [R_3/(R3 + R_4)] = 1/3$$

$$R_1R_2C_1C_2 = 10^4 \text{ x}10^4 \text{ x}10^{-4} \text{ x}10^{-4} = 1$$

$$(1/C_2R_1) + (1/ R_2C_2) + (1/R_2C_1) - (1/ kR_2C_1) = 1 + 1 + 1 - 3 = 3 - 3 = 0$$

Hence, $[d^2(v_o)/dt^2] + v_o = 3v_s = 6,\ t > 0,$ and $s^2 + 1 = 0$, or $s_{1,2} = \pm j$

$$v_o(t) = V_s + [A\cos t + B \sin t],\ V_s = 6$$

$$v_o(0) = 0 = 6 + A \text{ or } A = -6$$

$$dv_o/dt = -A\sin t + B\cos t, \text{ but } dv_o(0)/dt = 0 = B$$

Hence, $v_o(t) =$ **<u>6(1 – cost)u(t) volts</u>**.

Chapter 8, Solution 67.

At node 1,

$$\frac{v_{in} - v_1}{R_1} = C_1 \frac{d(v_1 - v_o)}{dt} + C_2 \frac{d(v_1 - 0)}{dt} \qquad (1)$$

At node 2,

$$C_2 \frac{d(v_1 - 0)}{dt} = \frac{0 - v_o}{R_2}, \text{ or } \frac{dv_1}{dt} = \frac{-v_o}{C_2 R_2} \qquad (2)$$

From (1) and (2),

$$v_{in} - v_1 = -\frac{R_1 C_1}{C_2 R_2}\frac{dv_o}{dt} - R_1 C_1 \frac{dv_o}{dt} - R_1 \frac{v_o}{R_2}$$

$$v_1 = v_{in} + \frac{R_1 C_1}{C_2 R_2}\frac{dv_o}{dt} + R_1 C_1 \frac{dv_o}{dt} + R_1 \frac{v_o}{R_2} \qquad (3)$$

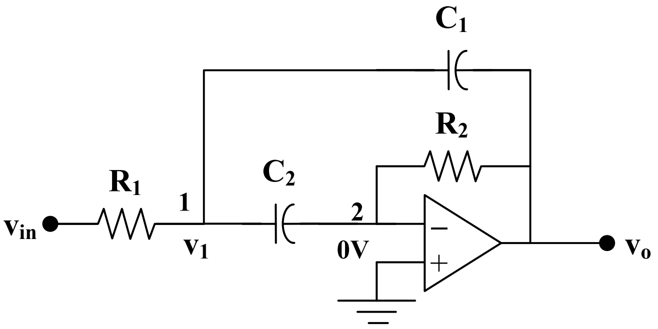

From (2) and (3),

$$-\frac{v_o}{C_2 R_2} = \frac{dv_1}{dt} = \frac{dv_{in}}{dt} + \frac{R_1 C_1}{C_2 R_2}\frac{dv_o}{dt} + R_1 C_1 \frac{d^2 v_o}{dt^2} + \frac{R_1}{R_2}\frac{dv_o}{dt}$$

$$\frac{d^2 v_o}{dt^2} + \frac{1}{R_2}\left(\frac{1}{C_1} + \frac{1}{C_2}\right)\frac{dv_o}{dt} + \frac{v_o}{C_1 C_2 R_2 R_1} = -\frac{1}{R_1 C_1}\frac{dv_{in}}{dt}$$

But $C_1 C_2 R_1 R_2 = 10^{-4} x10^{-4} x10^4 x10^4 = 1$

$$\frac{1}{R_2}\left(\frac{1}{C_1} + \frac{1}{C_2}\right) = \frac{2}{R_2 C_1} = \frac{2}{10^4 x10^{-4}} = 2$$

$$\frac{d^2 v_o}{dt^2} + 2\frac{dv_o}{dt} + v_o = -\frac{dv_{in}}{dt}$$

Which leads to $s^2 + 2s + 1 = 0$ or $(s + 1)^2 = 0$ and $s = -1, -1$

Therefore, $v_o(t) = [(A + Bt)e^{-t}] + V_f$

As t approaches infinity, the capacitor acts like an open circuit so that

$$V_f = v_o(\infty) = 0$$

$v_{in} = 10u(t)$ mV and the fact that the initial voltages across each capacitor is 0

means that $v_o(0) = 0$ which leads to $A = 0$.

$$v_o(t) = [Bte^{-t}]$$

$$\frac{dv_o}{dt} = [(B - Bt)e^{-t}] \qquad (4)$$

From (2), $$\frac{dv_o(0+)}{dt} = -\frac{v_o(0+)}{C_2R_2} = 0$$

From (1) at t = 0+,

$$\frac{1-0}{R_1} = -C_1\frac{dv_o(0+)}{dt} \text{ which leads to } \frac{dv_o(0+)}{dt} = -\frac{1}{C_1R_1} = -1$$

Substituting this into (4) gives $B = -1$

Thus, $v(t) = \mathbf{-te^{-t}u(t)\ V}$

Chapter 8, Solution 68.

The schematic is as shown below. The unit step is modeled by VPWL as shown. We insert a voltage marker to display V after simulation. We set Print Step = 25 ms and final step = 6s in the transient box. The output plot is shown below.

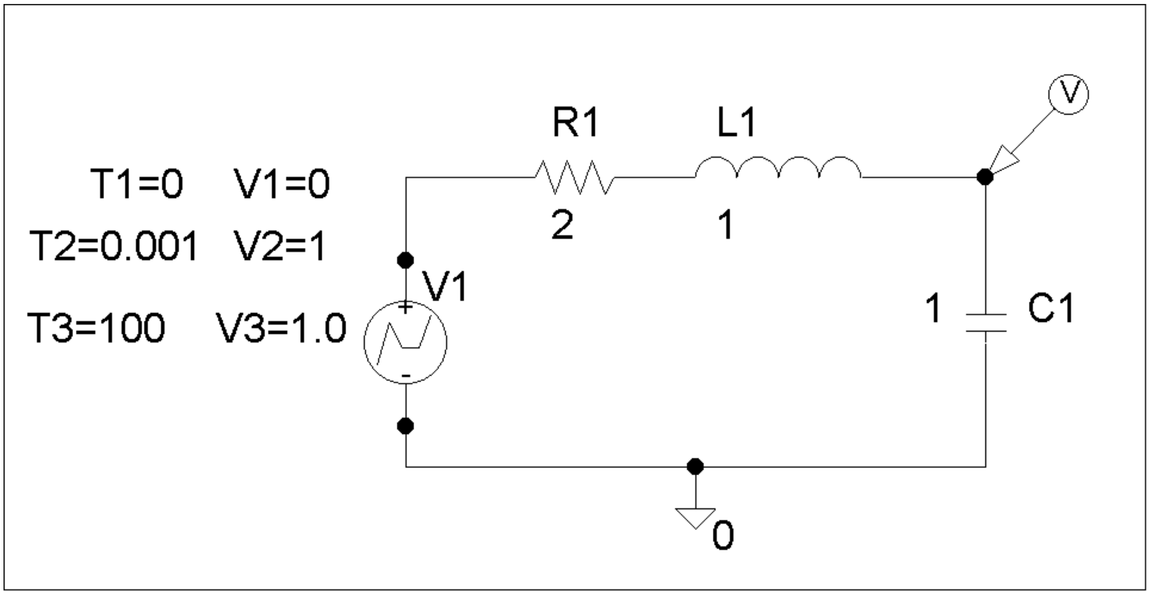

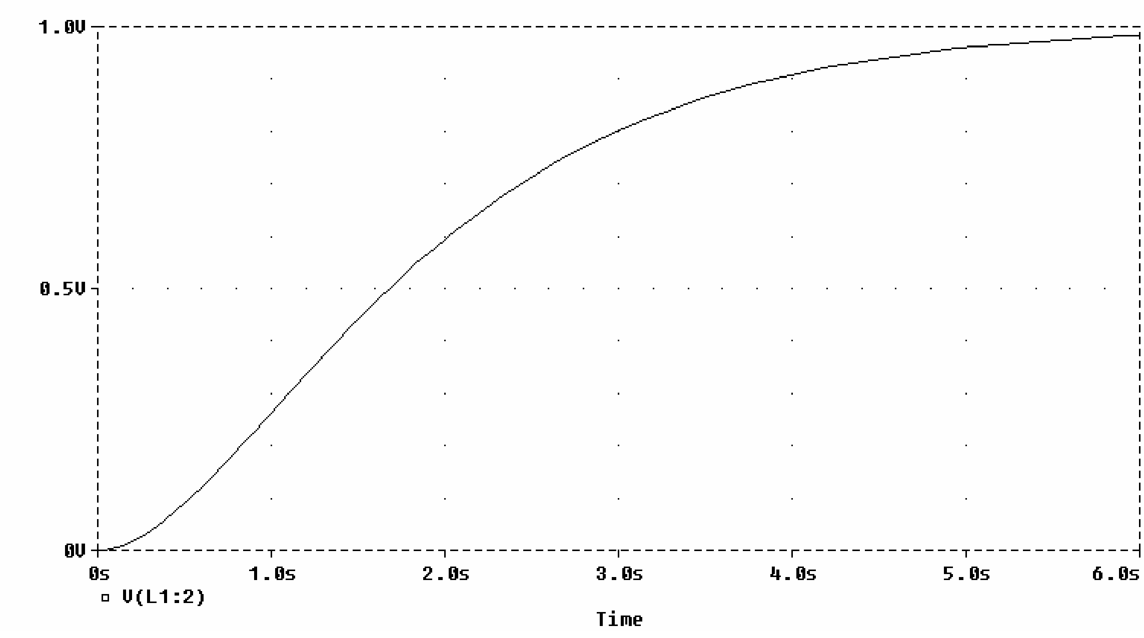

Chapter 8, Solution 69.

The schematic is shown below. The initial values are set as attributes of L1 and C1. We set Print Step to 25 ms and the Final Time to 20s in the transient box. A current marker is inserted at the terminal of L1 to automatically display i(t) after simulation. The result is shown below.

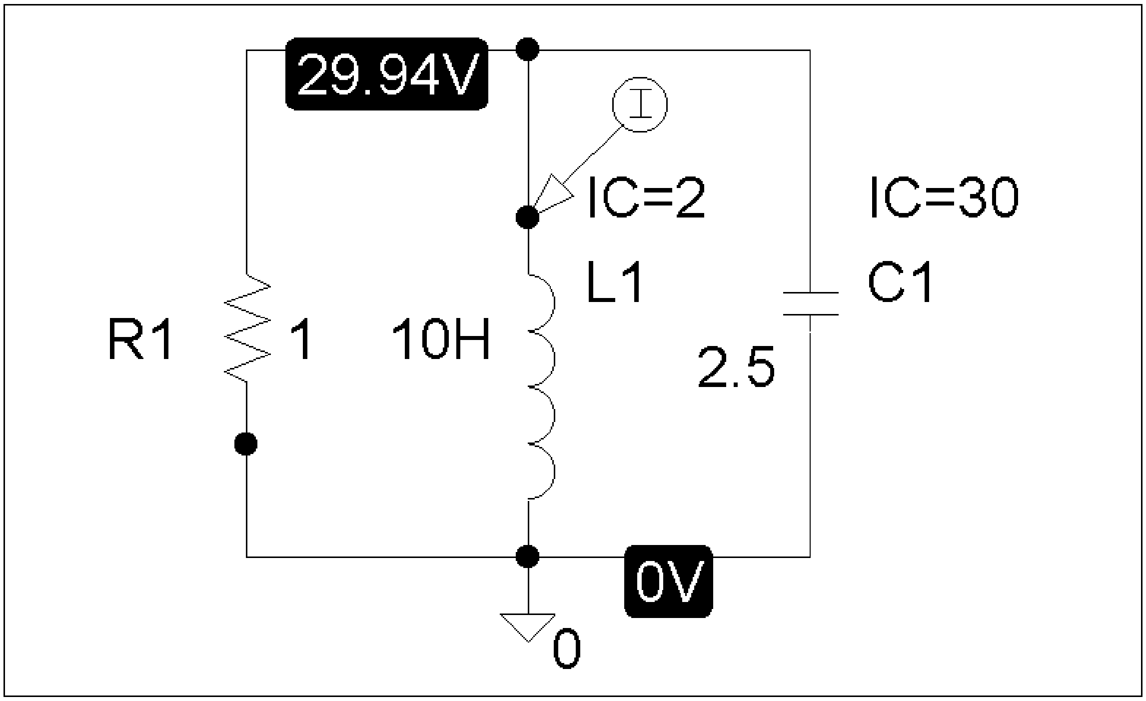

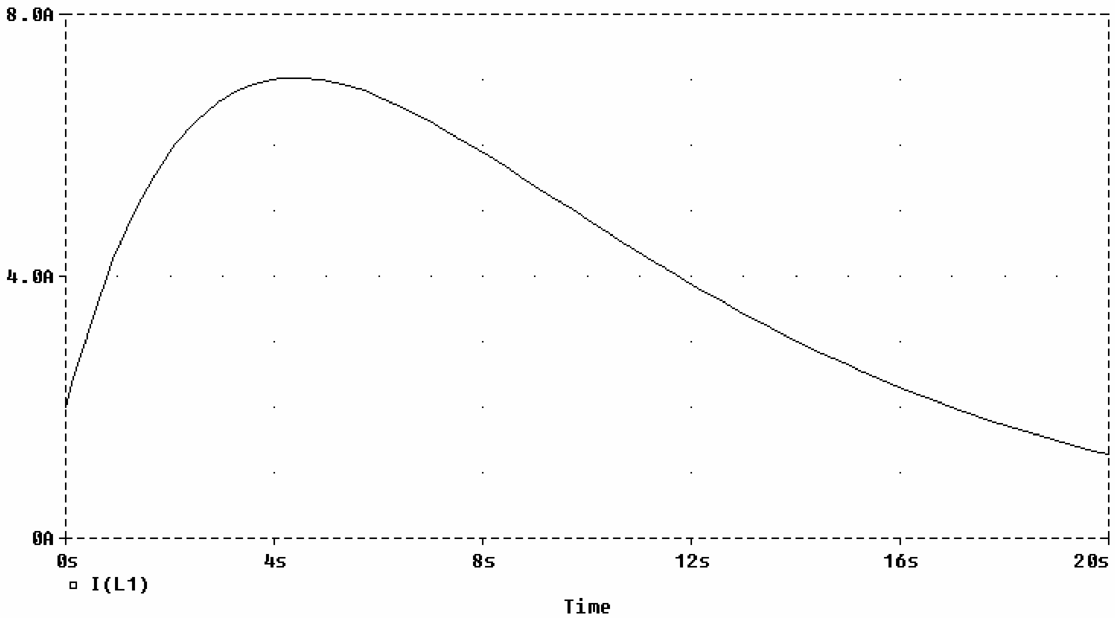

Chapter 8, Solution 70.

The schematic is shown below.

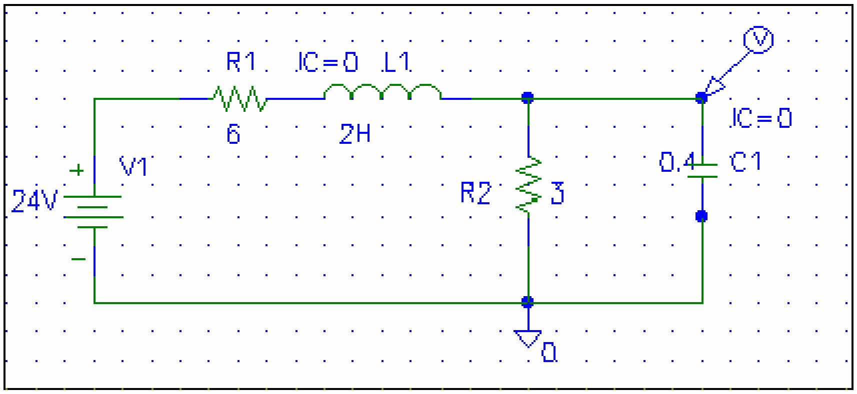

After the circuit is saved and simulated, we obtain the capacitor voltage v(t) as shown below.

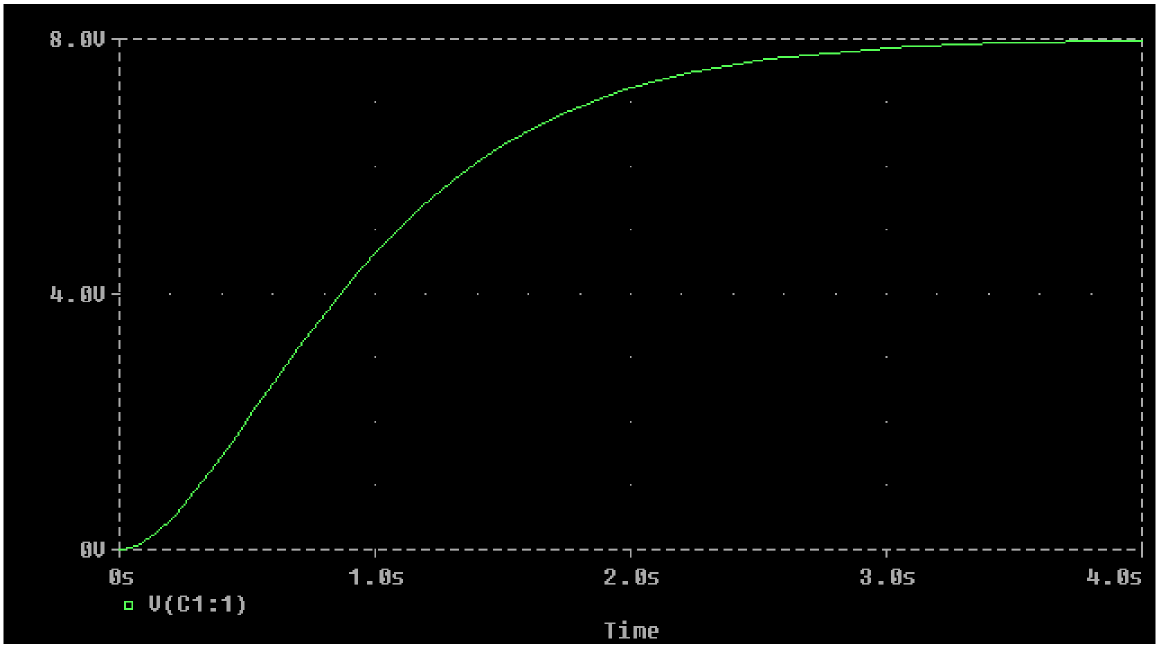

Chapter 8, Solution 71.

The schematic is shown below. We use VPWL and IPWL to model the 39 u(t) V and 13 u(t) A respectively. We set Print Step to 25 ms and Final Step to 4s in the Transient box. A voltage marker is inserted at the terminal of R2 to automatically produce the plot of v(t) after simulation. The result is shown below.

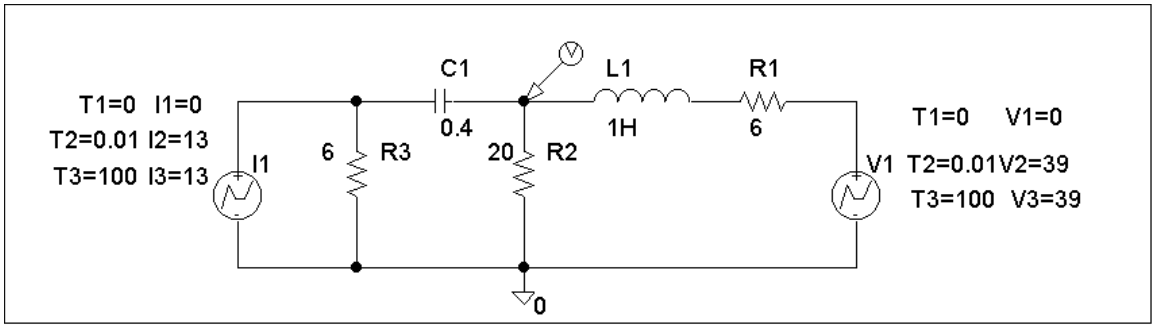

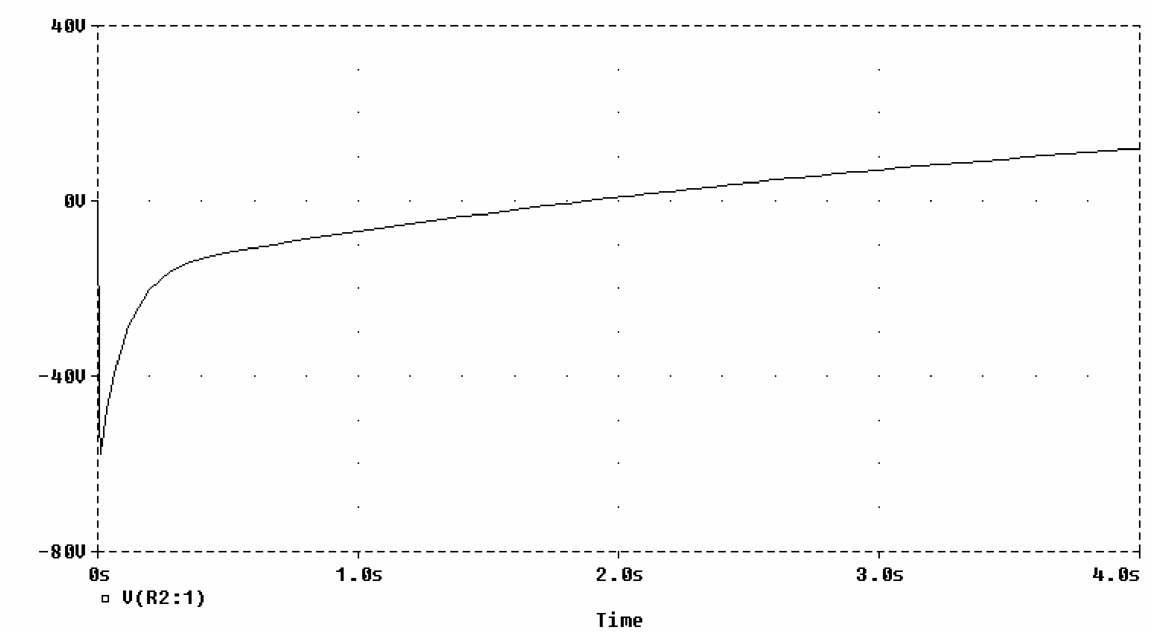

Chapter 8, Solution 72.

When the switch is in position 1, we obtain IC=10 for the capacitor and IC=0 for the inductor. When the switch is in position 2, the schematic of the circuit is shown below.

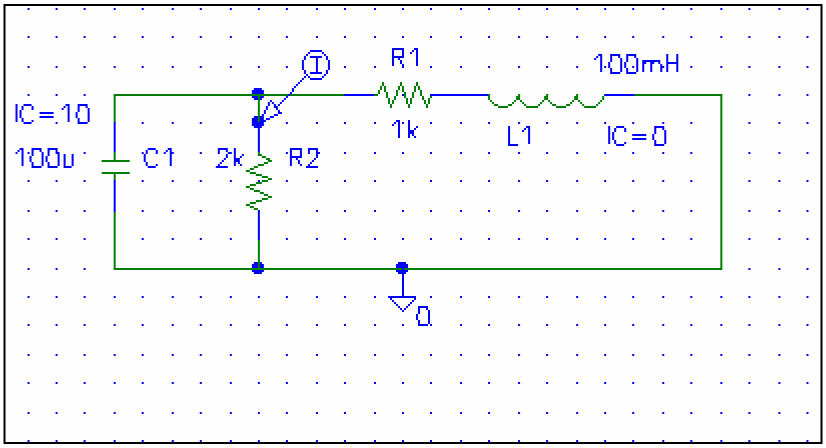

When the circuit is simulated, we obtain i(t) as shown below.

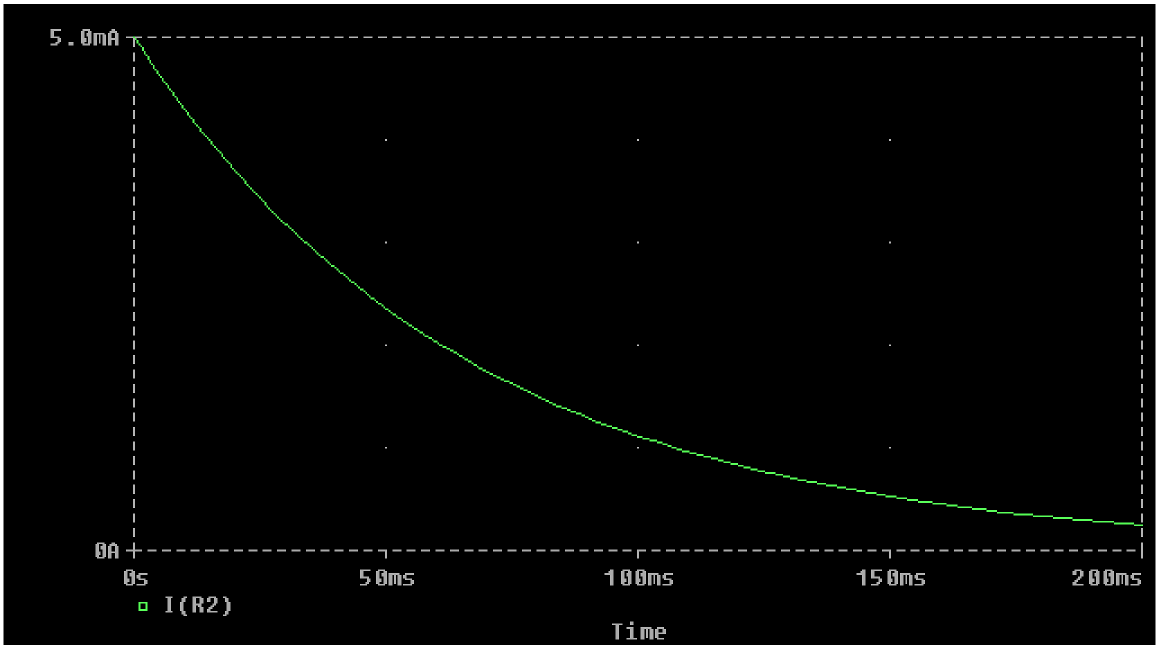

Chapter 8, Solution 73.

(a) For $t < 0$, we have the schematic below. When this is saved and simulated, we obtain the initial inductor current and capacitor voltage as

$$i_L(0) = 3\text{ A} \quad \text{and } v_c(0) = 24\text{ V}.$$

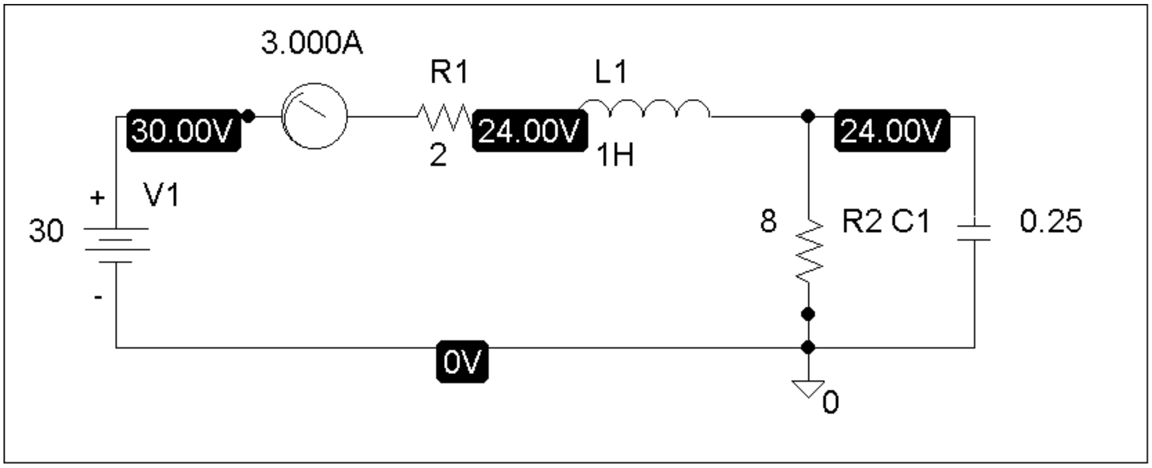

(b) For $t > 0$, we have the schematic shown below. To display i(t) and v(t), we insert current and voltage markers as shown. The initial inductor current and capacitor voltage are also incorporated. In the Transient box, we set Print Step = 25 ms and the Final Time to 4s. After simulation, we automatically have $i_o(t)$ and $v_o(t)$ displayed as shown below.

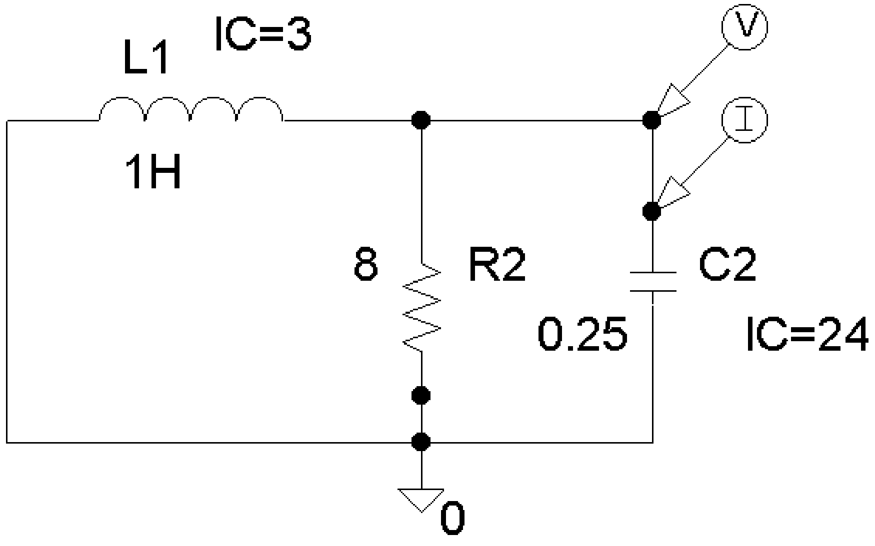

Chapter 8, Solution 74.

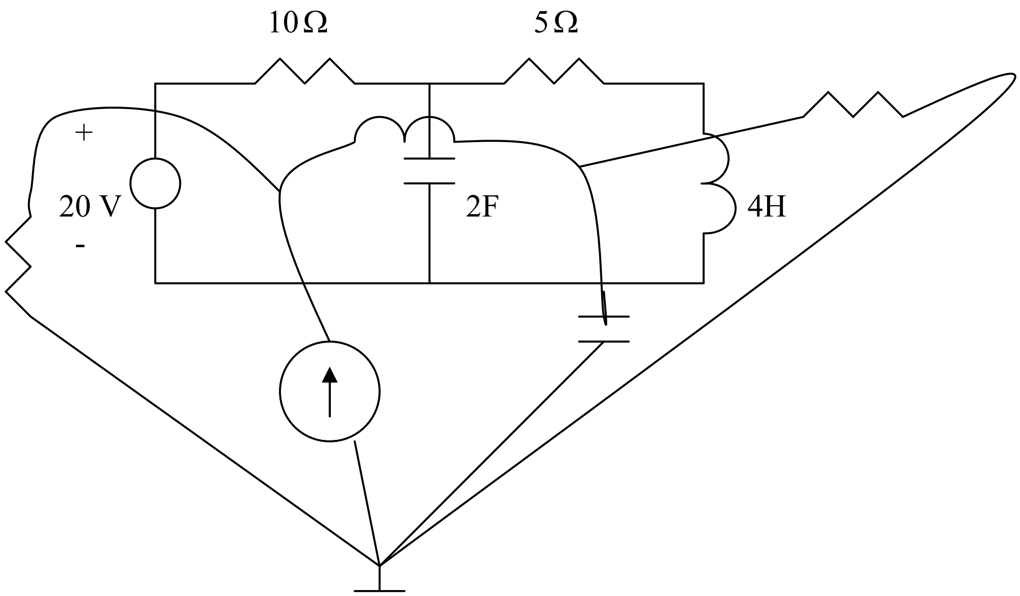

Hence the dual circuit is shown below.

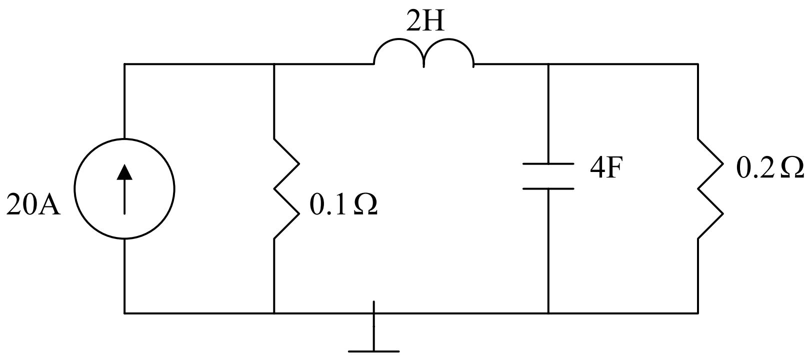

Chapter 8, Solution 75.

The dual circuit is connected as shown in Figure (a). It is redrawn in Figure (b).

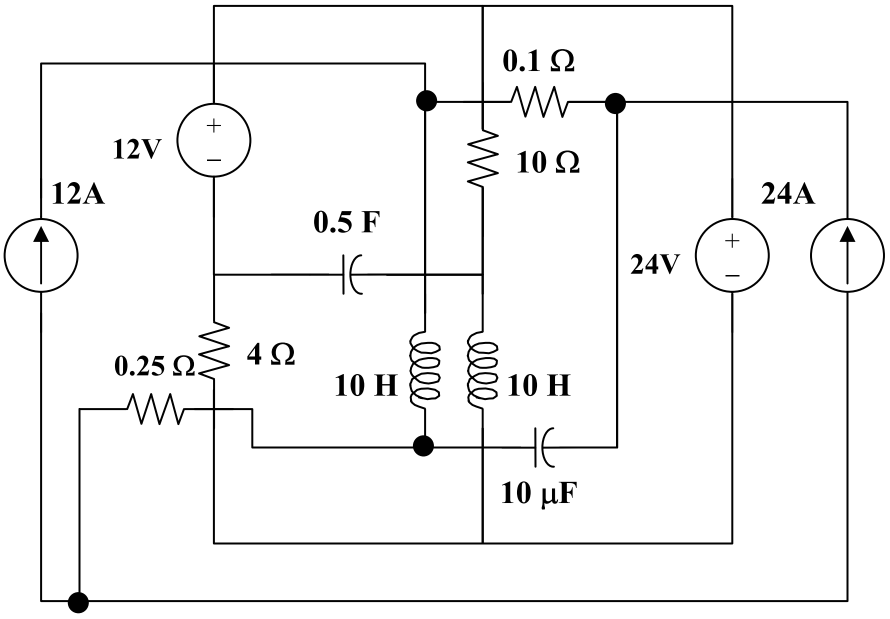

(a)

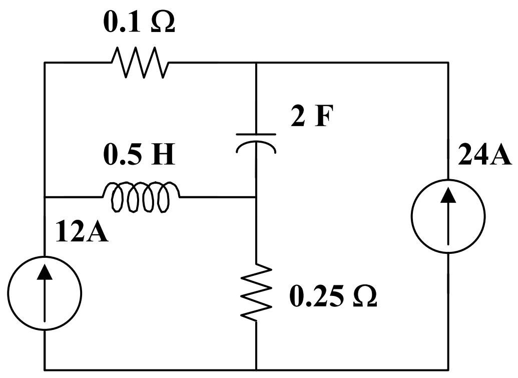

(b)

Chapter 8, Solution 76.

The dual is obtained from the original circuit as shown in Figure (a). It is redrawn in Figure (b).

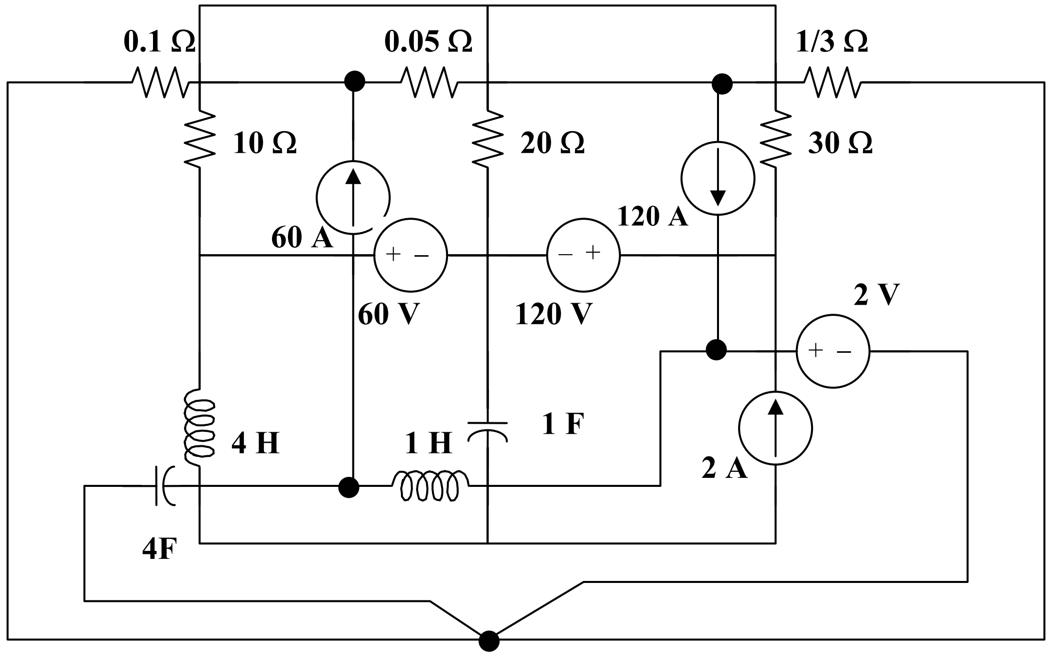

(a)

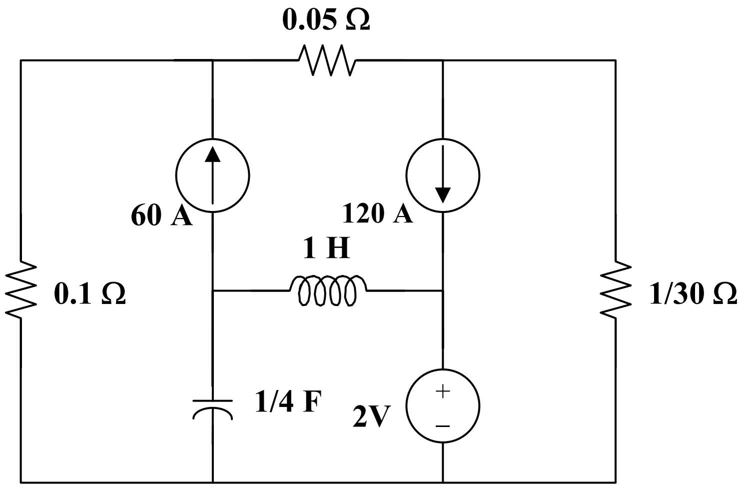

(b)

Chapter 8, Solution 77.

The dual is constructed in Figure (a) and redrawn in Figure (b).

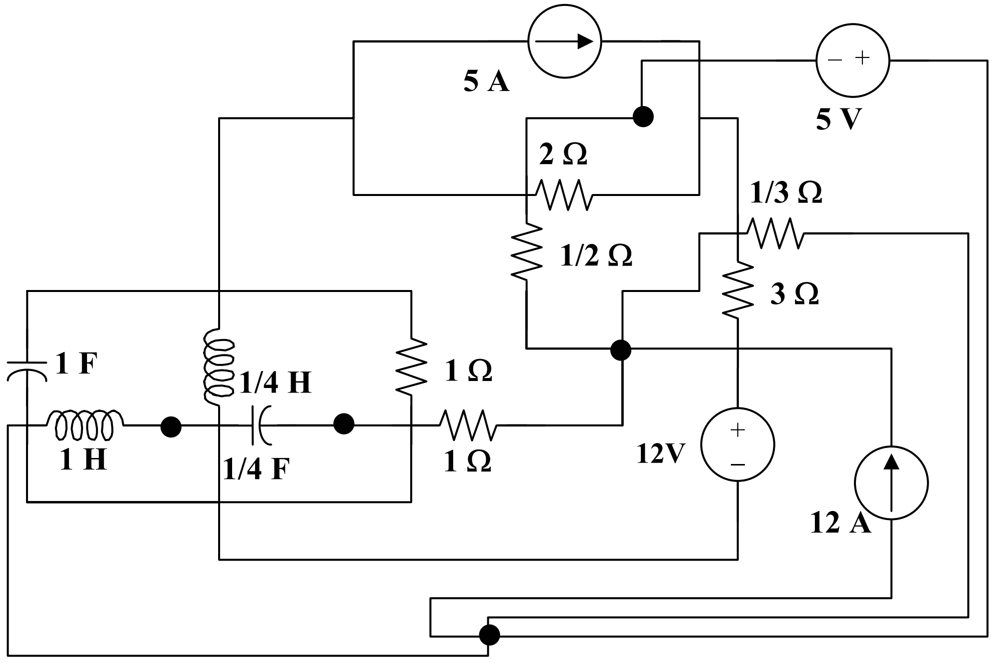

(a)

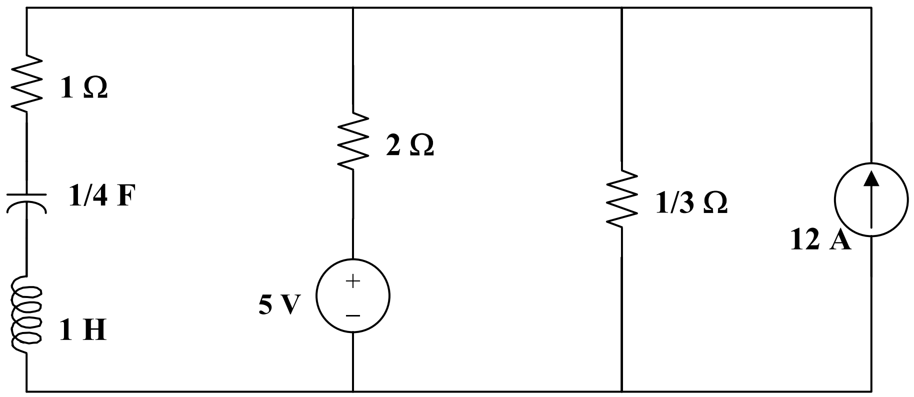

(b)

Chapter 8, Solution 78.

The voltage across the igniter is $v_R = v_C$ since the circuit is a parallel RLC type.

$$v_C(0) = 12, \text{ and } i_L(0) = 0.$$

$$\alpha = 1/(2RC) = 1/(2x3x1/30) = 5$$

$$\omega_o = 1/\sqrt{LC} = 1/\sqrt{60x10^{-3}x1/30} = 22.36$$

$\alpha < \omega_o$ produces an underdamped response.

$$s_{1,2} = -\alpha \pm \sqrt{\alpha^2 - \omega_o^2} = -5 \pm j21.794$$

$$v_C(t) = e^{-5t}(A\cos 21.794t + B\sin 21.794t) \quad (1)$$

$$v_C(0) = 12 = A$$

$$dv_C/dt = -5[(A\cos 21.794t + B\sin 21.794t)e^{-5t}]$$

$$+ 21.794[(-A\sin 21.794t + B\cos 21.794t)e^{-5t}] \quad (2)$$

$$dv_C(0)/dt = -5A + 21.794B$$

But, $dv_C(0)/dt = -[v_C(0) + Ri_L(0)]/(RC) = -(12 + 0)/(1/10) = -120$

Hence, $-120 = -5A + 21.794B$, leads to $B\ (5x12 - 120)/21.794 = -2.753$

At the peak value, $dv_C(t_o)/dt = 0$, i.e.,

$$0 = A + B\tan 21.794t_o + (A21.794/5)\tan 21.794t_o - 21.794B/5$$

$$(B + A21.794/5)\tan 21.794t_o = (21.794B/5) - A$$

$$\tan 21.794t_o = [(21.794B/5) - A]/(B + A21.794/5) = -24/49.55 = -0.484$$

Therefore, $21.7945t_o = |-0.451|$

$$t_o = |-0.451|/21.794 = \underline{\mathbf{20.68\ ms}}$$

Chapter 8, Solution 79.

For critical damping of a parallel RLC circuit,

$$\alpha = \omega_o \qquad \longrightarrow \qquad \frac{1}{2RC} = \frac{1}{\sqrt{LC}}$$

Hence,

$$C = \frac{L}{4R^2} = \frac{0.25}{4x144} = \underline{434\mu\text{F}}$$

Chapter 8, Solution 80.

$$t_1 = 1/|s_1| = 0.1x10^{-3} \text{ leads to } s_1 = -1000/0.1 = -10{,}000$$

$$t_2 = 1/|s_2| = 0.5x10^{-3} \text{ leads to } s_1 = -2{,}000$$

$$s_1 = -\alpha - \sqrt{\alpha^2 - \omega_o^2}$$

$$s_2 = -\alpha + \sqrt{\alpha^2 - \omega_o^2}$$

$$s_1 + s_2 = -2\alpha = -12{,}000, \text{ therefore } \alpha = 6{,}000 = R/(2L)$$

$$L = R/12{,}000 = 60{,}000/12{,}000 = \underline{\mathbf{5H}}$$

$$s_2 = -\alpha + \sqrt{\alpha^2 - \omega_o^2} = -2{,}000$$

$$\alpha - \sqrt{\alpha^2 - \omega_o^2} = 2{,}000$$

$$6{,}000 - \sqrt{\alpha^2 - \omega_o^2} = 2{,}000$$

$$\sqrt{\alpha^2 - \omega_o^2} = 4{,}000$$

$$\alpha^2 - \omega_o^2 = 16x10^6$$

$$\omega_o^2 = \alpha^2 - 16x10^6 = 36x10^6 - 16x10^6$$

$$\omega_o = 10^3\sqrt{20} = 1/\sqrt{LC}$$

$$C = 1/(20x10^6x5) = \underline{\mathbf{10\ nF}}$$

Chapter 8, Solution 81.

$$t = 1/\alpha = 0.25 \text{ leads to } \alpha = 4$$

But, α 1/(2RC) or, $C = 1/(2\alpha R) = 1/(2x4x200) =$ $\underline{\mathbf{625\ \mu F}}$

$$\omega_d = \sqrt{\omega_o^2 - \alpha^2}$$

$$\omega_o^2 = \omega_d^2 + \alpha^2 = (2\pi 4x10^3)^2 + 16 \cong (2\pi 4x10^3 0^2 = 1/(LC)$$

This results in $L = 1/(64\pi^2 x10^6 x625x10^{-6}) =$ $\underline{\mathbf{2.533\ \mu H}}$

Chapter 8, Solution 82.

For t = 0-, v(0) = 0.

For t > 0, the circuit is as shown below.

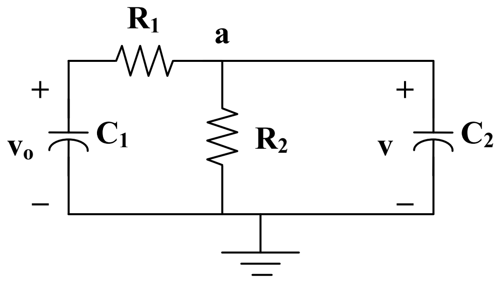

At node a,

$$(v_o - v/R_1 = (v/R_2) + C_2 dv/dt$$

$$v_o = v(1 + R_1/R_2) + R_1 C_2\, dv/dt$$

$$60 = (1 + 5/2.5) + (5x10^6\ x5x10^{-6})dv/dt$$

$$60 = 3v + 25dv/dt$$

$$v(t) = V_s + [Ae^{-3t/25}]$$

where $3V_s = 60$ yields $V_s = 20$

$$v(0) = 0 = 20 + A \text{ or } A = -20$$

$v(t) =$ $\underline{\mathbf{20(1 - e^{-3t/25})V}}$

Chapter 8, Solution 83.

$$i = i_D + Cdv/dt \qquad (1)$$

$$-v_s + iR + Ldi/dt + v = 0 \qquad (2)$$

Substituting (1) into (2),

$$v_s = Ri_D + RCdv/dt + Ldi/dt + LCd^2v/dt^2 + v = 0$$

$$LCd^2v/dt^2 + RCdv/dt + Ri_D + Ldi/dt = v_s$$

$$\underline{\mathbf{d^2v/dt^2 + (R/L)dv/dt + (R/LC)i_D + (1/C)di/dt = v_s/LC}}$$

Chapter 9, Solution 1.

(a) angular frequency $\omega = \underline{\mathbf{10^3\ rad/s}}$

(b) frequency $f = \dfrac{\omega}{2\pi} = \underline{\mathbf{159.2\ Hz}}$

(c) period $T = \dfrac{1}{f} = \underline{\mathbf{6.283\ ms}}$

(d) Since $\sin(A) = \cos(A - 90°)$,

$v_s = 12\sin(10^3 t + 24°) = 12\cos(10^3 t + 24° - 90°)$

v_s in cosine form is $v_s = \underline{\mathbf{12\cos(10^3 t - 66°)\ V}}$

(e) $v_s(2.5\text{ ms}) = 12\sin((10^3)(2.5 \times 10^{-3}) + 24°)$

$= 12\sin(2.5 + 24°) = 12\sin(143.24° + 24°)$

$= \underline{\mathbf{2.65\ V}}$

Chapter 9, Solution 2.

(a) amplitude $= \underline{\mathbf{8\ A}}$

(b) $\omega = 500\pi = \underline{\mathbf{1570.8\ rad/s}}$

(c) $f = \dfrac{\omega}{2\pi} = \underline{\mathbf{250\ Hz}}$

(d) $I_s = 8\angle{-25°}\ A$

$I_s(2\text{ ms}) = 8\cos((500\pi)(2 \times 10^{-3}) - 25°)$

$= 8\cos(\pi - 25°) = 8\cos(155°)$

$= \underline{\mathbf{-7.25\ A}}$

Chapter 9, Solution 3.

(a) $4\sin(\omega t - 30°) = 4\cos(\omega t - 30° - 90°) = \underline{\mathbf{4\cos(\omega t - 120°)}}$

(b) $-2\sin(6t) = \underline{\mathbf{2\cos(6t + 90°)}}$

(c) $-10\sin(\omega t + 20°) = 10\cos(\omega t + 20° + 90°) = \underline{\mathbf{10\cos(\omega t + 110°)}}$

Chapter 9, Solution 4.

(a) $v = 8\cos(7t + 15°) = 8\sin(7t + 15° + 90°) = \underline{\mathbf{8\sin(7t + 105°)}}$

(b) $i = -10\sin(3t - 85°) = 10\cos(3t - 85° + 90°) = \underline{\mathbf{10\cos(3t + 5°)}}$

Chapter 9, Solution 5.

$v_1 = 20\sin(\omega t + 60°) = 20\cos(\omega t + 60° - 90°) = 20\cos(\omega t - 30°)$
$v_2 = 60\cos(\omega t - 10°)$

This indicates that the phase angle between the two signals is **<u>20°</u>** and that **<u>v_1 lags v_2</u>**.

Chapter 9, Solution 6.

(a) $v(t) = 10\cos(4t - 60°)$
$i(t) = 4\sin(4t + 50°) = 4\cos(4t + 50° - 90°) = 4\cos(4t - 40°)$
Thus, **<u>i(t) leads v(t) by 20°</u>**.

(b) $v_1(t) = 4\cos(377t + 10°)$
$v_2(t) = -20\cos(377t) = 20\cos(377t + 180°)$
Thus, **<u>v_2(t) leads v_1(t) by 170°</u>**.

(c) $x(t) = 13\cos(2t) + 5\sin(2t) = 13\cos(2t) + 5\cos(2t - 90°)$
$\mathbf{X} = 13\angle 0° + 5\angle -90° = 13 - j5 = 13.928\angle -21.04°$
$x(t) = 13.928\cos(2t - 21.04°)$
$y(t) = 15\cos(2t - 11.8°)$
phase difference $= -11.8° + 21.04° = 9.24°$
Thus, **<u>y(t) leads x(t) by 9.24°</u>**.

Chapter 9, Solution 7.

If $f(\phi) = \cos\phi + j\sin\phi$,

$$\frac{df}{d\phi} = -\sin\phi + j\cos\phi = j(\cos\phi + j\sin\phi) = jf(\phi)$$

$$\frac{df}{f} = j\,d\phi$$

Integrating both sides

$\ln f = j\phi + \ln A$

$f = Ae^{j\phi} = \cos\phi + j\sin\phi$

$f(0) = A = 1$

i.e. $\underline{\mathbf{f(\phi) = e^{j\phi} = \cos\phi + j\sin\phi}}$

Chapter 9, Solution 8.

(a) $$\frac{15\angle 45°}{3 - j4} + j2 = \frac{15\angle 45°}{5\angle -53.13°} + j2$$
$$= 3\angle 98.13° + j2$$
$$= -0.4245 + j2.97 + j2$$
$$= \underline{\mathbf{-0.4243 + j4.97}}$$

(b) $(2 + j)(3 - j4) = 6 - j8 + j3 + 4 = 10 - j5 = 11.18\angle -26.57°$

$$\frac{8\angle -20°}{(2 + j)(3 - j4)} + \frac{10}{-5 + j12} = \frac{8\angle -20°}{11.18\angle -26.57°} + \frac{(-5 - j12)(10)}{25 + 144}$$
$$= 0.7156\angle 6.57° - 0.2958 - j0.71$$
$$= 0.7109 + j0.08188 - 0.2958 - j0.71$$
$$= \underline{\mathbf{0.4151 - j0.6281}}$$

(c) $10 + (8\angle 50°)(13\angle -68.38°) = 10 + 104\angle -17.38°$
$= \underline{\mathbf{109.25 - j31.07}}$

Chapter 9, Solution 9.

(a) $$2 + \frac{3 + j4}{5 - j8} = 2 + \frac{(3 + j4)(5 + j8)}{25 + 64}$$
$$= 2 + \frac{15 + j24 + j20 - 32}{89}$$
$$= \underline{\mathbf{1.809 + j0.4944}}$$

(b) $$4\angle -10° + \frac{1 - j2}{3\angle 6°} = 4\angle -10° + \frac{2.236\angle -63.43°}{3\angle 6°}$$

$$= 4\angle\text{-}10° + 0.7453\angle\text{-}69.43°$$
$$= 3.939 - j0.6946 + 0.2619 - j0.6978$$
$$= \underline{\mathbf{4.201 - j1.392}}$$

(c) $$\frac{8\angle 10° + 6\angle\text{-}20°}{9\angle 80° - 4\angle 50°} = \frac{7.879 + j1.3892 + 5.638 - j2.052}{1.5628 + j8.863 - 2.571 - j3.064}$$
$$= \frac{13.517 - j0.6629}{-1.0083 + j5.799} = \frac{13.533\angle\text{-}2.81°}{5.886\angle 99.86°}$$
$$= 2.299\angle\text{-}102.67°$$
$$= \underline{\mathbf{-0.5043 - j2.243}}$$

Chapter 9, Solution 10.

(a) $z_1 = 6 - j8,\ \ z_2 = 8.66 - j5,$ and $z_3 = -4 - j6.9282$

$z_1 + z_2 + z_3 = \underline{10.66 - j19.93}$

(b) $\frac{z_1 z_2}{z_3} = \underline{9.999 + j7.499}$

Chapter 9, Solution 11.

(a) $$z_1 z_2 = (\text{-}3 + j4)(12 + j5)$$
$$= \text{-}36 - j15 + j48 - 20$$
$$= \underline{\mathbf{-56 + j33}}$$

(b) $$\frac{z_1}{z_2^*} = \frac{-3 + j4}{12 - j5} = \frac{(-3 + j4)(12 + j5)}{144 + 25} = \underline{\mathbf{-0.3314 + j0.1953}}$$

(c) $$z_1 + z_2 = (\text{-}3 + j4) + (12 + j5) = 9 + j9$$
$$z_1 - z_2 = (\text{-}3 + j4) - (12 + j5) = \text{-}15 - j$$
$$\frac{z_1 + z_2}{z_1 - z_2} = \frac{9(1 + j)}{-(15 + j)} = \frac{-9(1 + j)(15 - j)}{15^2 - 1^2} = \frac{-9(16 + j14)}{226}$$
$$= \underline{\mathbf{-0.6372 - j0.5575}}$$

Chapter 9, Solution 12.

(a) $z_1 z_2 = (-3 + j4)(12 + j5)$
$= -36 - j15 + j48 - 20$
$= \underline{\mathbf{-56 + j33}}$

(b) $\dfrac{z_1}{z_2^*} = \dfrac{-3 + j4}{12 - j5} = \dfrac{(-3 + j4)(12 + j5)}{144 + 25} = \underline{\mathbf{-0.3314 + j0.1953}}$

(c) $z_1 + z_2 = (-3 + j4) + (12 + j5) = 9 + j9$
$z_1 - z_2 = (-3 + j4) - (12 + j5) = -15 - j$
$\dfrac{z_1 + z_2}{z_1 - z_2} = \dfrac{9(1+j)}{-(15+j)} = \dfrac{-9(1+j)(15-j)}{15^2 - 1^2} = \dfrac{-9(16 + j14)}{226}$
$= \underline{\mathbf{-0.6372 - j0.5575}}$

Chapter 9, Solution 13.

(a) $(-0.4324 + j0.4054) + (-0.8425 - j0.2534) = \underline{-1.2749 + j0.1520}$

(b) $\dfrac{50\angle -30^o}{24\angle 150^o} = \underline{-2.0833}$

(c) $(2+j3)(8-j5) - (-4) = \underline{35 + j14}$

Chapter 9, Solution 14.

(a) $\dfrac{3 - j14}{-15 + j11} = \underline{-0.5751 + j0.5116}$

(b) $\dfrac{(62.116 + j231.82 + 138.56 - j80)(60 - j80)}{(67 + j84)(16.96 + j10.5983)} = \dfrac{24186 - 6944.9}{246.06 + j2134.7} = \underline{-1.922 - j11.55}$

(c) $(-2 + j4)^2 \sqrt{(260 - j120)} = \underline{-256.4 - j200.89}$

Chapter 9, Solution 15.

(a) $\begin{vmatrix} 10+j6 & 2-j3 \\ -5 & -1+j \end{vmatrix} = -10 - j6 + j10 - 6 + 10 - j15$

$= \underline{\mathbf{-6 - j11}}$

(b) $\begin{vmatrix} 20\angle -30° & -4\angle -10° \\ 16\angle 0° & 3\angle 45° \end{vmatrix} = 60\angle 15° + 64\angle -10°$

$= 57.96 + j15.529 + 63.03 - j11.114$

$= \underline{\mathbf{120.99 - j4.415}}$

(c) $\begin{array}{|ccc|} 1-j & -j & 0 \\ j & 1 & -j \\ 1 & j & 1+j \\ 1-j & -j & 0 \\ j & 1 & -j \end{array} = 1 + 1 + 0 - 1 - 0 + j^2(1-j) + j^2(1+j)$

$= 1 - 1(1 - j + 1 + j)$

$= 1 - 2 = \underline{\mathbf{-1}}$

Chapter 9, Solution 16.

(a) $-10\cos(4t + 75°) = 10\cos(4t + 75° - 180°)$

$= 10\cos(4t - 105°)$

The phasor form is $\underline{\mathbf{10\angle -105°}}$

(b) $5\sin(20t - 10°) = 5\cos(20t - 10° - 90°)$

$= 5\cos(20t - 100°)$

The phasor form is $\underline{\mathbf{5\angle -100°}}$

(c) $4\cos(2t) + 3\sin(2t) = 4\cos(2t) + 3\cos(2t - 90°)$

The phasor form is $4\angle 0° + 3\angle -90° = 4 - j3 = \underline{\mathbf{5\angle -36.87°}}$

Chapter 9, Solution 17.

(a) Let $\mathbf{A} = 8\angle -30° + 6\angle 0°$

$= 12.928 - j4$

$= 13.533\angle -17.19°$

$a(t) = \underline{\mathbf{13.533\cos(5t + 342.81°)}}$

(b) We know that $-\sin\alpha = \cos(\alpha + 90°)$.

Let $\mathbf{B} = 20\angle 45° + 30\angle(20° + 90°)$
$= 14.142 + j14.142 - 10.261 + j28.19$
$= 3.881 + j42.33$
$= 42.51\angle 84.76°$

$b(t) =$ **$42.51 \cos(120\pi t + 84.76°)$**

(c) Let $\mathbf{C} = 4\angle -90° + 3\angle(-10° - 90°)$
$= -j4 - 0.5209 - j2.954$
$= 6.974\angle 265.72°$

$c(t) =$ **$6.974 \cos(8t + 265.72°)$**

Chapter 9, Solution 18.

(a) $v_1(t) =$ **$60 \cos(t + 15°)$**

(b) $\mathbf{V}_2 = 6 + j8 = 10\angle 53.13°$

$v_2(t) =$ **$10 \cos(40t + 53.13°)$**

(c) $i_1(t) =$ **$2.8 \cos(377t - \pi/3)$**

(d) $\mathbf{I}_2 = -0.5 - j1.2 = 1.3\angle 247.4°$

$i_2(t) =$ **$1.3 \cos(10^3 t + 247.4°)$**

Chapter 9, Solution 19.

(a) $3\angle 10° - 5\angle -30° = 2.954 + j0.5209 - 4.33 + j2.5$
$= -1.376 + j3.021$
$= 3.32\angle 114.49°$

Therefore, $3 \cos(20t + 10°) - 5 \cos(20t - 30°) =$ **$3.32 \cos(20t + 114.49°)$**

(b) $4\angle -90° + 3\angle -45° = -j40 + 21.21 - j21.21$
$= 21.21 - j61.21$
$= 64.78\angle -70.89°$

Therefore, $40 \sin(50t) + 30 \cos(50t - 45°) =$ **$64.78 \cos(50t - 70.89°)$**

(c) Using $\sin\alpha = \cos(\alpha - 90°)$,

$20\angle -90° + 10\angle 60° - 5\angle -110° = -j20 + 5 + j8.66 + 1.7101 + j4.699$
$= 6.7101 - j6.641$
$= 9.44\angle -44.7°$

Therefore, $20 \sin(400t) + 10 \cos(400t + 60°) - 5 \sin(400t - 20°)$
$=$ **$9.44 \cos(400t - 44.7°)$**

Chapter 9, Solution 20.

(a) $V = 4\angle\underline{-60^o - 90^o} - 5\angle 40^o = -3.464 - j2 - 3.83 - j3.2139 = 8.966\angle -4.399^o$

Hence,

$$\underline{v = 8.966\cos(377t - 4.399^o)}$$

(b) $I = 10\angle 0^o + j\omega 8\angle\underline{20^o - 90^o}$, $\quad \omega = 5$, i.e. $I = 10 + 40\angle 20^o = 49.51\angle 16.04^o$

$$\underline{i = 49.51\cos(5t + 16.04^o)}$$

Chapter 9, Solution 21.

(a) $F = 5\angle 15^o - 4\angle\underline{-30^o - 90^o} = 6.8296 + j4.758 = 8.3236\angle 34.86^o$

$$\underline{f(t) = 8.324\cos(30t + 34.86^o)}$$

(b) $G = 8\angle -90^o + 4\angle 50^o = 2.571 - j4.9358 = 5.565\angle -62.49^o$

$$\underline{g(t) = 5.565\cos(t - 62.49^o)}$$

(c) $H = \dfrac{1}{j\omega}\left(10\angle 0^o + 5\angle -90^o\right), \qquad \omega = 40$

i.e. $H = 0.25\angle -90^o + 0.125\angle -180^o = -j0.25 - 0.125 = 0.2795\angle -116.6^o$

$$\underline{h(t) = 0.2795\cos(40t - 116.6^o)}$$

Chapter 9, Solution 22.

Let f(t) $= 10v(t) + 4\dfrac{dv}{dt} - 2\displaystyle\int_{-\infty}^{t} v(t)dt$

$F = 10V + j\omega 4V - \dfrac{2V}{j\omega}, \qquad \omega = 5, \qquad V = 20\angle -30^o$

$F = 10V + j20V - j0.4V = (10 - j19.6)(17.32 - j10) = 440.1\angle -92.97^o$

$$\underline{f(t) = 440.1\cos(5t - 92.97^o)}$$

Chapter 9, Solution 23.

(a) v(t) = **40 cos(ωt – 60°)**

(b) $\mathbf{V} = -30\angle 10° + 50\angle 60°$
$= -4.54 + j38.09$
$= 38.36\angle 96.8°$
v(t) = **38.36 cos(ωt + 96.8°)**

(c) $\mathbf{I} = j6\angle -10° = 6\angle(90° - 10°) = 6\angle 80°$
i(t) = **6 cos(ωt + 80°)**

(d) $\mathbf{I} = \frac{2}{j} + 10\angle -45° = -j2 + 7.071 - j7.071$
$= 11.5\angle -52.06°$
i(t) = **11.5 cos(ωt – 52.06°)**

Chapter 9, Solution 24.

(a)

$$\mathbf{V} + \frac{\mathbf{V}}{j\omega} = 10\angle 0°, \quad \omega = 1$$

$$\mathbf{V}(1 - j) = 10$$

$$\mathbf{V} = \frac{10}{1 - j} = 5 + j5 = 7.071\angle 45°$$

Therefore, v(t) = **7.071 cos(t + 45°)**

(b)

$$j\omega\mathbf{V} + 5\mathbf{V} + \frac{4\mathbf{V}}{j\omega} = 20\angle(10° - 90°), \quad \omega = 4$$

$$\mathbf{V}\left(j4 + 5 + \frac{4}{j4}\right) = 20\angle -80°$$

$$\mathbf{V} = \frac{20\angle -80°}{5 + j3} = 3.43\angle -110.96°$$

Therefore, v(t) = **3.43 cos(4t – 110.96°)**

Chapter 9, Solution 25.

(a)

$$2j\omega\mathbf{I} + 3\mathbf{I} = 4\angle\text{-}45°, \quad \omega = 2$$

$$\mathbf{I}(3 + j4) = 4\angle\text{-}45°$$

$$I = \frac{4\angle\text{-}45°}{3 + j4} = \frac{4\angle\text{-}45°}{5\angle 53.13°} = 0.8\angle\text{-}98.13°$$

Therefore, i(t) = **<u>0.8 cos(2t – 98.13°)</u>**

(b)

$$10\frac{\mathbf{I}}{j\omega} + j\omega\mathbf{I} + 6\mathbf{I} = 5\angle 22°, \quad \omega = 5$$

$$(\text{-}j2 + j5 + 6)\mathbf{I} = 5\angle 22°$$

$$\mathbf{I} = \frac{5\angle 22°}{6 + j3} = \frac{5\angle 22°}{6.708\angle 26.56°} = 0.745\angle\text{-}4.56°$$

Therefore, i(t) = **<u>0.745 cos(5t – 4.56°)</u>**

Chapter 9, Solution 26.

$$j\omega\mathbf{I} + 2\mathbf{I} + \frac{\mathbf{I}}{j\omega} = 1\angle 0°, \quad \omega = 2$$

$$\mathbf{I}\left(j2 + 2 + \frac{1}{j2}\right) = 1$$

$$\mathbf{I} = \frac{1}{2 + j1.5} = 0.4\angle\text{-}36.87°$$

Therefore, i(t) = **<u>0.4 cos(2t – 36.87°)</u>**

Chapter 9, Solution 27.

$$j\omega\mathbf{V} + 50\mathbf{V} + 100\frac{\mathbf{V}}{j\omega} = 110\angle\text{-}10°, \quad \omega = 377$$

$$\mathbf{V}\left(j377 + 50 - \frac{j100}{377}\right) = 110\angle\text{-}10°$$

$$\mathbf{V}(380.6\angle 82.45°) = 110\angle\text{-}10°$$

$$\mathbf{V} = 0.289\angle\text{-}92.45°$$

Therefore, v(t) = **<u>0.289 cos(377t – 92.45°)</u>**.

Chapter 9, Solution 28.

$$i(t) = \frac{v_s(t)}{R} = \frac{110\cos(377t)}{8} = \underline{\mathbf{13.75\ cos(377t)\ A}}.$$

Chapter 9, Solution 29.

$$\mathbf{Z} = \frac{1}{j\omega C} = \frac{1}{j(10^6)(2\times 10^{-6})} = -j0.5$$

$$\mathbf{V} = \mathbf{IZ} = (4\angle 25°)(0.5\angle -90°) = 2\angle -65°$$

Therefore $\quad v(t) = \underline{\mathbf{2\ sin(10^6 t - 65°)\ V}}$.

Chapter 9, Solution 30.

$$\mathbf{Z} = j\omega L = j(500)(4\times 10^{-3}) = j2$$

$$\mathbf{I} = \frac{\mathbf{V}}{\mathbf{Z}} = \frac{60\angle -65°}{2\angle 90°} = 30\angle -155°$$

Therefore, $\quad i(t) = \underline{\mathbf{30\ cos(500t - 155°)\ A}}$.

Chapter 9, Solution 31.

$$i(t) = 10\sin(\omega t + 30°) = 10\cos(\omega t + 30° - 90°) = 10\cos(\omega t - 60°)$$

Thus, $\quad \mathbf{I} = 10\angle -60°$

$$v(t) = -65\cos(\omega t + 120°) = 65\cos(\omega t + 120° - 180°) = 65\cos(\omega t - 60°)$$

Thus, $\quad \mathbf{V} = 65\angle -60°$

$$\mathbf{Z} = \frac{\mathbf{V}}{\mathbf{I}} = \frac{65\angle -60°}{10\angle -60°} = 6.5\ \Omega$$

Since **V** and **I** are in phase, the element is a **resistor** with R = **6.5 Ω**.

Chapter 9, Solution 32.

$\mathbf{V} = 180\angle 10°, \qquad \mathbf{I} = 12\angle\text{-}30°, \qquad \omega = 2$

$$\mathbf{Z} = \frac{\mathbf{V}}{\mathbf{I}} = \frac{180\angle 10°}{12\angle\text{-}30°} = 15\angle 40° = 11.49 + j9.642\,\Omega$$

One element is a resistor with R = **<u>11.49 Ω</u>**.
The other element is an inductor with ωL = 9.642 or L = **<u>4.821 H</u>**.

Chapter 9, Solution 33.

$$110 = \sqrt{v_R^2 + v_L^2}$$
$$v_L = \sqrt{110^2 - v_R^2}$$
$$v_L = \sqrt{110^2 - 85^2} = \underline{\mathbf{69.82\ V}}$$

Chapter 9, Solution 34.

$$v_o = 0 \text{ if } \omega L = \frac{1}{\omega C} \longrightarrow \omega = \frac{1}{\sqrt{LC}}$$

$$\omega = \frac{1}{\sqrt{(5\times 10^{-3})(2\times 10^{-3})}} = \underline{\mathbf{100\ rad/s}}$$

Chapter 9, Solution 35.

$$\mathbf{V}_s = 5\angle 0°$$
$$j\omega L = j(2)(1) = j2$$
$$\frac{1}{j\omega C} = \frac{1}{j(2)(0.25)} = \text{-}j2$$

$$\mathbf{V}_o = \frac{j2}{2 - j2 + j2}\mathbf{V}_s = \frac{j2}{2}5\angle 0° = (1\angle 90°)(5\angle 0°) = 5\angle 90°$$

Thus, $v_o(t) = 5\cos(2t + 90°) = \underline{\mathbf{-5\sin(2t)\ V}}$

Chapter 9, Solution 36.

Let Z be the input impedance at the source.

100 mH $\longrightarrow$ $j\omega L = j200x100x10^{-3} = j20$

10μF $\longrightarrow$ $\dfrac{1}{j\omega C} = \dfrac{1}{j10x10^{-6}x200} = -j500$

1000//-j500 = 200 –j400
1000//(j20 + 200 –j400) = 242.62 –j239.84

$$Z = 2242.62 - j239.84 = 2255\angle -6.104^o$$

$$I = \frac{60\angle -10^o}{2255\angle -6.104^o} = 26.61\angle -3.896^o \text{ mA}$$

$$i = \underline{266.1\cos(200t - 3.896^o)}$$

Chapter 9, Solution 37.

$$j\omega L = j(5)(1) = j5$$

$$\frac{1}{j\omega C} = \frac{1}{j(5)(0.2)} = -j$$

Let $\mathbf{Z}_1 = -j$, $\mathbf{Z}_2 = 2 \parallel j5 = \dfrac{(2)(j5)}{2 + j5} = \dfrac{j10}{2 + j5}$

Then, $\mathbf{I}_x = \dfrac{\mathbf{Z}_2}{\mathbf{Z}_1 + \mathbf{Z}_2}\mathbf{I}_s$, where $\mathbf{I}_s = 2\angle 0°$

$$\mathbf{I}_x = \frac{\dfrac{j10}{2 + j5}}{-j + \dfrac{j10}{2 + j5}}(2) = \frac{j20}{5 + j8} = 2.12\angle 32°$$

Therefore, $i_x(t) =$ **<u>2.12 sin(5t + 32°) A</u>**

Chapter 9, Solution 38.

(a) $\frac{1}{6}\text{F} \longrightarrow \frac{1}{j\omega C} = \frac{1}{j(3)(1/6)} = \text{-j2}$

$$\mathbf{I} = \frac{\text{- j2}}{4 - \text{j2}}(10\angle 45°) = 4.472\angle\text{-}18.43°$$

Hence, i(t) = **<u>4.472 cos(3t – 18.43°) A</u>**

$$\mathbf{V} = 4\mathbf{I} = (4)(4.472\angle\text{-}18.43°) = 17.89\angle\text{-}18.43°$$

Hence, v(t) = **<u>17.89 cos(3t – 18.43°) V</u>**

(b) $\frac{1}{12}\text{F} \longrightarrow \frac{1}{j\omega C} = \frac{1}{j(4)(1/12)} = \text{-j3}$

$3\text{ H} \longrightarrow j\omega L = j(4)(3) = \text{j12}$

$$\mathbf{I} = \frac{\mathbf{V}}{\mathbf{Z}} = \frac{50\angle 0°}{4 - \text{j3}} = 10\angle 36.87°$$

Hence, i(t) = **<u>10 cos(4t + 36.87°) A</u>**

$$\mathbf{V} = \frac{\text{j12}}{8 + \text{j12}}(50\angle 0°) = 41.6\angle 33.69°$$

Hence, v(t) = **<u>41.6 cos(4t + 33.69°) V</u>**

Chapter 9, Solution 39.

$$\mathbf{Z} = 8 + \text{j5} \,||\, (\text{-j10}) = 8 + \frac{(\text{j5})(\text{-j10})}{\text{j5} - \text{j10}} = 8 + \text{j10}$$

$$\mathbf{I} = \frac{\mathbf{V}}{\mathbf{Z}} = \frac{40\angle 0°}{8 + \text{j10}} = \frac{20}{6.403\angle 51.34°} = 3.124\angle\text{-}51.34°$$

$$\mathbf{I}_1 = \frac{\text{- j10}}{\text{j5} - \text{j10}}\mathbf{I} = 2\mathbf{I} = 6.248\angle\text{-}51.34°$$

$$\mathbf{I}_2 = \frac{\text{j5}}{\text{- j5}}\mathbf{I} = \text{-}\mathbf{I} = 3.124\angle 128.66°$$

Therefore, $i_1(t) =$ **<u>6.248 cos(120πt – 51.34°) A</u>**

$i_2(t) =$ **<u>3.124 cos(120πt + 128.66°) A</u>**

Chapter 9, Solution 40.

(a) For $\omega = 1$,

$1\text{ H} \longrightarrow j\omega L = j(1)(1) = j$

$0.05\text{ F} \longrightarrow \dfrac{1}{j\omega C} = \dfrac{1}{j(1)(0.05)} = \text{-}j20$

$$\mathbf{Z} = j + 2 \,||\, (\text{-}j20) = j + \frac{\text{-}j40}{2 - j20} = 1.98 + j0.802$$

$$\mathbf{I}_o = \frac{\mathbf{V}}{\mathbf{Z}} = \frac{4\angle 0°}{1.98 + j0.802} = \frac{4\angle 0°}{2.136\angle 22.05°} = 1.872\angle\text{-}22.05°$$

Hence, $i_o(t) =$ **<u>1.872 cos(t – 22.05°) A</u>**

(b) For $\omega = 5$,

$1\text{ H} \longrightarrow j\omega L = j(5)(1) = j5$

$0.05\text{ F} \longrightarrow \dfrac{1}{j\omega C} = \dfrac{1}{j(5)(0.05)} = \text{-}j4$

$$\mathbf{Z} = j5 + 2 \,||\, (\text{-}j4) = j5 + \frac{\text{-}j4}{1 - j2} = 1.6 + j4.2$$

$$\mathbf{I}_o = \frac{\mathbf{V}}{\mathbf{Z}} = \frac{4\angle 0°}{1.6 + j4} = \frac{4\angle 0°}{4.494\angle 69.14°} = 0.89\angle\text{-}69.14°$$

Hence, $i_o(t) =$ **<u>0.89 cos(5t – 69.14°) A</u>**

(c) For $\omega = 10$,

$1\text{ H} \longrightarrow j\omega L = j(10)(1) = j10$

$0.05\text{ F} \longrightarrow \dfrac{1}{j\omega C} = \dfrac{1}{j(10)(0.05)} = \text{-}j2$

$$\mathbf{Z} = j10 + 2 \,||\, (\text{-}j2) = j10 + \frac{\text{-}j4}{2 - j2} = 1 + j9$$

$$\mathbf{I}_o = \frac{\mathbf{V}}{\mathbf{Z}} = \frac{4\angle 0°}{1 + j9} = \frac{4\angle 0°}{9.055\angle 83.66°} = 0.4417\angle\text{-}83.66°$$

Hence, $i_o(t) =$ **<u>0.4417 cos(10t – 83.66°) A</u>**

Chapter 9, Solution 41.

$$\omega = 1,$$

$$1\text{ H} \longrightarrow \quad j\omega L = j(1)(1) = j$$

$$1\text{ F} \longrightarrow \quad \frac{1}{j\omega C} = \frac{1}{j(1)(1)} = \text{-}j$$

$$\mathbf{Z} = 1 + (1 + j) \,||\, (\text{-}j) = 1 + \frac{\text{-}j + 1}{1} = 2 - j$$

$$\mathbf{I} = \frac{\mathbf{V}_s}{\mathbf{Z}} = \frac{10}{2 - j}, \qquad \mathbf{I}_c = (1 + j)\,\mathbf{I}$$

$$\mathbf{V} = (\text{-}j)(1 + j)\,\mathbf{I} = (1 - j)\,\mathbf{I} = \frac{(1 - j)(10)}{2 - j} = 6.325\angle\text{-}18.43°$$

Thus, $\quad v(t) = \underline{\mathbf{6.325\cos(t - 18.43°)\ V}}$

Chapter 9, Solution 42.

$$\omega = 200$$

$$50\ \mu\text{F} \longrightarrow \quad \frac{1}{j\omega C} = \frac{1}{j(200)(50 \times 10^{-6})} = \text{-}j100$$

$$0.1\text{ H} \longrightarrow \quad j\omega L = j(200)(0.1) = j20$$

$$50 \,||\, \text{-}j100 = \frac{(50)(\text{-}j100)}{50 - j100} = \frac{\text{-}j100}{1\text{-}j2} = 40 - j20$$

$$\mathbf{V}_o = \frac{j20}{j20 + 30 + 40 - j20}(60\angle 0°) = \frac{j20}{70}(60\angle 0°) = 17.14\angle 90°$$

Thus, $\quad v_o(t) = \underline{\mathbf{17.14\sin(200t + 90°)\ V}}$

or $\quad v_o(t) = \underline{\mathbf{17.14\cos(200t)\ V}}$

Chapter 9, Solution 43.

$$\omega = 2$$

$$1\text{ H} \longrightarrow j\omega L = j(2)(1) = j2$$

$$1\text{ F} \longrightarrow \frac{1}{j\omega C} = \frac{1}{j(2)(1)} = -j0.5$$

$$\mathbf{I}_o = \frac{j2 - j0.5}{j2 - j0.5 + 1}\mathbf{I} = \frac{j1.5}{1 + j1.5}4\angle 0° = 3.328\angle 33.69°$$

Thus, $i_o(t) =$ **<u>3.328 cos(2t + 33.69°) A</u>**

Chapter 9, Solution 44.

$$\omega = 200$$

$$10\text{ mH} \longrightarrow j\omega L = j(200)(10\times 10^{-3}) = j2$$

$$5\text{ mF} \longrightarrow \frac{1}{j\omega C} = \frac{1}{j(200)(5\times 10^{-3})} = -j$$

$$\mathbf{Y} = \frac{1}{4} + \frac{1}{j2} + \frac{1}{3-j} = 0.25 - j0.5 + \frac{3+j}{10} = 0.55 - j0.4$$

$$\mathbf{Z} = \frac{1}{\mathbf{Y}} = \frac{1}{0.55 - j0.4} = 1.1892 + j0.865$$

$$\mathbf{I} = \frac{6\angle 0°}{5 + \mathbf{Z}} = \frac{6\angle 0°}{6.1892 + j0.865} = 0.96\angle -7.956°$$

Thus, $i(t)$ = **<u>0.96 cos(200t – 7.956°) A</u>**

Chapter 9, Solution 45.

We obtain I_o by applying the principle of current division twice.

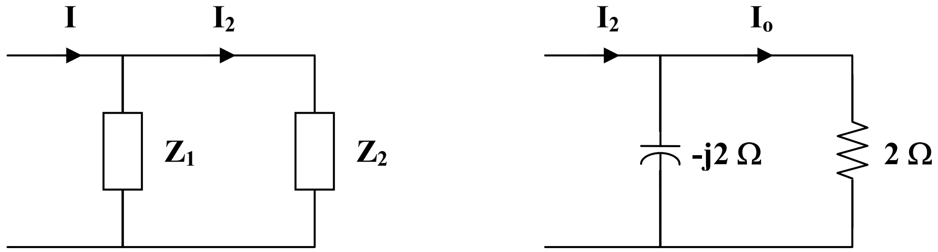

(a) (b)

$$\mathbf{Z}_1 = \text{-j}2, \qquad \mathbf{Z}_2 = j4 + (\text{-j}2) \,||\, 2 = j4 + \frac{\text{- j}4}{2 \text{ - j}2} = 1 + j3$$

$$\mathbf{I}_2 = \frac{\mathbf{Z}_1}{\mathbf{Z}_1 + \mathbf{Z}_2}\mathbf{I} = \frac{\text{- j}2}{\text{- j}2 + 1 + j3}(5\angle 0°) = \frac{\text{- j}10}{1 + j}$$

$$\mathbf{I}_o = \frac{\text{- j}2}{2 \text{ - j}2}\mathbf{I}_2 = \left(\frac{\text{- j}}{1 \text{ - j}}\right)\left(\frac{\text{- j}10}{1 + j}\right) = \frac{\text{-}10}{1+1} = \underline{\mathbf{-5\ A}}$$

Chapter 9, Solution 46.

$$i_s = 5\cos(10t + 40°) \longrightarrow \mathbf{I}_s = 5\angle 40°$$

$$0.1\text{ F} \longrightarrow \frac{1}{j\omega C} = \frac{1}{j(10)(0.1)} = \text{-j}$$

$$0.2\text{ H} \longrightarrow j\omega L = j(10)(0.2) = j2$$

Let $\mathbf{Z}_1 = 4 \,||\, j2 = \frac{j8}{4 + j2} = 0.8 + j1.6,$ $\qquad \mathbf{Z}_2 = 3 - j$

$$\mathbf{I}_o = \frac{\mathbf{Z}_1}{\mathbf{Z}_1 + \mathbf{Z}_2}\mathbf{I}_s = \frac{0.8 + j1.6}{3.8 + j0.6}(5\angle 40°)$$

$$\mathbf{I}_o = \frac{(1.789\angle 63.43°)(5\angle 40°)}{3.847\angle 8.97°} = 2.325\angle 94.46°$$

Thus, $i_o(t) =$ **<u>2.325 cos(10t + 94.46°) A</u>**

Chapter 9, Solution 47.

First, we convert the circuit into the frequency domain.

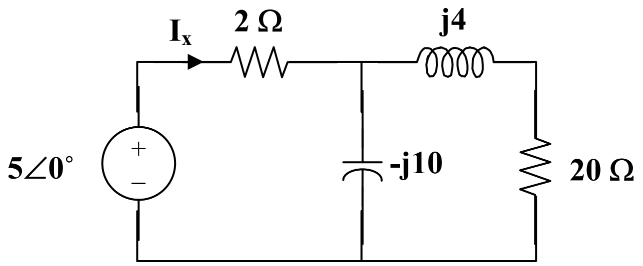

$$I_x = \frac{5}{2 + \frac{-j10(20 + j4)}{-j10 + 20 + j4}} = \frac{5}{2 + 4.588 - j8.626} = \frac{5}{10.854\angle -52.63^\circ} = 0.4607\angle 52.63^\circ$$

$i_s(t)$ = **<u>0.4607cos(2000t +52.63°) A</u>**

Chapter 9, Solution 48.

Converting the circuit to the frequency domain, we get:

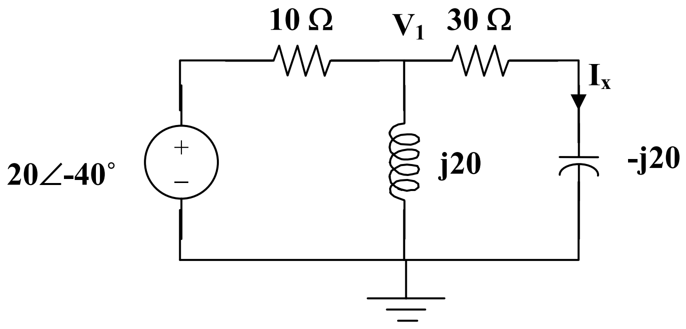

We can solve this using nodal analysis.

$$\frac{V_1 - 20\angle -40°}{10} + \frac{V_1 - 0}{j20} + \frac{V_1 - 0}{30 - j20} = 0$$

$$V_1(0.1 - j0.05 + 0.02307 + j0.01538) = 2\angle -40°$$

$$V_1 = \frac{2\angle 40°}{0.12307 - j0.03462} = 15.643\angle -24.29°$$

$$I_x = \frac{15.643\angle -24.29°}{30 - j20} = 0.4338\angle 9.4°$$

$$i_x = \underline{0.4338\sin(100t + 9.4°)\,A}$$

Chapter 9, Solution 49.

$$\mathbf{Z}_T = 2 + j2 \,||\, (1 - j) = 2 + \frac{(j2)(1 - j)}{1 + j} = 4$$

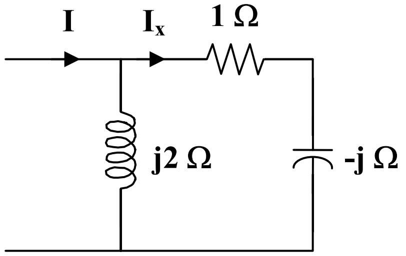

$$\mathbf{I}_x = \frac{j2}{j2 + 1 - j}\mathbf{I} = \frac{j2}{1 + j}\mathbf{I}, \qquad \text{where } \mathbf{I}_x = 0.5\angle 0° = \frac{1}{2}$$

$$\mathbf{I} = \frac{1 + j}{j2}\mathbf{I}_x = \frac{1 + j}{j4}$$

$$\mathbf{V}_s = \mathbf{I}\,\mathbf{Z}_T = \frac{1 + j}{j4}(4) = \frac{1 + j}{j} = 1 - j = 1.414\angle\text{-}45°$$

$v_s(t) =$ **$\underline{1.414\sin(200t - 45°)\ V}$**

Chapter 9, Solution 50.

Since ω = 100, the inductor = j100x0.1 = j10 Ω and the capacitor = 1/(j100x10^{-3}) = -j10Ω.

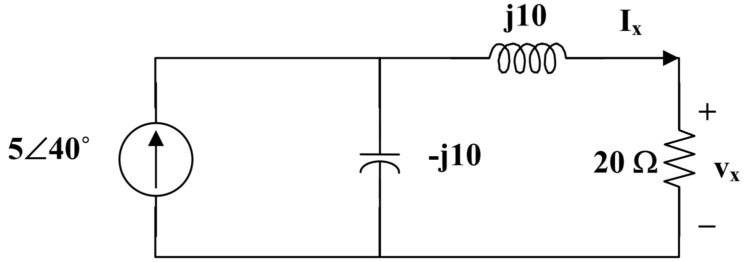

Using the current dividing rule:

$$I_x = \frac{-j10}{-j10 + 20 + j10} 5\angle 40° = -j2.5\angle 40° = 2.5\angle -50°$$

$$V_x = 20I_x = 50\angle -50°$$

$$v_x = \underline{50\cos(100t - 50°)\,V}$$

Chapter 9, Solution 51.

$$0.1\text{ F} \longrightarrow \frac{1}{j\omega C} = \frac{1}{j(2)(0.1)} = \text{-j5}$$

$$0.5\text{ H} \longrightarrow j\omega L = j(2)(0.5) = j$$

The current **I** through the 2-Ω resistor is

$$\mathbf{I} = \frac{1}{1 - j5 + j + 2}\mathbf{I}_s = \frac{\mathbf{I}_s}{3 - j4}, \qquad \text{where } \mathbf{I} = 10\angle 0°$$

$$\mathbf{I}_s = (10)(3 - j4) = 50\angle\text{-}53.13°$$

Therefore,

$i_s(t) =$ **50 cos(2t – 53.13°) A**

Chapter 9, Solution 52.

$$5 \,||\, j5 = \frac{j25}{5 + j5} = \frac{j5}{1 + j} = 2.5 + j2.5$$

$$\mathbf{Z}_1 = 10, \qquad \mathbf{Z}_2 = \text{-j5} + 2.5 + j2.5 = 2.5 - j2.5$$

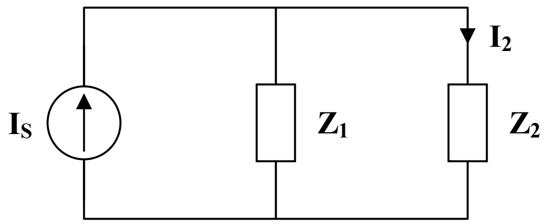

$$\mathbf{I}_2 = \frac{\mathbf{Z}_1}{\mathbf{Z}_1 + \mathbf{Z}_2}\mathbf{I}_s = \frac{10}{12.5 - j2.5}\mathbf{I}_s = \frac{4}{5 - j}\mathbf{I}_s$$

$$\mathbf{V}_o = \mathbf{I}_2\,(2.5 + j2.5)$$

$$8\angle 30° = \left(\frac{4}{5 - j}\right)\mathbf{I}_s\,(2.5)(1 + j) = \frac{10\,(1 + j)}{5 - j}\mathbf{I}_s$$

$$\mathbf{I}_s = \frac{(8\angle 30°)(5 - j)}{10\,(1 + j)} = \underline{\mathbf{2.884\angle\text{-}26.31°\ A}}$$

Chapter 9, Solution 53.

Convert the delta to wye subnetwork as shown below.

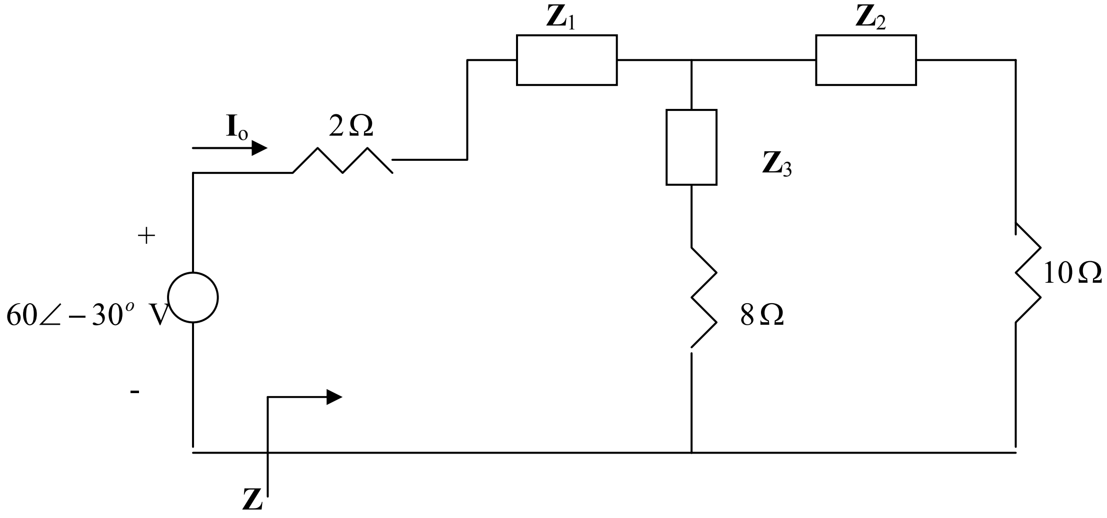

$$Z_1 = \frac{-j2x4}{10 - j2} = 0.1532 - j0.7692, \qquad Z_2 = \frac{j6x4}{10 - j2} = -0.4615 + j2.3077,$$

$$Z_3 = \frac{12}{10 - j2} = 1.1538 + j0.2308$$

$$(Z_3 + 8)//(Z_2 + 10) = (9.1538 + j0.2308)//(9.5385 + j2.3077) = 4.726 + j0.6062$$

$$Z = 2 + Z_1 + 4.726 + j0.6062 = 6.878 - j0.163$$

$$I_o = \frac{60\angle -30^o}{Z} = \frac{60\angle -30^o}{6.88\angle -1.3575^o} = \underline{8.721\angle -28.64^o\ \text{A}}$$

Chapter 9, Solution 54.

Since the left portion of the circuit is twice as large as the right portion, the equivalent circuit is shown below.

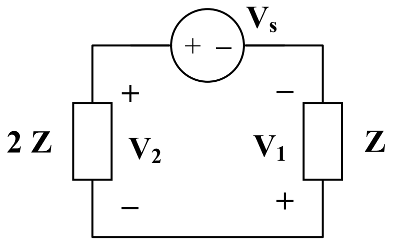

$$\mathbf{V}_1 = \mathbf{I}_o(1-j) = 2(1-j)$$
$$\mathbf{V}_2 = 2\mathbf{V}_1 = 4(1-j)$$
$$\mathbf{V}_s = \mathbf{V}_1 + \mathbf{V}_2 = 6(1-j)$$
$$\mathbf{V}_s = \underline{\mathbf{8.485\angle\text{-}45^\circ\ V}}$$

Chapter 9, Solution 55.

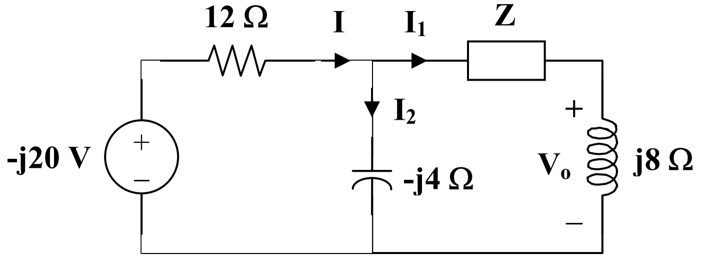

$$\mathbf{I}_1 = \frac{\mathbf{V}_o}{j8} = \frac{4}{j8} = \text{-}j0.5$$

$$\mathbf{I}_2 = \frac{\mathbf{I}_1(\mathbf{Z}+j8)}{-j4} = \frac{(\text{-}j0.5)(\mathbf{Z}+j8)}{-j4} = \frac{\mathbf{Z}}{8} + j$$

$$\mathbf{I} = \mathbf{I}_1 + \mathbf{I}_2 = \text{-}j0.5 + \frac{\mathbf{Z}}{8} + j = \frac{\mathbf{Z}}{8} + j0.5$$

$$-j20 = 12\mathbf{I} + \mathbf{I}_1(\mathbf{Z}+j8)$$

$$-j20 = 12\left(\frac{\mathbf{Z}}{8} + \frac{j}{2}\right) + \frac{-j}{2}(\mathbf{Z}+j8)$$

$$-4 - j26 = \mathbf{Z}\left(\frac{3}{2} - j\frac{1}{2}\right)$$

$$\mathbf{Z} = \frac{-4 - j26}{\frac{3}{2} - j\frac{1}{2}} = \frac{26.31\angle 261.25^\circ}{1.5811\angle -18.43^\circ} = 16.64\angle 279.68^\circ$$

Z = **<u>2.798 – j16.403 Ω</u>**

Chapter 9, Solution 56.

$$3\text{H} \longrightarrow j\omega L = j30$$

$$3\text{F} \longrightarrow \frac{1}{j\omega C} = -j/30$$

$$1.5\text{F} \longrightarrow \frac{1}{j\omega C} = -j/15$$

$$j30//(-j/15) = \frac{j30x\frac{-j}{15}}{j30 - \frac{j}{15}} = -j0.06681$$

$$Z = \frac{-j}{30}//(2 - j0.06681) = \frac{-j0.033(2 - j0.06681)}{-j0.033 + 2 - j0.06681} = \underline{6 - j333\,\text{m}\Omega}$$

Chapter 9, Solution 57.

$$2\text{H} \longrightarrow j\omega L = j2$$

$$1\text{F} \longrightarrow \frac{1}{j\omega C} = -j$$

$$Z = 1 + j2//(2 - j) = 1 + \frac{j2(2 - j)}{j2 + 2 - j} = 2.6 + j1.2$$

$$Y = 1/Z = \underline{0.3171 - j0.1463\ \text{S}}$$

Chapter 9, Solution 58.

(a) 10 mF $\longrightarrow$ $\dfrac{1}{j\omega C} = \dfrac{1}{j(50)(10\times 10^{-3})} = \text{-}j2$

10 mH $\longrightarrow$ $j\omega L = j(50)(10\times 10^{-3}) = j0.5$

$\mathbf{Z}_{in} = j0.5 + 1 \,||\, (1 - j2)$

$\mathbf{Z}_{in} = j0.5 + \dfrac{1 - j2}{2 - j2}$

$\mathbf{Z}_{in} = j0.5 + 0.25(3 - j)$

$\mathbf{Z}_{in} =$ **0.75 + j0.25 Ω**

(b) 0.4 H $\longrightarrow$ $j\omega L = j(50)(0.4) = j20$

0.2 H $\longrightarrow$ $j\omega L = j(50)(0.2) = j10$

1 mF $\longrightarrow$ $\dfrac{1}{j\omega C} = \dfrac{1}{j(50)(1\times 10^{-3})} = \text{-}j20$

For the parallel elements,

$$\frac{1}{\mathbf{Z}_p} = \frac{1}{20} + \frac{1}{j10} + \frac{1}{\text{-}j20}$$

$$\mathbf{Z}_p = 10 + j10$$

Then,

$\mathbf{Z}_{in} = 10 + j20 + \mathbf{Z}_p =$ **20 + j30 Ω**

Chapter 9, Solution 59.

$$\mathbf{Z}_{eq} = 6 + (1 - j2) \,||\, (2 + j4)$$

$$\mathbf{Z}_{eq} = 6 + \frac{(1 - j2)(2 + j4)}{(1 - j2) + (2 + j4)}$$

$$\mathbf{Z}_{eq} = 6 + 2.308 - j1.5385$$

$\mathbf{Z}_{eq} =$ **8.308 – j1.5385 Ω**

Chapter 9, Solution 60.

$$Z = (25 + j15) + (20 - j50)//(30 + j10) = 25 + j15 + 26.097 - j5.122 = \underline{51.1 + j9.878\Omega}$$

Chapter 9, Solution 61.

All of the impedances are in parallel.

$$\frac{1}{\mathbf{Z}_{eq}} = \frac{1}{1-j} + \frac{1}{1+j2} + \frac{1}{j5} + \frac{1}{1+j3}$$

$$\frac{1}{\mathbf{Z}_{eq}} = (0.5 + j0.5) + (0.2 - j0.4) + (-j0.2) + (0.1 - j0.3) = 0.8 - j0.4$$

$$\mathbf{Z}_{eq} = \frac{1}{0.8 - j0.4} = \underline{\mathbf{1 + j0.5\ \Omega}}$$

Chapter 9, Solution 62.

$$2\text{ mH} \longrightarrow j\omega L = j(10\times10^{3})(2\times10^{-3}) = j20$$

$$1\ \mu\text{F} \longrightarrow \frac{1}{j\omega C} = \frac{1}{j(10\times10^{3})(1\times10^{-6})} = -j100$$

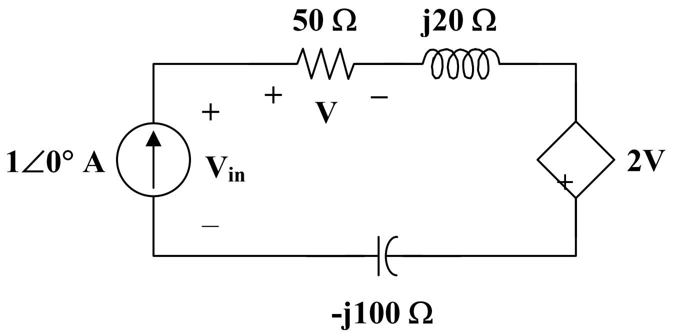

$$\mathbf{V} = (1\angle 0°)(50) = 50$$

$$\mathbf{V}_{in} = (1\angle 0°)(50 + j20 - j100) + (2)(50)$$
$$\mathbf{V}_{in} = 50 - j80 + 100 = 150 - j80$$

$$\mathbf{Z}_{in} = \frac{\mathbf{V}_{in}}{1\angle 0°} = \underline{\mathbf{150 - j80\ \Omega}}$$

Chapter 9, Solution 63.

First, replace the wye composed of the 20-ohm, 10-ohm, and j15-ohm impedances with the corresponding delta.

$$z_1 = \frac{200 + j150 + j300}{10} = 20 + j45$$

$$z_2 = \frac{200 + j450}{j15} = 30 - j13.333, \; z_3 = \frac{200 + j450}{20} = 10 + j22.5$$

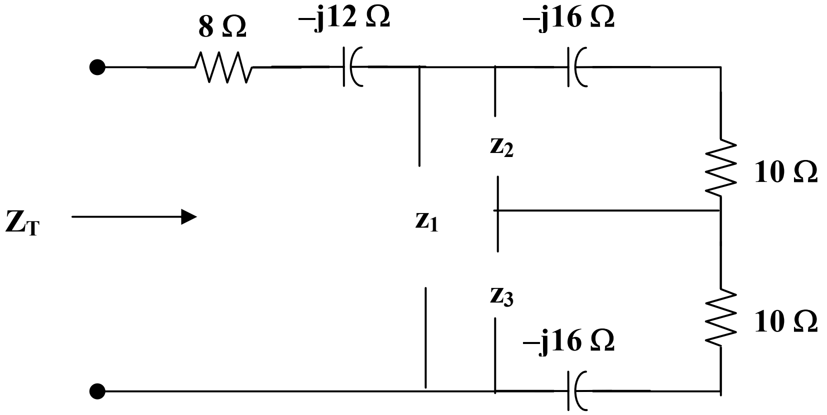

Now all we need to do is to combine impedances.

$$z_2 \| (10 - j16) = \frac{(30 - j13.333)(10 - j16)}{40 - j29.33} = 8.721 - j8.938$$

$$z_3 \| (10 - j16) = 21.70 - j3.821$$

$$Z_T = 8 - j12 + z_1 \| (8.721 - j8.938 + 21.7 - j3.821) = \underline{34.69 - j6.93\Omega}$$

Chapter 9, Solution 64.

$$Z_T = 4 + \frac{-j10(6 + j8)}{6 - j2} = \underline{19 - j5\Omega}$$

$$I = \frac{30\angle 90^\circ}{Z_T} = -0.3866 + j1.4767 = \underline{1.527\angle 104.7^\circ\,A}$$

Chapter 9, Solution 65.

$$\mathbf{Z}_T = 2 + (4 - j6) \parallel (3 + j4)$$

$$\mathbf{Z}_T = 2 + \frac{(4 - j6)(3 + j4)}{7 - j2}$$

$$\mathbf{Z}_T = \underline{\mathbf{6.83 + j1.094\ \Omega}} = 6.917\angle 9.1°\ \Omega$$

$$\mathbf{I} = \frac{\mathbf{V}}{\mathbf{Z}_T} = \frac{120\angle 10°}{6.917\angle 9.1°} = \underline{\mathbf{17.35\angle 0.9°\ A}}$$

Chapter 9, Solution 66.

$$\mathbf{Z}_T = (20 - j5) \parallel (40 + j10) = \frac{(20 - j5)(40 + j10)}{60 + j5} = \frac{170}{145}(12 - j)$$

$$\mathbf{Z}_T = \underline{\mathbf{14.069 - j1.172\ \Omega}} = 14.118\angle\text{-}4.76°$$

$$\mathbf{I} = \frac{\mathbf{V}}{\mathbf{Z}_T} = \frac{60\angle 90°}{14.118\angle\text{-}4.76°} = 4.25\angle 94.76°$$

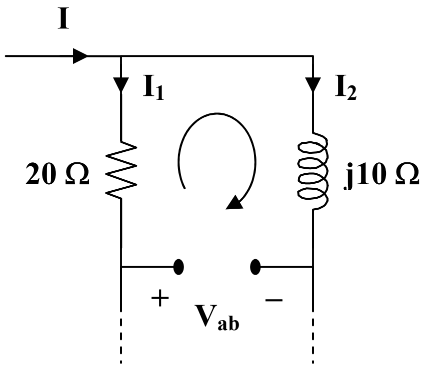

$$\mathbf{I}_1 = \frac{40 + j10}{60 + j5}\mathbf{I} = \frac{8 + j2}{12 + j}\mathbf{I}$$

$$\mathbf{I}_2 = \frac{20 - j5}{60 + j5}\mathbf{I} = \frac{4 - j}{12 + j}\mathbf{I}$$

$$\mathbf{V}_{ab} = \text{-}20\mathbf{I}_1 + j10\mathbf{I}_2$$

$$\mathbf{V}_{ab} = \frac{-(160 + j40)}{12 + j}\mathbf{I} + \frac{10 + j40}{12 + j}\mathbf{I}$$

$$\mathbf{V}_{ab} = \frac{-150}{12 + j}\mathbf{I} = \frac{(-12 + j)(150)}{145}\mathbf{I}$$

$$\mathbf{V}_{ab} = (12.457\angle 175.24°)(4.25\angle 97.76°)$$

$$\mathbf{V}_{ab} = \underline{\mathbf{52.94\angle 273°\ V}}$$

Chapter 9, Solution 67.

(a) $20\text{ mH} \longrightarrow j\omega L = j(10^3)(20 \times 10^{-3}) = j20$

$12.5\ \mu\text{F} \longrightarrow \dfrac{1}{j\omega C} = \dfrac{1}{j(10^3)(12.5 \times 10^{-6})} = -j80$

$$\mathbf{Z}_{in} = 60 + j20 \,||\, (60 - j80)$$
$$\mathbf{Z}_{in} = 60 + \frac{(j20)(60 - j80)}{60 - j60}$$
$$\mathbf{Z}_{in} = 63.33 + j23.33 = 67.494\angle 20.22°$$

$$\mathbf{Y}_{in} = \frac{1}{\mathbf{Z}_{in}} = \underline{\mathbf{0.0148\angle -20.22°\ S}}$$

(b) $10\text{ mH} \longrightarrow j\omega L = j(10^3)(10 \times 10^{-3}) = j10$

$20\ \mu\text{F} \longrightarrow \dfrac{1}{j\omega C} = \dfrac{1}{j(10^3)(20 \times 10^{-6})} = -j50$

$30 \,||\, 60 = 20$

$$\mathbf{Z}_{in} = -j50 + 20 \,||\, (40 + j10)$$
$$\mathbf{Z}_{in} = -j50 + \frac{(20)(40 + j10)}{60 + j10}$$
$$\mathbf{Z}_{in} = 13.5 - j48.92 = 50.75\angle -74.56°$$

$$\mathbf{Y}_{in} = \frac{1}{\mathbf{Z}_{in}} = \underline{\mathbf{0.0197\angle 74.56°\ S}} = 5.24 + j18.99\text{ mS}$$

Chapter 9, Solution 68.

$$\mathbf{Y}_{eq} = \frac{1}{5-j2} + \frac{1}{3+j} + \frac{1}{-j4}$$

$$\mathbf{Y}_{eq} = (0.1724 + j0.069) + (0.3 - j0.1) + (j0.25)$$

$$\mathbf{Y}_{eq} = \underline{\mathbf{0.4724 + j0.219\ S}}$$

Chapter 9, Solution 69.

$$\frac{1}{\mathbf{Y}_o} = \frac{1}{4} + \frac{1}{-j2} = \frac{1}{4}(1 + j2)$$

$$\mathbf{Y}_o = \frac{4}{1+j2} = \frac{(4)(1-j2)}{5} = 0.8 - j1.6$$

$$\mathbf{Y}_o + j = 0.8 - j0.6$$

$$\frac{1}{\mathbf{Y}_o'} = \frac{1}{1} + \frac{1}{-j3} + \frac{1}{0.8 - j0.6} = (1) + (j0.333) + (0.8 + j0.6)$$

$$\frac{1}{\mathbf{Y}_o'} = 1.8 + j0.933 = 2.028\angle 27.41°$$

$$\mathbf{Y}_o' = 0.4932\angle -27.41° = 0.4378 - j0.2271$$

$$\mathbf{Y}_o' + j5 = 0.4378 + j4.773$$

$$\frac{1}{\mathbf{Y}_{eq}} = \frac{1}{2} + \frac{1}{0.4378 + j4.773} = 0.5 + \frac{0.4378 - j4.773}{22.97}$$

$$\frac{1}{\mathbf{Y}_{eq}} = 0.5191 - j0.2078$$

$$\mathbf{Y}_{eq} = \frac{0.5191 - j0.2078}{0.3126} = \underline{\mathbf{1.661 + j0.6647\ S}}$$

Chapter 9, Solution 70.

Make a delta-to-wye transformation as shown in the figure below.

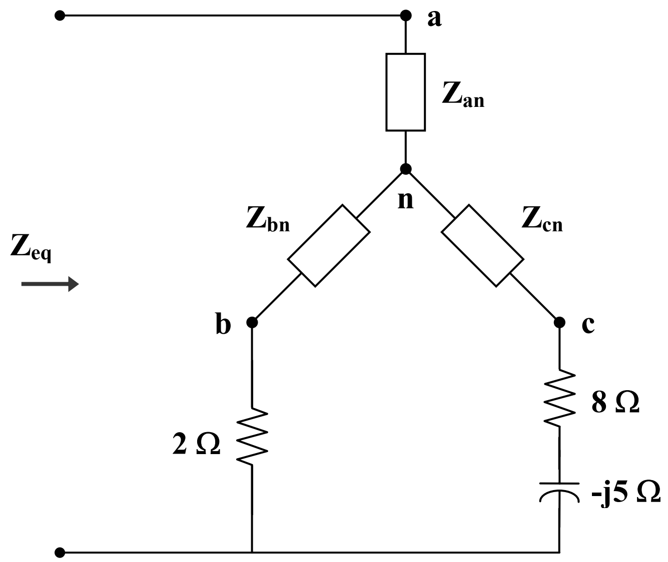

$$\mathbf{Z}_{an} = \frac{(\text{-j}10)(10 + \text{j}15)}{5 - \text{j}10 + 10 + \text{j}15} = \frac{(10)(15 - \text{j}10)}{15 + \text{j}5} = 7 - \text{j}9$$

$$\mathbf{Z}_{bn} = \frac{(5)(10 + \text{j}15)}{15 + \text{j}5} = 4.5 + \text{j}3.5$$

$$\mathbf{Z}_{cn} = \frac{(5)(\text{-j}10)}{15 + \text{j}5} = \text{-}1 - \text{j}3$$

$$\mathbf{Z}_{eq} = \mathbf{Z}_{an} + (\mathbf{Z}_{bn} + 2) \,||\, (\mathbf{Z}_{cn} + 8 - \text{j}5)$$

$$\mathbf{Z}_{eq} = 7 - \text{j}9 + (6.5 + \text{j}3.5) \,||\, (7 - \text{j}8)$$

$$\mathbf{Z}_{eq} = 7 - \text{j}9 + \frac{(6.5 + \text{j}3.5)(7 - \text{j}8)}{13.5 - \text{j}4.5}$$

$$\mathbf{Z}_{eq} = 7 - \text{j}9 + 5.511 - \text{j}0.2$$

$$\mathbf{Z}_{eq} = 12.51 - \text{j}9.2 = \underline{\mathbf{15.53\angle\text{-}36.33^\circ\ \Omega}}$$

Chapter 9, Solution 71.

We apply a wye-to-delta transformation.

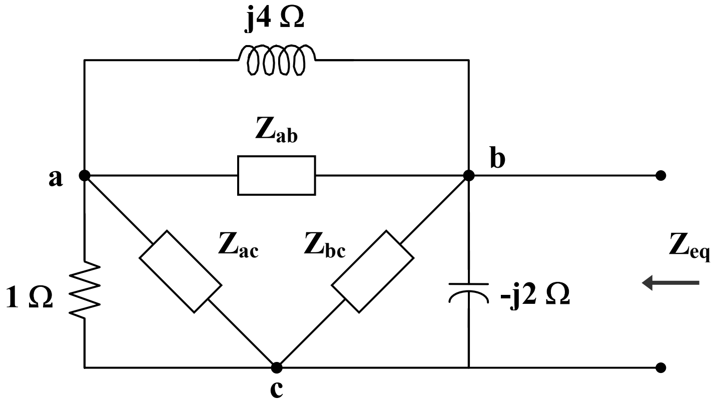

$$\mathbf{Z}_{ab} = \frac{2 - j2 + j4}{j2} = \frac{2 + j2}{j2} = 1 - j$$

$$\mathbf{Z}_{ac} = \frac{2 + j2}{2} = 1 + j$$

$$\mathbf{Z}_{bc} = \frac{2 + j2}{-j} = -2 + j2$$

$$j4 \,||\, \mathbf{Z}_{ab} = j4 \,||\, (1 - j) = \frac{(j4)(1 - j)}{1 + j3} = 1.6 - j0.8$$

$$1 \,||\, \mathbf{Z}_{ac} = 1 \,||\, (1 + j) = \frac{(1)(1 + j)}{2 + j} = 0.6 + j0.2$$

$$j4 \,||\, \mathbf{Z}_{ab} + 1 \,||\, \mathbf{Z}_{ac} = 2.2 - j0.6$$

$$\frac{1}{\mathbf{Z}_{eq}} = \frac{1}{-j2} + \frac{1}{-2 + j2} + \frac{1}{2.2 - j0.6}$$

$$= j0.5 - 0.25 - j0.25 + 0.4231 + j0.1154$$

$$= 0.173 + j0.3654 = 0.4043\angle 64.66^\circ$$

$\mathbf{Z}_{eq} = 2.473\angle\text{-}64.66^\circ\ \Omega$ = **<u>1.058 – j2.235 Ω</u>**

Chapter 9, Solution 72.

Transform the delta connections to wye connections as shown below.

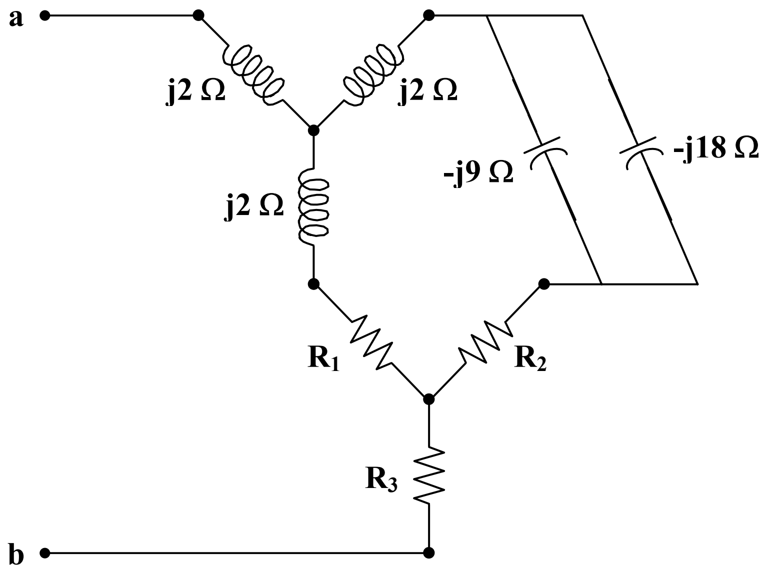

$- j9 \,||\, -j18 = -j6,$

$$R_1 = \frac{(20)(20)}{20+20+10} = 8\,\Omega, \qquad R_2 = \frac{(20)(10)}{50} = 4\,\Omega, \qquad R_3 = \frac{(20)(10)}{50} = 4\,\Omega$$

$$\mathbf{Z}_{ab} = j2 + (j2+8) \,||\, (j2 - j6 + 4) + 4$$

$$\mathbf{Z}_{ab} = 4 + j2 + (8 + j2) \,||\, (4 - j4)$$

$$\mathbf{Z}_{ab} = 4 + j2 + \frac{(8+j2)(4-j4)}{12 - j2}$$

$$\mathbf{Z}_{ab} = 4 + j2 + 3.567 - j1.4054$$

$$\mathbf{Z}_{ab} = \underline{\mathbf{7.567 + j0.5946\,\Omega}}$$

Chapter 9, Solution 73.

Transform the delta connection to a wye connection as in Fig. (a) and then transform the wye connection to a delta connection as in Fig. (b).

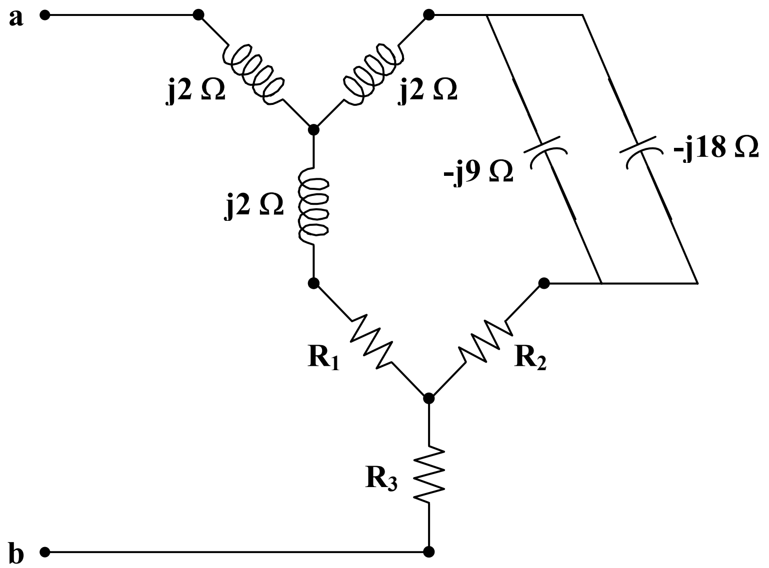

$$\mathbf{Z}_1 = \frac{(j8)(-j6)}{j8 + j8 - j6} = \frac{48}{j10} = -j4.8$$

$$\mathbf{Z}_2 = \mathbf{Z}_1 = -j4.8$$

$$\mathbf{Z}_3 = \frac{(j8)(j8)}{j10} = \frac{-64}{j10} = j6.4$$

$$(2 + \mathbf{Z}_1)(4 + \mathbf{Z}_2) + (4 + \mathbf{Z}_2)(\mathbf{Z}_3) + (2 + \mathbf{Z}_1)(\mathbf{Z}_3) =$$
$$(2 - j4.8)(4 - j4.8) + (4 - j4.8)(j6.4) + (2 - j4.8)(j6.4) = 46.4 + j9.6$$

$$\mathbf{Z}_a = \frac{46.4 + j9.6}{j6.4} = 1.5 - j7.25$$

$$\mathbf{Z}_b = \frac{46.4 + j9.6}{4 - j4.8} = 3.574 + j6.688$$

$$\mathbf{Z}_c = \frac{46.4 + j9.6}{2 - j4.8} = 1.727 + j8.945$$

$$j6 \parallel \mathbf{Z}_b = \frac{(6\angle 90°)(7.583\angle 61.88°)}{3.574 + j12.688} = 07407 + j3.3716$$

$$-j4 \parallel \mathbf{Z}_a = \frac{(-j4)(1.5 - j7.25)}{1.5 - j11.25} = 0.186 - j2.602$$

$$j12 \,||\, \mathbf{Z}_c = \frac{(12\angle 90°)(9.11\angle 79.07°)}{1.727 + j20.945} = 0.5634 + j5.1693$$

$$\mathbf{Z}_{eq} = (j6 \,||\, \mathbf{Z}_b) \,||\, (\text{-}j4 \,||\, \mathbf{Z}_a + j12 \,||\, \mathbf{Z}_c)$$
$$\mathbf{Z}_{eq} = (0.7407 + j3.3716) \,||\, (0.7494 + j2.5673)$$
$$\mathbf{Z}_{eq} = 1.508\angle 75.42°\ \Omega = \underline{\mathbf{0.3796 + j1.46\ \Omega}}$$

Chapter 9, Solution 74.

One such RL circuit is shown below.

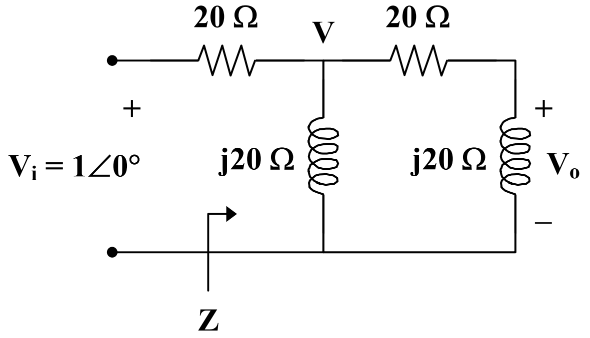

We now want to show that this circuit will produce a 90° phase shift.

$$\mathbf{Z} = j20 \,||\, (20 + j20) = \frac{(j20)(20 + j20)}{20 + j40} = \frac{-20 + j20}{1 + j2} = 4(1 + j3)$$

$$\mathbf{V} = \frac{\mathbf{Z}}{\mathbf{Z} + 20}\mathbf{V}_i = \frac{4 + j12}{24 + j12}(1\angle 0°) = \frac{1 + j3}{6 + j3} = \frac{1}{3}(1 + j)$$

$$\mathbf{V}_o = \frac{j20}{20 + j20}\mathbf{V} = \left(\frac{j}{1 + j}\right)\left(\frac{1}{3}(1 + j)\right) = \frac{j}{3} = 0.3333\angle 90°$$

This shows that the output leads the input by 90°.

Chapter 9, Solution 75.

Since $\cos(\omega t) = \sin(\omega t + 90°)$, we need a phase shift circuit that will cause the output to lead the input by 90°. **This is achieved by the RL circuit shown below, as explained in the previous problem**.

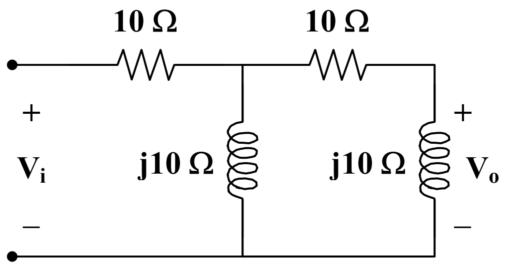

This can also be obtained by an RC circuit.

Chapter 9, Solution 76.

Let $Z = R - jX$, where $X = \dfrac{1}{\omega C} = \dfrac{1}{2\pi f C}$

$$|Z| = \sqrt{R^2 + X^2} \quad \longrightarrow \quad X = \sqrt{|Z|^2 - R^2} = \sqrt{116^2 = 66^2} = 95.394$$

$$C = \frac{1}{2\pi f X} = \frac{1}{2\pi x 60 x 95.394} = \underline{27.81\mu F}$$

Chapter 9, Solution 77.

(a) $$\mathbf{V}_o = \frac{-jX_c}{R - jX_c}\mathbf{V}_i$$

where $$X_c = \frac{1}{\omega C} = \frac{1}{(2\pi)(2\times 10^6)(20\times 10^{-9})} = 3.979$$

$$\frac{\mathbf{V}_o}{\mathbf{V}_i} = \frac{-j3.979}{5 - j3.979} = \frac{3.979}{\sqrt{5^2 + 3.979^2}}\angle(-90^\circ + \tan^{-1}(3.979/5))$$

$$\frac{\mathbf{V}_o}{\mathbf{V}_i} = \frac{3.979}{\sqrt{25 + 15.83}}\angle(-90^\circ - 38.51^\circ)$$

$$\frac{\mathbf{V}_o}{\mathbf{V}_i} = 0.6227\angle -51.49^\circ$$

Therefore, the phase shift is **51.49° lagging**

(b) $\theta = -45° = -90° + \tan^{-1}(X_c/R)$

$$45° = \tan^{-1}(X_c/R) \longrightarrow R = X_c = \frac{1}{\omega C}$$

$$\omega = 2\pi f = \frac{1}{RC}$$

$$f = \frac{1}{2\pi RC} = \frac{1}{(2\pi)(5)(20\times 10^{-9})} = \underline{\mathbf{1.5915\ MHz}}$$

Chapter 9, Solution 78.

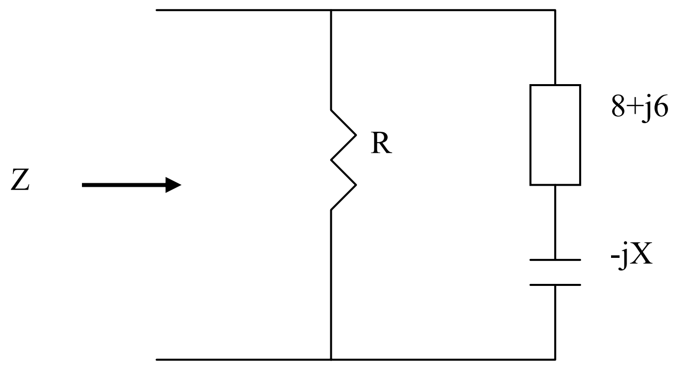

$$Z = R // [8 + j(6-X)] = \frac{R[8 + j(6-X)]}{R + 8 + j(6-X)} = 5$$

i.e $8R + j6R - jXR = 5R + 40 + j30 - j5X$

Equating real and imaginary parts:

8R = 5R + 40 which leads to **R=<u>13.33Ω</u>**
6R-XR =30-5 which leads to **X=<u>4.125Ω</u>.**

Chapter 9, Solution 79.

(a) Consider the circuit as shown.

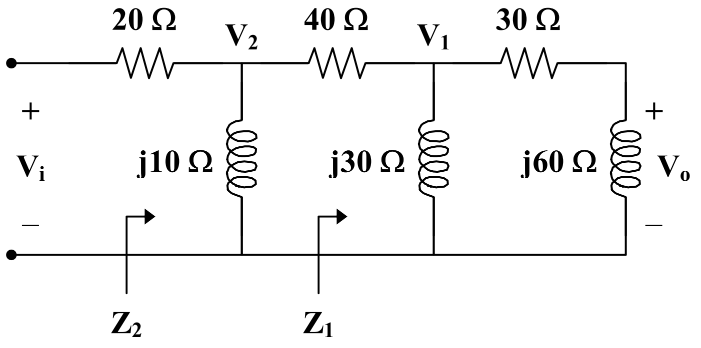

$$\mathbf{Z}_1 = j30 \,||\, (30 + j60) = \frac{(j30)(30 + j60)}{30 + j90} = 3 + j21$$

$$\mathbf{Z}_2 = j10 \,||\, (40 + \mathbf{Z}_1) = \frac{(j10)(43 + j21)}{43 + j31} = 1.535 + j8.896 = 9.028\angle 80.21°$$

Let $\mathbf{V}_i = 1\angle 0°$.

$$\mathbf{V}_2 = \frac{\mathbf{Z}_2}{\mathbf{Z}_2 + 20}\mathbf{V}_i = \frac{(9.028\angle 80.21°)(1\angle 0°)}{21.535 + j8.896}$$

$$\mathbf{V}_2 = 0.3875\angle 57.77°$$

$$\mathbf{V}_1 = \frac{\mathbf{Z}_1}{\mathbf{Z}_1 + 40}\mathbf{V}_2 = \frac{3 + j21}{43 + j21}\mathbf{V}_2 = \frac{(21.213\angle 81.87°)(0.3875\angle 57.77°)}{47.85\angle 26.03°}$$

$$\mathbf{V}_1 = 0.1718\angle 113.61°$$

$$\mathbf{V}_o = \frac{j60}{30 + j60}\mathbf{V}_1 = \frac{j2}{1 + j2}\mathbf{V}_1 = \frac{2}{5}(2 + j)\mathbf{V}_1$$

$$\mathbf{V}_o = (0.8944\angle 26.56°)(0.1718\angle 113.6°)$$

$$\mathbf{V}_o = 0.1536\angle 140.2°$$

Therefore, the phase shift is **140.2°**

(b) The phase shift is **leading**.

(c) If $\mathbf{V}_i = 120$ V, then

$$\mathbf{V}_o = (120)(0.1536\angle 140.2°) = 18.43\angle 140.2°\text{ V}$$

and the magnitude is **18.43 V**.

Chapter 9, Solution 80.

$$200\text{ mH} \longrightarrow j\omega L = j(2\pi)(60)(200 \times 10^{-3}) = j75.4\,\Omega$$

$$\mathbf{V}_o = \frac{j75.4}{R + 50 + j75.4}\mathbf{V}_i = \frac{j75.4}{R + 50 + j75.4}(120\angle 0°)$$

(a) When $R = 100\,\Omega$,

$$\mathbf{V}_o = \frac{j75.4}{150 + j75.4}(120\angle 0°) = \frac{(75.4\angle 90°)(120\angle 0°)}{167.88\angle 26.69°}$$

$$\mathbf{V}_o = \mathbf{53.89\angle 63.31°\ V}$$

(b) When $R = 0\,\Omega$,

$$\mathbf{V}_o = \frac{j75.4}{50 + j75.4}(120\angle 0°) = \frac{(75.4\angle 90°)(120\angle 0°)}{90.47\angle 56.45°}$$

$$\mathbf{V}_o = \underline{\mathbf{100\angle 33.55°\ V}}$$

(c) To produce a phase shift of 45°, the phase of $\mathbf{V}_o = 90° + 0° - \alpha = 45°$.
Hence, α = phase of $(R + 50 + j75.4) = 45°$.
For α to be 45°, $R + 50 = 75.4$
Therefore, $R = \underline{\mathbf{25.4\ \Omega}}$

Chapter 9, Solution 81.

Let $\mathbf{Z}_1 = R_1$, $\mathbf{Z}_2 = R_2 + \frac{1}{j\omega C_2}$, $\mathbf{Z}_3 = R_3$, and $\mathbf{Z}_x = R_x + \frac{1}{j\omega C_x}$.

$$\mathbf{Z}_x = \frac{\mathbf{Z}_3}{\mathbf{Z}_1}\mathbf{Z}_2$$

$$R_x + \frac{1}{j\omega C_x} = \frac{R_3}{R_1}\left(R_2 + \frac{1}{j\omega C_2}\right)$$

$$R_x = \frac{R_3}{R_1}R_2 = \frac{1200}{400}(600) = \underline{\mathbf{1.8\ k\Omega}}$$

$$\frac{1}{C_x} = \left(\frac{R_3}{R_1}\right)\left(\frac{1}{C_2}\right) \longrightarrow C_x = \frac{R_1}{R_3}C_2 = \left(\frac{400}{1200}\right)(0.3\times 10^{-6}) = \underline{\mathbf{0.1\ \mu F}}$$

Chapter 9, Solution 82.

$$C_x = \frac{R_1}{R_2}C_s = \left(\frac{100}{2000}\right)(40\times 10^{-6}) = \underline{\mathbf{2\ \mu F}}$$

Chapter 9, Solution 83.

$$L_x = \frac{R_2}{R_1}L_s = \left(\frac{500}{1200}\right)(250\times 10^{-3}) = \underline{\mathbf{104.17\ mH}}$$

Chapter 9, Solution 84.

Let $\mathbf{Z}_1 = R_1 \parallel \dfrac{1}{j\omega C_s}$, $\mathbf{Z}_2 = R_2$, $\mathbf{Z}_3 = R_3$, and $\mathbf{Z}_x = R_x + j\omega L_x$.

$$\mathbf{Z}_1 = \frac{\dfrac{R_1}{j\omega C_s}}{R_1 + \dfrac{1}{j\omega C_s}} = \frac{R_1}{j\omega R_1 C_s + 1}$$

Since $\mathbf{Z}_x = \dfrac{\mathbf{Z}_3}{\mathbf{Z}_1}\mathbf{Z}_2$,

$$R_x + j\omega L_x = R_2 R_3 \frac{j\omega R_1 C_s + 1}{R_1} = \frac{R_2 R_3}{R_1}(1 + j\omega R_1 C_s)$$

Equating the real and imaginary components,

$$\underline{\mathbf{R_x = \frac{R_2 R_3}{R_1}}}$$

$\omega L_x = \dfrac{R_2 R_3}{R_1}(\omega R_1 C_s)$ implies that

$$\underline{\mathbf{L_x = R_2 R_3 C_s}}$$

Given that $R_1 = 40\ k\Omega$, $R_2 = 1.6\ k\Omega$, $R_3 = 4\ k\Omega$, and $C_s = 0.45\ \mu F$

$$R_x = \frac{R_2 R_3}{R_1} = \frac{(1.6)(4)}{40}\ k\Omega = 0.16\ k\Omega = \underline{\mathbf{160\ \Omega}}$$

$$L_x = R_2 R_3 C_s = (1.6)(4)(0.45) = \underline{\mathbf{2.88\ H}}$$

Chapter 9, Solution 85.

Let $\mathbf{Z}_1 = R_1$, $\mathbf{Z}_2 = R_2 + \dfrac{1}{j\omega C_2}$, $\mathbf{Z}_3 = R_3$, and $\mathbf{Z}_4 = R_4 \parallel \dfrac{1}{j\omega C_4}$.

$$\mathbf{Z}_4 = \frac{R_4}{j\omega R_4 C_4 + 1} = \frac{-jR_4}{\omega R_4 C_4 - j}$$

Since $\mathbf{Z}_4 = \dfrac{\mathbf{Z}_3}{\mathbf{Z}_1}\mathbf{Z}_2 \longrightarrow \mathbf{Z}_1\mathbf{Z}_4 = \mathbf{Z}_2\mathbf{Z}_3$,

$$\frac{-jR_4R_1}{\omega R_4C_4 - j} = R_3\left(R_2 - \frac{j}{\omega C_2}\right)$$

$$\frac{-jR_4R_1(\omega R_4C_4 + j)}{\omega^2 R_4^2 C_4^2 + 1} = R_3R_2 - \frac{jR_3}{\omega C_2}$$

Equating the real and imaginary components,

$$\frac{R_1R_4}{\omega^2 R_4^2 C_4^2 + 1} = R_2R_3 \qquad (1)$$

$$\frac{\omega R_1 R_4^2 C_4}{\omega^2 R_4^2 C_4^2 + 1} = \frac{R_3}{\omega C_2} \qquad (2)$$

Dividing (1) by (2),

$$\frac{1}{\omega R_4 C_4} = \omega R_2 C_2$$

$$\omega^2 = \frac{1}{R_2C_2R_4C_4}$$

$$\omega = 2\pi f = \frac{1}{\sqrt{R_2C_2R_4C_4}}$$

$$\underline{\mathbf{f} = \frac{\mathbf{1}}{\mathbf{2\pi\sqrt{R_2R_4C_2C_4}}}}$$

Chapter 9, Solution 86.

$$\mathbf{Y} = \frac{1}{240} + \frac{1}{j95} + \frac{1}{-j84}$$

$$\mathbf{Y} = 4.1667 \times 10^{-3} - j0.01053 + j0.0119$$

$$\mathbf{Z} = \frac{1}{\mathbf{Y}} = \frac{1000}{4.1667 + j1.37} = \frac{1000}{4.3861\angle 18.2°}$$

$\mathbf{Z}$ = $\underline{\mathbf{228\angle\text{-}18.2°\ \Omega}}$

Chapter 9, Solution 87.

$$\mathbf{Z}_1 = 50 + \frac{1}{j\omega C} = 50 + \frac{-j}{(2\pi)(2\times10^3)(2\times10^{-6})}$$

$$\mathbf{Z}_1 = 50 - j39.79$$

$$\mathbf{Z}_2 = 80 + j\omega L = 80 + j(2\pi)(2\times10^3)(10\times10^{-3})$$

$$\mathbf{Z}_2 = 80 + j125.66$$

$$\mathbf{Z}_3 = 100$$

$$\frac{1}{\mathbf{Z}} = \frac{1}{\mathbf{Z}_1} + \frac{1}{\mathbf{Z}_2} + \frac{1}{\mathbf{Z}_3}$$

$$\frac{1}{\mathbf{Z}} = \frac{1}{100} + \frac{1}{50 - j39.79} + \frac{1}{80 + j125.66}$$

$$\frac{1}{\mathbf{Z}} = 10^{-3}(10 + 12.24 + j9.745 + 3.605 - j5.663)$$

$$= (25.85 + j4.082)\times10^{-3}$$

$$= 26.17\times10^{-3}\angle 8.97°$$

$\mathbf{Z}$ = $\underline{\mathbf{38.21\angle{-8.97°}\ \Omega}}$

Chapter 9, Solution 88.

(a) $\mathbf{Z} = -j20 + j30 + 120 - j20$

$\mathbf{Z}$ = $\underline{\mathbf{120 - j10\ \Omega}}$

(b) If the frequency were halved, $\frac{1}{\omega C} = \frac{1}{2\pi f C}$ would cause the capacitive impedance to double, while $\omega L = 2\pi f L$ would cause the inductive impedance to halve. Thus,

$\mathbf{Z} = -j40 + j15 + 120 - j40$

$\mathbf{Z}$ = $\underline{\mathbf{120 - j65\ \Omega}}$

Chapter 9, Solution 89.

$$\mathbf{Z}_{in} = j\omega L \,||\, \left(R + \frac{1}{j\omega C} \right)$$

$$\mathbf{Z}_{in} = \frac{j\omega L\left(R + \dfrac{1}{j\omega C} \right)}{R + j\omega L + \dfrac{1}{j\omega C}} = \frac{\dfrac{L}{C} + j\omega L\, R}{R + j\left(\omega L - \dfrac{1}{\omega C} \right)}$$

$$\mathbf{Z}_{in} = \frac{\left(\dfrac{L}{C} + j\omega L\, R \right)\left(R - j\left(\omega L - \dfrac{1}{\omega C} \right) \right)}{R^2 + \left(\omega L - \dfrac{1}{\omega C} \right)^2}$$

To have a resistive impedance, $\text{Im}(\mathbf{Z}_{in}) = 0$. Hence,

$$\omega L\, R^2 - \left(\frac{L}{C} \right)\left(\omega L - \frac{1}{\omega C} \right) = 0$$

$$\omega R^2 C = \omega L - \frac{1}{\omega C}$$

$$\omega^2 R^2 C^2 = \omega^2 LC - 1$$

$$L = \frac{\omega^2 R^2 C^2 + 1}{\omega^2 C} \qquad (1)$$

Ignoring the +1 in the numerator in (1),

$$L = R^2 C = (200)^2 (50 \times 10^{-9}) = \underline{\mathbf{2\ mH}}$$

Chapter 9, Solution 90.

Let $\mathbf{V}_s = 145\angle 0°$, $\quad X = j\omega L = j(2\pi)(60)\,L = j377\,L$

$$\mathbf{I} = \frac{\mathbf{V}_s}{80 + R + jX} = \frac{145\angle 0°}{80 + R + jX}$$

$$\mathbf{V}_1 = 80\,\mathbf{I} = \frac{(80)(145)}{80 + R + jX}$$

$$50 = \left| \frac{(80)(145)}{80 + R + jX} \right| \qquad (1)$$

$$\mathbf{V}_o = (R + jX)\,\mathbf{I} = \frac{(R + jX)(145\angle 0°)}{80 + R + jX}$$

$$110 = \left| \frac{(R + jX)(145)}{80 + R + jX} \right| \qquad (2)$$

From (1) and (2),

$$\frac{50}{110} = \frac{80}{\left| R + jX \right|}$$

$$\left| R + jX \right| = (80)\left(\frac{11}{5}\right)$$

$$R^2 + X^2 = 30976 \qquad (3)$$

From (1),

$$\left| 80 + R + jX \right| = \frac{(80)(145)}{50} = 232$$

$$6400 + 160R + R^2 + X^2 = 53824$$

$$160R + R^2 + X^2 = 47424 \qquad (4)$$

Subtracting (3) from (4),

$$160R = 16448 \longrightarrow R = \underline{\mathbf{102.8\ \Omega}}$$

From (3),

$$X^2 = 30976 - 10568 = 20408$$

$$X = 142.86 = 377L \longrightarrow L = \underline{\mathbf{0.3789\ H}}$$

Chapter 9, Solution 91.

$$\mathbf{Z}_{in} = \frac{1}{j\omega C} + R \parallel j\omega L$$

$$\mathbf{Z}_{in} = \frac{-j}{\omega C} + \frac{j\omega LR}{R + j\omega L}$$

$$= \frac{-j}{\omega C} + \frac{\omega^2 L^2 R + j\omega LR^2}{R^2 + \omega^2 L^2}$$

To have a resistive impedance, $\text{Im}(\mathbf{Z}_{in}) = 0$.
Hence,

$$\frac{-1}{\omega C} + \frac{\omega LR^2}{R^2 + \omega^2 L^2} = 0$$

$$\frac{1}{\omega C} = \frac{\omega LR^2}{R^2 + \omega^2 L^2}$$

$$C = \frac{R^2 + \omega^2 L^2}{\omega^2 LR^2}$$

where $\omega = 2\pi f = 2\pi \times 10^7$

$$C = \frac{9 \times 10^4 + (4\pi^2 \times 10^{14})(400 \times 10^{-12})}{(4\pi^2 \times 10^{14})(20 \times 10^{-6})(9 \times 10^4)}$$

$$C = \frac{9 + 16\pi^2}{72\pi^2} \text{ nF}$$

C = **235 pF**

Chapter 9, Solution 92.

(a) $Z_o = \sqrt{\frac{Z}{Y}} = \sqrt{\frac{100\angle 75^o}{450\angle 48^o x10^{-6}}} = \underline{471.4\angle 13.5^o \Omega}$

(b) $\gamma = \sqrt{ZY} = \sqrt{100\angle 75^o x450\angle 48^o x10^{-6}} = \underline{0.2121\angle 61.5^o}$

Chapter 9, Solution 93.

$$\mathbf{Z} = \mathbf{Z}_s + 2\mathbf{Z}_\ell + \mathbf{Z}_L$$
$$\mathbf{Z} = (1 + 0.8 + 23.2) + j(0.5 + 0.6 + 18.9)$$
$$\mathbf{Z} = 25 + j20$$

$$\mathbf{I}_L = \frac{\mathbf{V}_S}{\mathbf{Z}} = \frac{115\angle 0°}{32.02\angle 38.66°}$$

$\mathbf{I}_L$ = **3.592∠-38.66° A**

Chapter 10, Solution 1.

$\omega = 1$

$10\cos(t - 45°) \longrightarrow 10\angle -45°$

$5\sin(t + 30°) \longrightarrow 5\angle -60°$

$1\text{ H} \longrightarrow j\omega L = j$

$1\text{ F} \longrightarrow \dfrac{1}{j\omega C} = -j$

The circuit becomes as shown below.

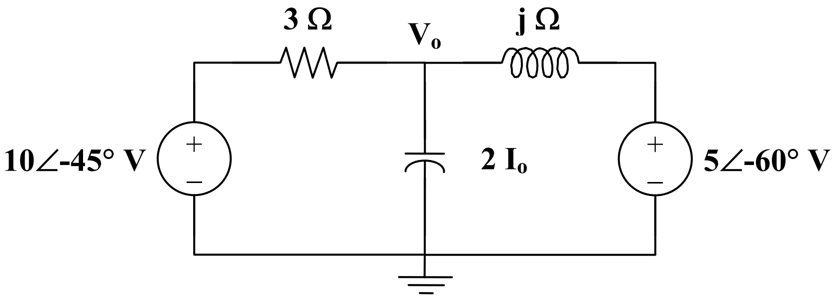

Applying nodal analysis,

$$\frac{(10\angle -45°) - \mathbf{V}_o}{3} + \frac{(5\angle -60°) - \mathbf{V}_o}{j} = \frac{\mathbf{V}_o}{-j}$$

$$j10\angle -45° + 15\angle -60° = j\mathbf{V}_o$$

$$\mathbf{V}_o = 10\angle -45° + 15\angle -150° = 15.73\angle 247.9°$$

Therefore, $v_o(t) =$ **<u>15.73 cos(t + 247.9°) V</u>**

Chapter 10, Solution 2.

$\omega = 10$

$4\cos(10t - \pi/4) \longrightarrow 4\angle -45°$

$20\sin(10t + \pi/3) \longrightarrow 20\angle -150°$

$1\text{ H} \longrightarrow j\omega L = j10$

$0.02\text{ F} \longrightarrow \dfrac{1}{j\omega C} = \dfrac{1}{j0.2} = -j5$

The circuit becomes that shown below.

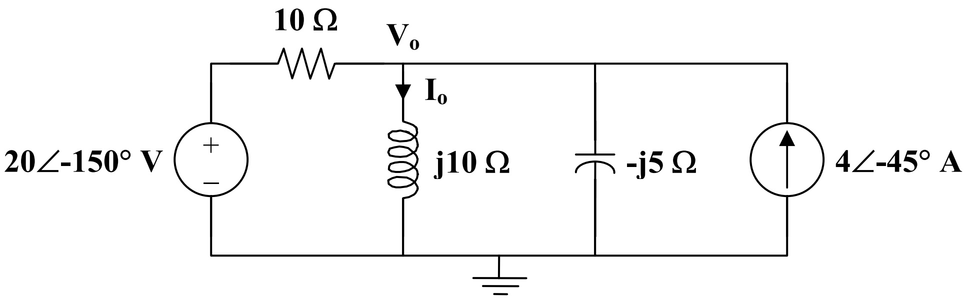

Applying nodal analysis,

$$\frac{(20\angle\text{-}150°) - \mathbf{V}_o}{10} + 4\angle\text{-}45° = \frac{\mathbf{V}_o}{j10} + \frac{\mathbf{V}_o}{\text{-}j5}$$

$$20\angle\text{-}150° + 4\angle\text{-}45° = 0.1(1+j)\mathbf{V}_o$$

$$\mathbf{I}_o = \frac{\mathbf{V}_o}{j10} = \frac{2\angle\text{-}150° + 4\angle\text{-}45°}{j(1+j)} = 2.816\angle 150.98°$$

Therefore, $i_o(t) =$ **2.816 cos(10t + 150.98°) A**

Chapter 10, Solution 3.

$$\omega = 4$$

$$2\cos(4t) \longrightarrow 2\angle 0°$$

$$16\sin(4t) \longrightarrow 16\angle\text{-}90° = \text{-}j16$$

$$2\text{ H} \longrightarrow j\omega L = j8$$

$$1/12\text{ F} \longrightarrow \frac{1}{j\omega C} = \frac{1}{j(4)(1/12)} = \text{-}j3$$

The circuit is shown below.

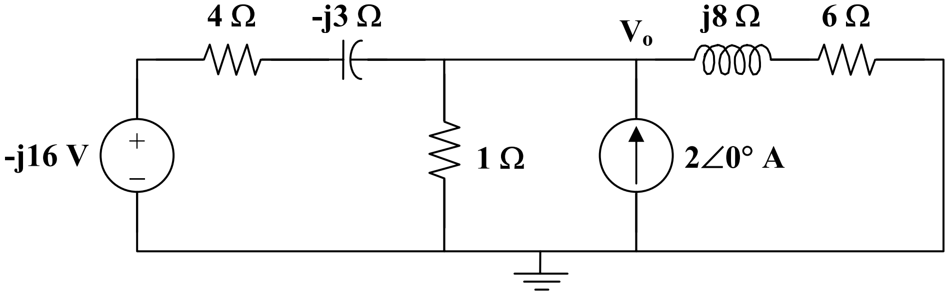

Applying nodal analysis,

$$\frac{-j16 - \mathbf{V}_o}{4 - j3} + 2 = \frac{\mathbf{V}_o}{1} + \frac{\mathbf{V}_o}{6 + j8}$$

$$\frac{-j16}{4 - j3} + 2 = \left(1 + \frac{1}{4 - j3} + \frac{1}{6 + j8}\right)\mathbf{V}_o$$

$$\mathbf{V}_o = \frac{3.92 - j2.56}{1.22 + j0.04} = \frac{4.682\angle -33.15°}{1.2207\angle 1.88°} = 3.835\angle -35.02°$$

Therefore, $v_o(t) =$ **3.835 cos(4t – 35.02°) V**

Chapter 10, Solution 4.

$$16\sin(4t - 10°) \longrightarrow 16\angle -10°, \quad \omega = 4$$
$$1\text{ H} \longrightarrow j\omega L = j4$$

$$0.25\text{ F} \longrightarrow \frac{1}{j\omega C} = \frac{1}{j(4)(1/4)} = -j$$

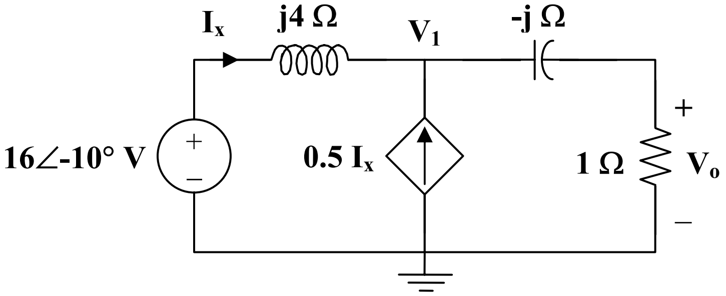

$$\frac{(16\angle -10°) - \mathbf{V}_1}{j4} + \frac{1}{2}\mathbf{I}_x = \frac{\mathbf{V}_1}{1 - j}$$

But

$$\mathbf{I}_x = \frac{(16\angle -10°) - \mathbf{V}_1}{j4}$$

So, $$\frac{3((16\angle -10°) - \mathbf{V}_1)}{j8} = \frac{\mathbf{V}_1}{1 - j}$$

$$\mathbf{V}_1 = \frac{48\angle\text{-}10°}{\text{-}1 + j4}$$

Using voltage division,

$$\mathbf{V}_o = \frac{1}{1 - j}\mathbf{V}_1 = \frac{48\angle\text{-}10°}{(1\text{-}j)(\text{-}1 + j4)} = 8.232\angle\text{-}69.04°$$

Therefore, $v_o(t) =$ $\underline{\mathbf{8.232\ sin(4t - 69.04°)\ V}}$

Chapter 10, Solution 5.

Let the voltage across the capacitor and the inductor be V_x and we get:

$$\frac{V_x - 0.5I_x - 10\angle 30°}{4} + \frac{V_x}{-j2} + \frac{V_x}{j3} = 0$$

$$(3 + j6 - j4)V_x - 1.5I_x = 30\angle 30° \text{ but } I_x = \frac{V_x}{-j2} = j0.5V_x$$

Combining these equations we get:

$$(3 + j2 - j0.75)V_x = 30\angle 30° \text{ or } V_x = \frac{30\angle 30°}{3 + j1.25}$$

$$I_x = j0.5\frac{30\angle 30°}{3 + j1.25} = \underline{4.615\angle 97.38°\,A}$$

Chapter 10, Solution 6.

Let V_o be the voltage across the current source. Using nodal analysis we get:

$$\frac{V_o - 4V_x}{20} - 3 + \frac{V_o}{20 + j10} = 0 \quad \text{where } V_x = \frac{20}{20 + j10}V_o$$

Combining these we get:

$$\frac{V_o}{20} - \frac{4V_o}{20 + j10} - 3 + \frac{V_o}{20 + j10} = 0 \rightarrow (1 + j0.5 - 3)V_o = 60 + j30$$

$$V_o = \frac{60 + j30}{-2 + j0.5} \text{ or } V_x = \frac{20(3)}{-2 + j0.5} = \underline{\mathbf{29.11\angle{-166}°\ V}}.$$

Chapter 10, Solution 7.

At the main node,

$$\frac{120\angle -15^o - V}{40 + j20} = 6\angle 30^o + \frac{V}{-j30} + \frac{V}{50} \quad \longrightarrow \quad \frac{115.91 - j31.058}{40 + j20} - 5.196 - j3 =$$
$$V\left(\frac{1}{40 + j20} + \frac{j}{30} + \frac{1}{50}\right)$$

$$V = \frac{-3.1885 - j4.7805}{0.04 + j0.0233} = \underline{124.08\angle -154^o \ \text{V}}$$

Chapter 10, Solution 8.

$\omega = 200,$

$100\text{mH} \quad \longrightarrow \quad j\omega L = j200x0.1 = j20$

$50\mu\text{F} \quad \longrightarrow \quad \dfrac{1}{j\omega C} = \dfrac{1}{j200x50x10^{-6}} = -j100$

The frequency-domain version of the circuit is shown below.

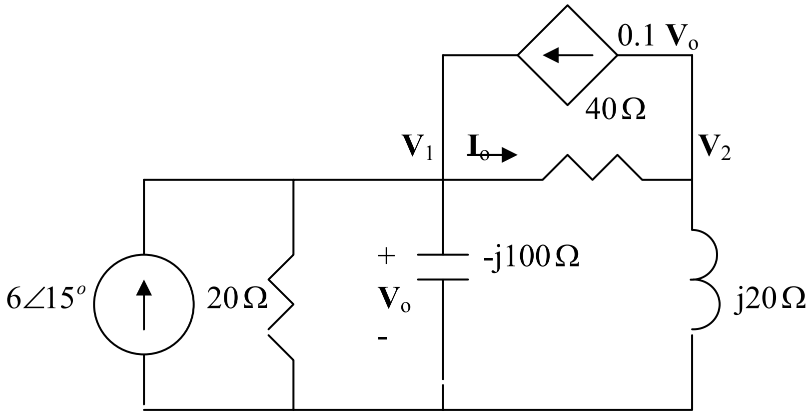

At node 1,

$$6\angle 15^o + 0.1V_1 = \frac{V_1}{20} + \frac{V_1}{-j100} + \frac{V_1 - V_2}{40}$$

or $\qquad 5.7955 + j1.5529 = (-0.025 + j0.01)V_1 - 0.025V_2 \qquad (1)$

At node 2,

$$\frac{V_1 - V_2}{40} = 0.1V_1 + \frac{V_2}{j20} \longrightarrow 0 = 3V_1 + (1 - j2)V_2 \qquad (2)$$

From (1) and (2),

$$\begin{bmatrix} (-0.025 + j0.01) & -0.025 \\ 3 & (1 - j2) \end{bmatrix} \begin{pmatrix} V_1 \\ V_2 \end{pmatrix} = \begin{pmatrix} (5.7955 + j1.5529) \\ 0 \end{pmatrix} \quad \text{or} \quad AV = B$$

Using MATLAB,

$$V = \text{inv}(A)^*B$$

leads to $V_1 = -70.63 - j127.23, \qquad V_2 = -110.3 + j161.09$

$$I_o = \frac{V_1 - V_2}{40} = 7.276\angle -82.17^o$$

Thus,

$$\underline{i_o(t) = 7.276\cos(200t - 82.17^o)\ \text{A}}$$

Chapter 10, Solution 9.

$$10\cos(10^3 t) \longrightarrow 10\angle 0°, \quad \omega = 10^3$$

$$10\text{ mH} \longrightarrow j\omega L = j10$$

$$50\ \mu\text{F} \longrightarrow \frac{1}{j\omega C} = \frac{1}{j(10^3)(50 \times 10^{-6})} = \text{-}j20$$

Consider the circuit shown below.

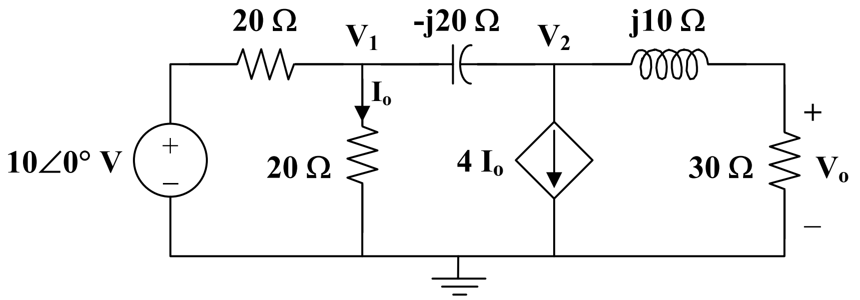

At node 1,

$$\frac{10 - \mathbf{V}_1}{20} = \frac{\mathbf{V}_1}{20} + \frac{\mathbf{V}_1 - \mathbf{V}_2}{\text{-}\ j20}$$

$$10 = (2 + j)\mathbf{V}_1 - j\mathbf{V}_2 \qquad (1)$$

At node 2,

$$\frac{\mathbf{V}_1 - \mathbf{V}_2}{\text{- j20}} = (4)\frac{\mathbf{V}_1}{20} + \frac{\mathbf{V}_2}{30 + \text{j}10}, \text{ where } \mathbf{I}_o = \frac{\mathbf{V}_1}{20} \text{ has been substituted.}$$

$$(\text{-}4 + \text{j})\,\mathbf{V}_1 = (0.6 + \text{j}0.8)\,\mathbf{V}_2$$

$$\mathbf{V}_1 = \frac{0.6 + \text{j}0.8}{\text{-}4 + \text{j}}\mathbf{V}_2 \qquad (2)$$

Substituting (2) into (1)

$$10 = \frac{(2 + \text{j})(0.6 + \text{j}0.8)}{\text{-}4 + \text{j}}\mathbf{V}_2 - \text{j}\mathbf{V}_2$$

or $$\mathbf{V}_2 = \frac{170}{0.6 - \text{j}26.2}$$

$$\mathbf{V}_o = \frac{30}{30 + \text{j}10}\mathbf{V}_2 = \frac{3}{3 + \text{j}} \cdot \frac{170}{0.6 - \text{j}26.2} = 6.154\angle 70.26°$$

Therefore, $v_o(t) =$ **$6.154 \cos(10^3 t + 70.26°)$ V**

Chapter 10, Solution 10.

$$50\text{ mH} \longrightarrow \text{j}\omega L = \text{j}2000\text{x}50\text{x}10^{-3} = \text{j}100, \qquad \omega = 2000$$

$$2\mu\text{F} \longrightarrow \frac{1}{\text{j}\omega C} = \frac{1}{\text{j}2000\text{x}2\text{x}10^{-6}} = -\text{j}250$$

Consider the frequency-domain equivalent circuit below.

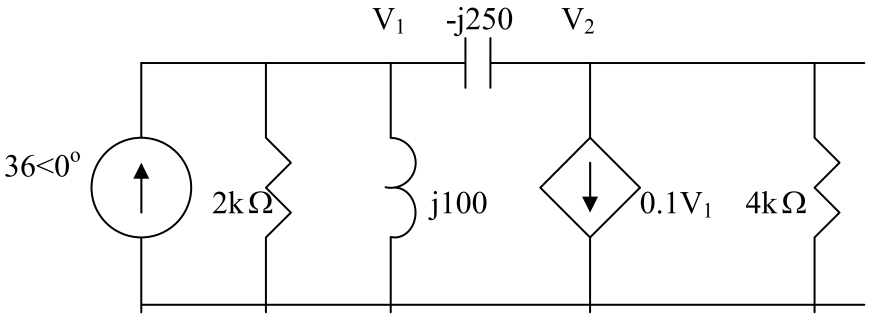

At node 1,

$$36 = \frac{V_1}{2000} + \frac{V_1}{j100} + \frac{V_1 - V_2}{-j250} \longrightarrow 36 = (0.0005 - j0.006)V_1 - j0.004V_2 \quad (1)$$

At node 2,

$$\frac{V_1 - V_2}{-j250} = 0.1V_1 + \frac{V_2}{4000} \longrightarrow 0 = (0.1 - j0.004)V_1 + (0.00025 + j0.004)V_2 \quad (2)$$

Solving (1) and (2) gives

$$V_o = V_2 = -535.6 + j893.5 = 8951.1\angle 93.43^o$$

v_o (t) = **8.951 sin(2000t +93.43°) kV**

Chapter 10, Solution 11.

$$\cos(2t) \longrightarrow 1\angle 0°, \quad \omega = 2$$
$$8\sin(2t + 30°) \longrightarrow 8\angle -60°$$

$$1\text{ H} \longrightarrow j\omega L = j2 \qquad 1/2\text{ F} \longrightarrow \frac{1}{j\omega C} = \frac{1}{j(2)(1/2)} = -j$$

$$2\text{ H} \longrightarrow j\omega L = j4 \qquad 1/4\text{ F} \longrightarrow \frac{1}{j\omega C} = \frac{1}{j(2)(1/4)} = -j2$$

Consider the circuit below.

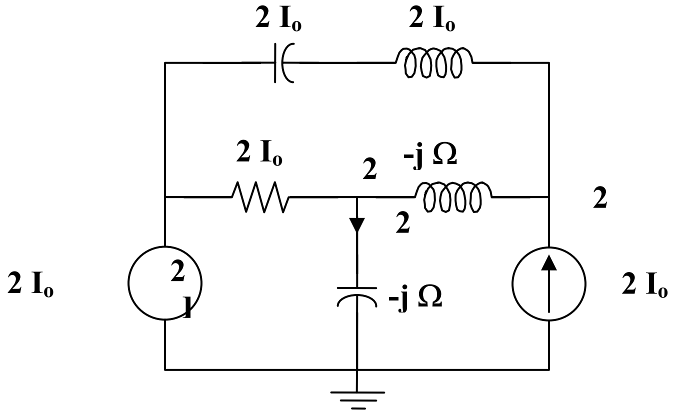

At node 1,

$$\frac{(8\angle -60°) - \mathbf{V}_1}{2} = \frac{\mathbf{V}_1}{-j} + \frac{\mathbf{V}_1 - \mathbf{V}_2}{j2}$$

$$8\angle -60° = (1 + j)\mathbf{V}_1 + j\mathbf{V}_2 \qquad (1)$$

At node 2,

$$1 + \frac{\mathbf{V}_1 - \mathbf{V}_2}{j2} + \frac{(8\angle -60°) - \mathbf{V}_2}{j4 - j2} = 0$$

$$\mathbf{V}_2 = 4\angle -60° + j + 0.5\mathbf{V}_1 \qquad (2)$$

Substituting (2) into (1),

$$1 + 8\angle -60° - 4\angle 30° = (1 + j1.5)\mathbf{V}_1$$

$$\mathbf{V}_1 = \frac{1 + 8\angle -60° - 4\angle 30°}{1 + j1.5}$$

$$\mathbf{I}_o = \frac{\mathbf{V}_1}{-j} = \frac{1 + 8\angle -60° - 4\angle 30°}{1.5 - j} = 5.024\angle -46.55°$$

Therefore, $i_o(t) =$ **<u>5.024 cos(2t – 46.55°)</u>**

Chapter 10, Solution 12.

$$20\sin(1000t) \longrightarrow 20\angle 0°, \quad \omega = 1000$$

$$10 \text{ mH} \longrightarrow j\omega L = j10$$

$$50\ \mu\text{F} \longrightarrow \frac{1}{j\omega C} = \frac{1}{j(10^3)(50 \times 10^{-6})} = -j20$$

The frequency-domain equivalent circuit is shown below.

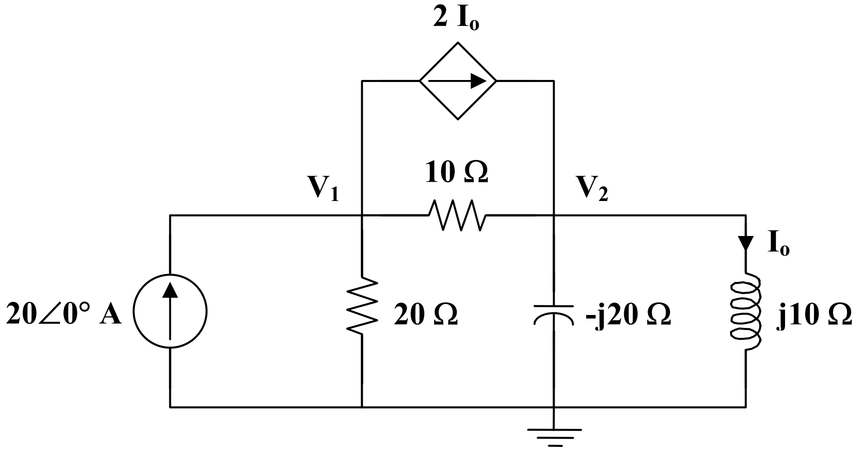

At node 1,

$$20 = 2\mathbf{I}_o + \frac{\mathbf{V}_1}{20} + \frac{\mathbf{V}_1 - \mathbf{V}_2}{10},$$

where

$$\mathbf{I}_o = \frac{\mathbf{V}_2}{j10}$$

$$20 = \frac{2\mathbf{V}_2}{j10} + \frac{\mathbf{V}_1}{20} + \frac{\mathbf{V}_1 - \mathbf{V}_2}{10}$$

$$400 = 3\mathbf{V}_1 - (2 + j4)\mathbf{V}_2 \qquad (1)$$

At node 2,

$$\frac{2\mathbf{V}_2}{j10} + \frac{\mathbf{V}_1 - \mathbf{V}_2}{10} = \frac{\mathbf{V}_2}{-j20} + \frac{\mathbf{V}_2}{j10}$$

$$j2\mathbf{V}_1 = (-3 + j2)\mathbf{V}_2$$

or

$$\mathbf{V}_1 = (1 + j1.5)\mathbf{V}_2 \qquad (2)$$

Substituting (2) into (1),

$$400 = (3 + j4.5)\mathbf{V}_2 - (2 + j4)\mathbf{V}_2 = (1 + j0.5)\mathbf{V}_2$$

$$\mathbf{V}_2 = \frac{400}{1 + j0.5}$$

$$\mathbf{I}_o = \frac{\mathbf{V}_2}{j10} = \frac{40}{j(1 + j0.5)} = 35.74\angle -116.6^\circ$$

Therefore, $i_o(t) =$ **35.74 sin(1000t – 116.6°) A**

Chapter 10, Solution 13.

Nodal analysis is the best approach to use on this problem. We can make our work easier by doing a source transformation on the right hand side of the circuit.

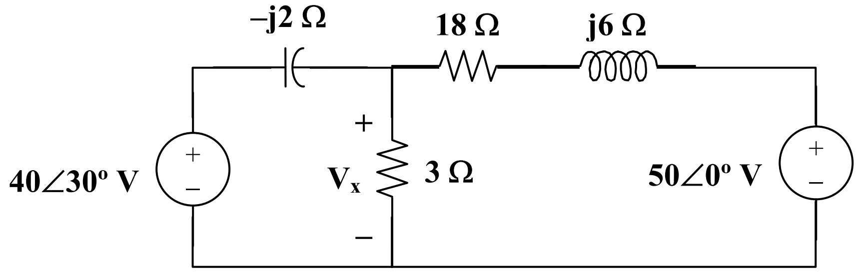

$$\frac{V_x - 40\angle 30°}{-j2} + \frac{V_x}{3} + \frac{V_x - 50}{18 + j6} = 0$$

which leads to V_x = **$29.36\angle 62.88°$ A**.

Chapter 10, Solution 14.

At node 1,

$$\frac{0 - \mathbf{V}_1}{-j2} + \frac{0 - \mathbf{V}_1}{10} + \frac{\mathbf{V}_2 - \mathbf{V}_1}{j4} = 20\angle 30°$$

$$-(1 + j2.5)\mathbf{V}_1 - j2.5\mathbf{V}_2 = 173.2 + j100 \qquad (1)$$

At node 2,

$$\frac{\mathbf{V}_2}{j2} + \frac{\mathbf{V}_2}{-j5} + \frac{\mathbf{V}_2 - \mathbf{V}_1}{j4} = 20\angle 30°$$

$$-j5.5\mathbf{V}_2 + j2.5\mathbf{V}_1 = 173.2 + j100 \qquad (2)$$

Equations (1) and (2) can be cast into matrix form as

$$\begin{bmatrix} 1 + j2.5 & j2.5 \\ j2.5 & -j5.5 \end{bmatrix} \begin{bmatrix} \mathbf{V}_1 \\ \mathbf{V}_2 \end{bmatrix} = \begin{bmatrix} -200\angle 30° \\ 200\angle 30° \end{bmatrix}$$

$$\Delta = \begin{vmatrix} 1 + j2.5 & j2.5 \\ j2.5 & -j5.5 \end{vmatrix} = 20 - j5.5 = 20.74\angle -15.38°$$

$$\Delta_1 = \begin{vmatrix} -200\angle 30° & j2.5 \\ 200\angle 30° & -j5.5 \end{vmatrix} = j3(200\angle 30°) = 600\angle 120°$$

$$\Delta_2 = \begin{vmatrix} 1 + j2.5 & -200\angle 30° \\ j2.5 & 200\angle 30° \end{vmatrix} = (200\angle 30°)(1 + j5) = 1020\angle 108.7°$$

$$\mathbf{V}_1 = \frac{\Delta_1}{\Delta} = 28.93\angle 135.38°$$

$$\mathbf{V}_2 = \frac{\Delta_2}{\Delta} = 49.18\angle 124.08°$$

Chapter 10, Solution 15.

We apply nodal analysis to the circuit shown below.

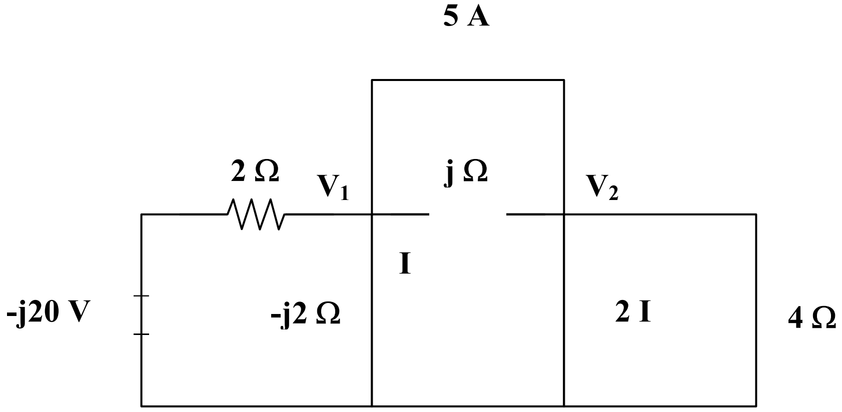

At node 1,

$$\frac{-j20 - \mathbf{V}_1}{2} = 5 + \frac{\mathbf{V}_1}{-j2} + \frac{\mathbf{V}_1 - \mathbf{V}_2}{j}$$

$$-5 - j10 = (0.5 - j0.5)\,\mathbf{V}_1 + j\,\mathbf{V}_2 \qquad (1)$$

At node 2,

$$5 + 2\mathbf{I} + \frac{\mathbf{V}_1 - \mathbf{V}_2}{j} = \frac{\mathbf{V}_2}{4},$$

where $\mathbf{I} = \dfrac{\mathbf{V}_1}{-j2}$

$$\mathbf{V}_2 = \frac{5}{0.25 - j}\mathbf{V}_1$$

(2)

Substituting (2) into (1),

$$-5 - j10 - \frac{j5}{0.25 - j} = 0.5(1 - j)\,\mathbf{V}_1$$

$$(1 - j)\,\mathbf{V}_1 = -10 - j20 - \frac{j40}{1 - j4}$$

$$(\sqrt{2}\angle -45°)\,\mathbf{V}_1 = -10 - j20 + \frac{160}{17} - \frac{j40}{17}$$

$$\mathbf{V}_1 = 15.81\angle 313.5°$$

$$\mathbf{I} = \frac{\mathbf{V}_1}{-j2} = (0.5\angle 90°)(15.81\angle 313.5°)$$

$$\mathbf{I} = \underline{\mathbf{7.906\angle 43.49°\ A}}$$

Chapter 10, Solution 16.

At node 1,

$$j2 = \frac{\mathbf{V}_1}{20} + \frac{\mathbf{V}_1 - \mathbf{V}_2}{10} + \frac{\mathbf{V}_1 - \mathbf{V}_2}{-j5}$$
$$j40 = (3 + j4)\,\mathbf{V}_1 - (2 + j4)\,\mathbf{V}_2$$

At node 2,

$$\frac{\mathbf{V}_1 - \mathbf{V}_2}{10} + \frac{\mathbf{V}_1 - \mathbf{V}_2}{-j5} + 1 + j = \frac{\mathbf{V}_2}{j10}$$
$$10\,(1 + j) = -(1 + j2)\,\mathbf{V}_1 + (1 + j)\,\mathbf{V}_2$$

Thus,

$$\begin{bmatrix} j40 \\ 10\,(1+j) \end{bmatrix} = \begin{bmatrix} 3 + j4 & -2\,(1 + j2) \\ -(1 + j2) & 1 + j \end{bmatrix} \begin{bmatrix} \mathbf{V}_1 \\ \mathbf{V}_2 \end{bmatrix}$$

$$\Delta = \begin{vmatrix} 3 + j4 & -2\,(1 + j2) \\ -(1 + j2) & 1 + j \end{vmatrix} = 5 - j = 5.099\angle -11.31°$$

$$\Delta_1 = \begin{vmatrix} j40 & -2\,(1 + j2) \\ 10\,(1 + j) & 1 + j \end{vmatrix} = -60 + j100 = 116.62\angle 120.96°$$

$$\Delta_2 = \begin{vmatrix} 3 + j4 & j40 \\ -(1 + j2) & 10\,(1 + j) \end{vmatrix} = -90 + j110 = 142.13\angle 129.29°$$

$$\mathbf{V}_1 = \frac{\Delta_1}{\Delta} = \underline{\mathbf{22.87\angle 132.27°\ V}}$$
$$\mathbf{V}_2 = \frac{\Delta_2}{\Delta} = \underline{\mathbf{27.87\angle 140.6°\ V}}$$

Chapter 10, Solution 17.

Consider the circuit below.

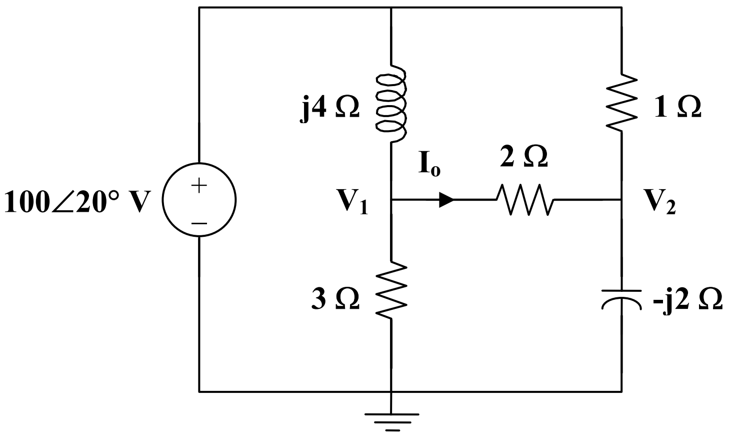

At node 1,

$$\frac{100\angle 20° - \mathbf{V}_1}{j4} = \frac{\mathbf{V}_1}{3} + \frac{\mathbf{V}_1 - \mathbf{V}_2}{2}$$

$$100\angle 20° = \frac{\mathbf{V}_1}{3}(3 + j10) - j2\,\mathbf{V}_2 \qquad (1)$$

At node 2,

$$\frac{100\angle 20° - \mathbf{V}_2}{1} + \frac{\mathbf{V}_1 - \mathbf{V}_2}{2} = \frac{\mathbf{V}_2}{-\,j2}$$

$$100\angle 20° = -0.5\,\mathbf{V}_1 + (1.5 + j0.5)\,\mathbf{V}_2 \qquad (2)$$

From (1) and (2),

$$\begin{bmatrix} 100\angle 20° \\ 100\angle 20° \end{bmatrix} = \begin{bmatrix} -0.5 & 0.5\,(3 + j) \\ 1 + j10/3 & -\,j2 \end{bmatrix} \begin{bmatrix} \mathbf{V}_1 \\ \mathbf{V}_2 \end{bmatrix}$$

$$\Delta = \begin{vmatrix} -0.5 & 1.5 + j0.5 \\ 1 + j10/3 & -\,j2 \end{vmatrix} = 0.1667 - j4.5$$

$$\Delta_1 = \begin{vmatrix} 100\angle 20° & 1.5 + j0.5 \\ 100\angle 20° & -\,j2 \end{vmatrix} = -55.45 - j286.2$$

$$\Delta_2 = \begin{vmatrix} -0.5 & 100\angle 20° \\ 1 + j10/3 & 100\angle 20° \end{vmatrix} = -26.95 - j364.5$$

$$\mathbf{V}_1 = \frac{\Delta_1}{\Delta} = 64.74\angle\text{-}13.08°$$

$$\mathbf{V}_2 = \frac{\Delta_2}{\Delta} = 81.17\angle\text{-}6.35°$$

$$\mathbf{I}_o = \frac{\mathbf{V}_1 - \mathbf{V}_2}{2} = \frac{\Delta_1 - \Delta_2}{2\Delta} = \frac{-28.5 + j78.31}{0.3333 - j9}$$

$$\mathbf{I}_o = 9.25\angle\text{-}162.12°$$

Chapter 10, Solution 18.

Consider the circuit shown below.

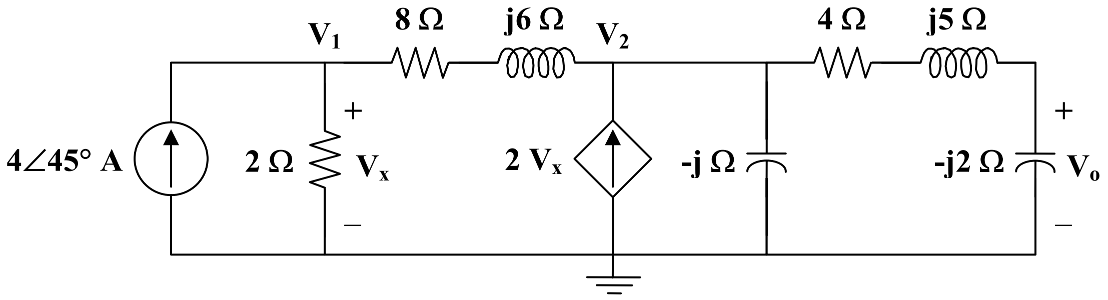

At node 1,

$$4\angle 45° = \frac{\mathbf{V}_1}{2} + \frac{\mathbf{V}_1 - \mathbf{V}_2}{8 + j6}$$

$$200\angle 45° = (29 - j3)\,\mathbf{V}_1 - (4 - j3)\,\mathbf{V}_2 \qquad (1)$$

At node 2,

$$\frac{\mathbf{V}_1 - \mathbf{V}_2}{8 + j6} + 2\mathbf{V}_x = \frac{\mathbf{V}_2}{-j} + \frac{\mathbf{V}_2}{4 + j5 - j2}, \qquad \text{where } \mathbf{V}_x = \mathbf{V}_1$$

$$(104 - j3)\,\mathbf{V}_1 = (12 + j41)\,\mathbf{V}_2$$

$$\mathbf{V}_1 = \frac{12 + j41}{104 - j3}\mathbf{V}_2 \qquad (2)$$

Substituting (2) into (1),

$$200\angle 45° = (29 - j3)\frac{(12 + j41)}{104 - j3}\mathbf{V}_2 - (4 - j3)\,\mathbf{V}_2$$

$$200\angle 45° = (14.21\angle 89.17°)\,\mathbf{V}_2$$

$$\mathbf{V}_2 = \frac{200\angle 45°}{14.21\angle 89.17°}$$

$$\mathbf{V}_o = \frac{-j2}{4 + j5 - j2}\mathbf{V}_2 = \frac{-j2}{4 + j3}\mathbf{V}_2 = \frac{-6 - j8}{25}\mathbf{V}_2$$

$$\mathbf{V}_o = \frac{10\angle 233.13°}{25} \cdot \frac{200\angle 45°}{14.21\angle 89.17°}$$

$$\mathbf{V}_o = \underline{\mathbf{5.63\angle 189°\ V}}$$

Chapter 10, Solution 19.

We have a supernode as shown in the circuit below.

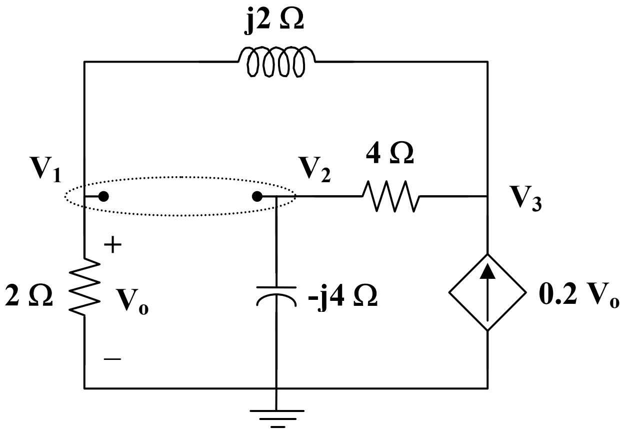

Notice that $\mathbf{V}_o = \mathbf{V}_1$.

At the supernode,

$$\frac{\mathbf{V}_3 - \mathbf{V}_2}{4} = \frac{\mathbf{V}_2}{-j4} + \frac{\mathbf{V}_1}{2} + \frac{\mathbf{V}_1 - \mathbf{V}_3}{j2}$$

$$0 = (2 - j2)\mathbf{V}_1 + (1 + j)\mathbf{V}_2 + (-1 + j2)\mathbf{V}_3 \qquad (1)$$

At node 3,

$$0.2\mathbf{V}_1 + \frac{\mathbf{V}_1 - \mathbf{V}_3}{j2} = \frac{\mathbf{V}_3 - \mathbf{V}_2}{4}$$

$$(0.8 - j2)\mathbf{V}_1 + \mathbf{V}_2 + (-1 + j2)\mathbf{V}_3 = 0 \qquad (2)$$

Subtracting (2) from (1),

$$0 = 1.2\mathbf{V}_1 + j\mathbf{V}_2 \qquad (3)$$

But at the supernode,

$$\mathbf{V}_1 = 12\angle 0° + \mathbf{V}_2$$

or $$\mathbf{V}_2 = \mathbf{V}_1 - 12 \qquad (4)$$

Substituting (4) into (3),

$$0 = 1.2\mathbf{V}_1 + j(\mathbf{V}_1 - 12)$$

$$\mathbf{V}_1 = \frac{j12}{1.2 + j} = \mathbf{V}_o$$

$$\mathbf{V}_o = \frac{12\angle 90°}{1.562\angle 39.81°}$$

$$\mathbf{V}_o = \underline{\mathbf{7.682\angle 50.19°\ V}}$$

Chapter 10, Solution 20.

The circuit is converted to its frequency-domain equivalent circuit as shown below.

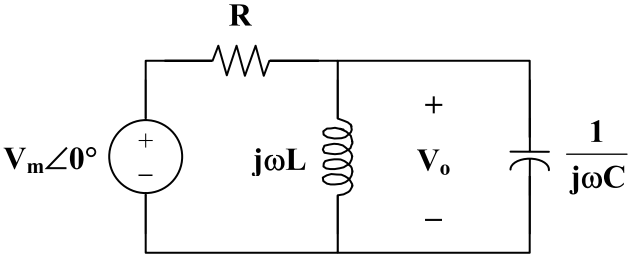

Let $$\mathbf{Z} = j\omega L \parallel \frac{1}{j\omega C} = \frac{\frac{L}{C}}{j\omega L + \frac{1}{j\omega C}} = \frac{j\omega L}{1 - \omega^2 LC}$$

$$\mathbf{V}_o = \frac{\mathbf{Z}}{R + \mathbf{Z}} V_m = \frac{\frac{j\omega L}{1-\omega^2 LC}}{R + \frac{j\omega L}{1-\omega^2 LC}} V_m = \frac{j\omega L}{R(1-\omega^2 LC) + j\omega L} V_m$$

$$\mathbf{V}_o = \frac{\omega L\, V_m}{\sqrt{R^2 (1-\omega^2 LC)^2 + \omega^2 L^2}} \angle\left(90° - \tan^{-1}\frac{\omega L}{R(1-\omega^2 LC)}\right)$$

If $\quad \mathbf{V}_o = A\angle\phi$, then

$$A = \underline{\frac{\boldsymbol{\omega L V_m}}{\sqrt{\mathbf{R^2(1-\omega^2 LC)^2 + \omega^2 L^2}}}}$$

and $\quad \underline{\phi = \mathbf{90° - tan^{-1} \frac{\omega L}{R(1-\omega^2 LC)}}}$

Chapter 10, Solution 21.

(a) $$\frac{\mathbf{V}_o}{\mathbf{V}_i} = \frac{\frac{1}{j\omega C}}{R + j\omega L + \frac{1}{j\omega C}} = \frac{1}{1 - \omega^2 LC + j\omega RC}$$

At $\omega = 0$, $\quad \frac{\mathbf{V}_o}{\mathbf{V}_i} = \frac{1}{1} = \underline{\mathbf{1}}$

As $\omega \to \infty$, $\quad \frac{\mathbf{V}_o}{\mathbf{V}_i} = \underline{\mathbf{0}}$

At $\omega = \frac{1}{\sqrt{LC}}$, $\quad \frac{\mathbf{V}_o}{\mathbf{V}_i} = \frac{1}{jRC \cdot \frac{1}{\sqrt{LC}}} = \underline{\mathbf{\frac{-j}{R}\sqrt{\frac{L}{C}}}}$

(b) $$\frac{\mathbf{V}_o}{\mathbf{V}_i} = \frac{j\omega L}{R + j\omega L + \frac{1}{j\omega C}} = \frac{-\omega^2 LC}{1 - \omega^2 LC + j\omega RC}$$

At $\omega = 0$, $\quad \frac{\mathbf{V}_o}{\mathbf{V}_i} = \underline{\mathbf{0}}$

As $\omega \to \infty$, $\quad \frac{\mathbf{V}_o}{\mathbf{V}_i} = \frac{1}{1} = \underline{\mathbf{1}}$

At $\omega = \frac{1}{\sqrt{LC}}$, $\quad \frac{\mathbf{V}_o}{\mathbf{V}_i} = \frac{-1}{jRC \cdot \frac{1}{\sqrt{LC}}} = \underline{\mathbf{\frac{j}{R}\sqrt{\frac{L}{C}}}}$

Chapter 10, Solution 22.

Consider the circuit in the frequency domain as shown below.

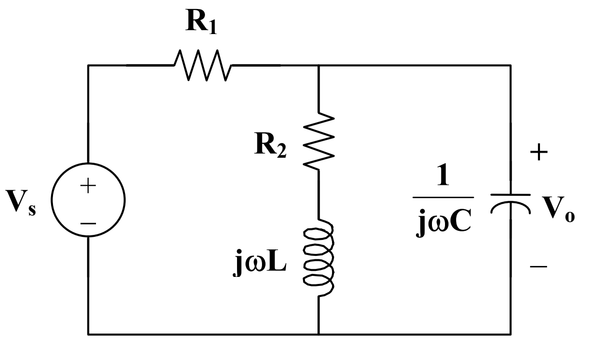

Let $\mathbf{Z} = (R_2 + j\omega L) \,||\, \dfrac{1}{j\omega C}$

$$\mathbf{Z} = \frac{\frac{1}{j\omega C}(R_2 + j\omega L)}{R_2 + j\omega L + \frac{1}{j\omega C}} = \frac{R_2 + j\omega L}{1 + j\omega R_2 - \omega^2 LC}$$

$$\frac{\mathbf{V}_o}{\mathbf{V}_s} = \frac{\mathbf{Z}}{\mathbf{Z} + R_1} = \frac{\dfrac{R_2 + j\omega L}{1 - \omega^2 LC + j\omega R_2 C}}{R_1 + \dfrac{R_2 + j\omega L}{1 - \omega^2 LC + j\omega R_2 C}}$$

$$\frac{\mathbf{V}_o}{\mathbf{V}_s} = \underline{\frac{\mathbf{R_2 + j\omega L}}{\mathbf{R_1 + R_2 - \omega^2 LCR_1 + j\omega(L + R_1 R_2 C)}}}$$

Chapter 10, Solution 23.

$$\frac{V - V_S}{R} + \frac{V}{j\omega L + \frac{1}{j\omega C}} + j\omega CV = 0$$

$$V + \frac{j\omega RCV}{-\omega^2 LC + 1} + j\omega RCV = V_S$$

$$\left(\frac{1 - \omega^2 LC + j\omega RC + j\omega RC - j\omega^3 RLC^2}{1 - \omega^2 LC}\right) V = V_S$$

$$V = \frac{(1-\omega^2 LC)V_s}{1-\omega^2 LC + j\omega RC(2-\omega^2 LC)}$$

Chapter 10, Solution 24.

For mesh 1,

$$\mathbf{V}_s = \left(\frac{1}{j\omega C_1} + \frac{1}{j\omega C_2}\right)\mathbf{I}_1 - \frac{1}{j\omega C_2}\mathbf{I}_2 \qquad (1)$$

For mesh 2,

$$0 = \frac{-1}{j\omega C_2}\mathbf{I}_1 + \left(R + j\omega L + \frac{1}{j\omega C_2}\right)\mathbf{I}_2 \qquad (2)$$

Putting (1) and (2) into matrix form,

$$\begin{bmatrix} \mathbf{V}_s \\ 0 \end{bmatrix} = \begin{bmatrix} \frac{1}{j\omega C_1} + \frac{1}{j\omega C_2} & \frac{-1}{j\omega C_2} \\ \frac{-1}{j\omega C_2} & R + j\omega L + \frac{1}{j\omega C_2} \end{bmatrix} \begin{bmatrix} \mathbf{I}_1 \\ \mathbf{I}_2 \end{bmatrix}$$

$$\Delta = \left(\frac{1}{j\omega C_1} + \frac{1}{j\omega C_2}\right)\left(R + j\omega L + \frac{1}{j\omega C_2}\right) + \frac{1}{\omega^2 C_1 C_2}$$

$$\Delta_1 = \mathbf{V}_s\left(R + j\omega L + \frac{1}{j\omega C_2}\right) \quad \text{and} \quad \Delta_2 = \frac{\mathbf{V}_s}{j\omega C_2}$$

$$\mathbf{I}_1 = \frac{\Delta_1}{\Delta} = \frac{\mathbf{V}_s\left(\mathbf{R} + \mathbf{j\omega L} + \frac{\mathbf{1}}{\mathbf{j\omega C_2}}\right)}{\left(\frac{\mathbf{1}}{\mathbf{j\omega C_1}} + \frac{\mathbf{1}}{\mathbf{j\omega C_2}}\right)\left(\mathbf{R} + \mathbf{j\omega L} + \frac{\mathbf{1}}{\mathbf{j\omega C_2}}\right) + \frac{\mathbf{1}}{\boldsymbol{\omega}^2\mathbf{C_1 C_2}}}$$

$$\mathbf{I}_2 = \frac{\Delta_2}{\Delta} = \frac{\frac{\mathbf{V}_s}{\mathbf{j\omega C_2}}}{\left(\frac{\mathbf{1}}{\mathbf{j\omega C_1}} + \frac{\mathbf{1}}{\mathbf{j\omega C_2}}\right)\left(\mathbf{R} + \mathbf{j\omega L} + \frac{\mathbf{1}}{\mathbf{j\omega C_2}}\right) + \frac{\mathbf{1}}{\boldsymbol{\omega}^2\mathbf{C_1 C_2}}}$$

Chapter 10, Solution 25.

$$\omega = 2$$

$$10\cos(2t) \longrightarrow 10\angle 0°$$

$$6\sin(2t) \longrightarrow 6\angle -90° = -j6$$

$$2\text{ H} \longrightarrow j\omega L = j4$$

$$0.25\text{ F} \longrightarrow \frac{1}{j\omega C} = \frac{1}{j(2)(1/4)} = -j2$$

The circuit is shown below.

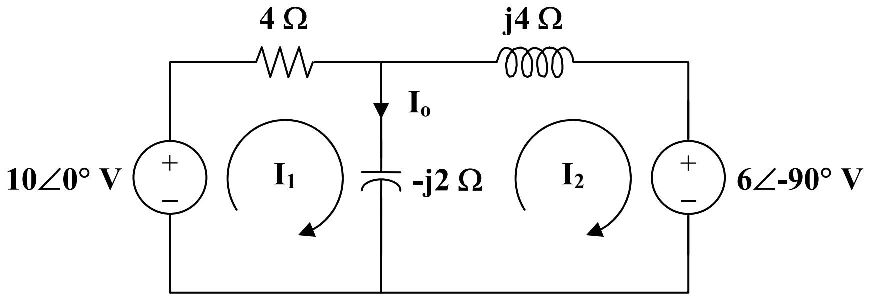

For loop 1,

$$-10 + (4 - j2)\mathbf{I}_1 + j2\mathbf{I}_2 = 0$$

$$5 = (2 - j)\mathbf{I}_1 + j\mathbf{I}_2 \qquad (1)$$

For loop 2,

$$j2\mathbf{I}_1 + (j4 - j2)\mathbf{I}_2 + (-j6) = 0$$

$$\mathbf{I}_1 + \mathbf{I}_2 = 3 \qquad (2)$$

In matrix form (1) and (2) become

$$\begin{bmatrix} 2-j & j \\ 1 & 1 \end{bmatrix} \begin{bmatrix} \mathbf{I}_1 \\ \mathbf{I}_2 \end{bmatrix} = \begin{bmatrix} 5 \\ 3 \end{bmatrix}$$

$$\Delta = 2(1 - j), \qquad \Delta_1 = 5 - j3, \qquad \Delta_2 = 1 - j3$$

$$\mathbf{I}_o = \mathbf{I}_1 - \mathbf{I}_2 = \frac{\Delta_1 - \Delta_2}{\Delta} = \frac{4}{2(1-j)} = 1 + j = 1.414\angle 45°$$

Therefore, $i_o(t) =$ <u>**1.414 cos(2t + 45°) A**</u>

Chapter 10, Solution 26.

We apply mesh analysis to the circuit shown below.

For mesh 1,

$$-10 + 40\mathbf{I}_1 - 20\mathbf{I}_2 = 0$$

$$1 = 4\mathbf{I}_1 - 2\mathbf{I}_2 \qquad (1)$$

For the supermesh,

$$(20 - j20)\mathbf{I}_2 - 20\mathbf{I}_1 + (30 + j10)\mathbf{I}_3 = 0$$

$$-2\mathbf{I}_1 + (2 - j2)\mathbf{I}_2 + (3 + j)\mathbf{I}_3 = 0 \qquad (2)$$

At node A,

$$\mathbf{I}_o = \mathbf{I}_1 - \mathbf{I}_2 \qquad (3)$$

At node B,

$$\mathbf{I}_2 = \mathbf{I}_3 + 4\mathbf{I}_o \qquad (4)$$

Substituting (3) into (4)

$$\mathbf{I}_2 = \mathbf{I}_3 + 4\mathbf{I}_1 - 4\mathbf{I}_2$$

$$\mathbf{I}_3 = 5\mathbf{I}_2 - 4\mathbf{I}_1 \qquad (5)$$

Substituting (5) into (2) gives

$$0 = -(14 + j4)\mathbf{I}_1 + (17 + j3)\mathbf{I}_2 \qquad (6)$$

From (1) and (6),

$$\begin{bmatrix} 1 \\ 0 \end{bmatrix} = \begin{bmatrix} 4 & -2 \\ -(14 + j4) & 17 + j3 \end{bmatrix} \begin{bmatrix} \mathbf{I}_1 \\ \mathbf{I}_2 \end{bmatrix}$$

$$\Delta = 40 + j4$$

$$\Delta_1 = \begin{vmatrix} 1 & -2 \\ 0 & 17 + j3 \end{vmatrix} = 17 + j3, \qquad \Delta_2 = \begin{vmatrix} 4 & 1 \\ -(14 + j4) & 0 \end{vmatrix} = 14 + j4$$

$$\mathbf{I}_3 = 5\mathbf{I}_2 - 4\mathbf{I}_1 = \frac{5\Delta_2 - 4\Delta_1}{\Delta} = \frac{2 + j8}{40 + j4}$$

$$\mathbf{V}_o = 30\mathbf{I}_3 = \frac{15(1 + j4)}{10 + j} = 6.154\angle 70.25°$$

Therefore, $v_o(t) =$ <u>**6.154 cos(10^3 t + 70.25°) V**</u>

Chapter 10, Solution 27.

For mesh 1,

$$-40\angle 30° + (j10 - j20)\mathbf{I}_1 + j20\mathbf{I}_2 = 0$$

$$4\angle 30° = -j\mathbf{I}_1 + j2\mathbf{I}_2 \qquad (1)$$

For mesh 2,

$$50\angle 0° + (40 - j20)\mathbf{I}_2 + j20\mathbf{I}_1 = 0$$

$$5 = -j2\mathbf{I}_1 - (4 - j2)\mathbf{I}_2 \qquad (2)$$

From (1) and (2),

$$\begin{bmatrix} 4\angle 30° \\ 5 \end{bmatrix} = \begin{bmatrix} -j & j2 \\ -j2 & -(4 - j2) \end{bmatrix} \begin{bmatrix} \mathbf{I}_1 \\ \mathbf{I}_2 \end{bmatrix}$$

$$\Delta = -2 + 4j = 4.472\angle 116.56°$$

$$\Delta_1 = -(4\angle 30°)(4 - j2) - j10 = 21.01\angle 211.8°$$

$$\Delta_2 = -j5 + 8\angle 120° = 4.44\angle 154.27°$$

$$\mathbf{I}_1 = \frac{\Delta_1}{\Delta} = \underline{\mathbf{4.698\angle 95.24°\ A}}$$

$$\mathbf{I}_2 = \frac{\Delta_2}{\Delta} = \underline{\mathbf{0.9928\angle 37.71°\ A}}$$

Chapter 10, Solution 28.

$$1\text{H} \longrightarrow j\omega L = j4, \qquad 1\text{F} \longrightarrow \frac{1}{j\omega C} = \frac{1}{j1x4} = -j0.25$$

The frequency-domain version of the circuit is shown below, where

$$V_1 = 10\angle 0^o, \qquad V_2 = 20\angle -30^o\ .$$

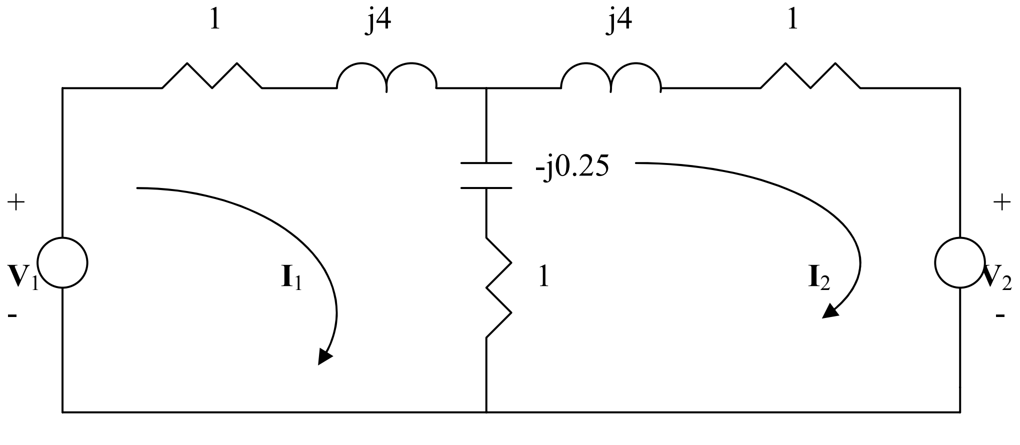

$$V_1 = 10\angle 0^o, \qquad V_2 = 20\angle -30^o$$

Applying mesh analysis,

$$10 = (2 + j3.75)I_1 - (1 - j0.25)I_2 \qquad (1)$$

$$-20\angle -30^o = -(1 - j0.025)I_1 + (2 + j3.75)I_2 \qquad (2)$$

From (1) and (2), we obtain

$$\begin{pmatrix} 10 \\ -17.32 + j10 \end{pmatrix} = \begin{pmatrix} 2 + j3.75 & -1 + j0.25 \\ -1 + j0.25 & 2 + j3.75 \end{pmatrix} \begin{pmatrix} I_1 \\ I_2 \end{pmatrix}$$

Solving this leads to

$$I_1 = 1.3602 - j0.9769 = 1.6747\angle -35.69^o, \quad I_2 = -4.1438 + j2.111 = 4.6505\angle 153^o$$

Hence,

$$\underline{i_1 = 1.675\cos(4t - 35.69^o)\ \text{A}, \qquad i_2 = 4.651\cos(46 + 153^o)\ \text{A}}$$

Chapter 10, Solution 29.

For mesh 1,

$$(5 + j5)\mathbf{I}_1 - (2 + j)\mathbf{I}_2 - 30\angle 20° = 0$$

$$30\angle 20° = (5 + j5)\mathbf{I}_1 - (2 + j)\mathbf{I}_2 \qquad (1)$$

For mesh 2,

$$(5 + j3 - j6)\mathbf{I}_2 - (2 + j)\mathbf{I}_1 = 0$$

$$0 = -(2 + j)\mathbf{I}_1 + (5 - j3)\mathbf{I}_2 \qquad (2)$$

From (1) and (2),

$$\begin{bmatrix} 30\angle 20° \\ 0 \end{bmatrix} = \begin{bmatrix} 5 + j5 & -(2 + j) \\ -(2 + j) & 5 - j3 \end{bmatrix} \begin{bmatrix} \mathbf{I}_1 \\ \mathbf{I}_2 \end{bmatrix}$$

$$\Delta = 37 + j6 = 37.48\angle 9.21°$$

$$\Delta_1 = (30\angle 20°)(5.831\angle -30.96°) = 175\angle -10.96°$$

$$\Delta_2 = (30\angle 20°)(2.356\angle 26.56°) = 67.08\angle 46.56°$$

$$\mathbf{I}_1 = \frac{\Delta_1}{\Delta} = \underline{\mathbf{4.67\angle -20.17°\ A}}$$

$$\mathbf{I}_2 = \frac{\Delta_2}{\Delta} = \underline{\mathbf{1.79\angle 37.35°\ A}}$$

Chapter 10, Solution 30.

Consider the circuit shown below.

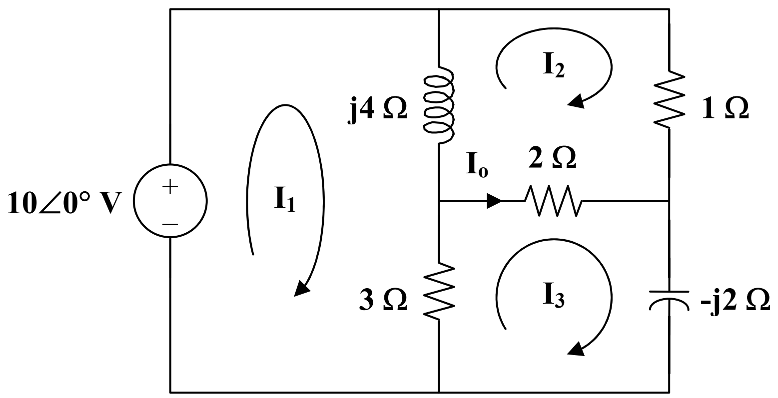

For mesh 1,

$$100\angle 20° = (3 + j4)\mathbf{I}_1 - j4\mathbf{I}_2 - 3\mathbf{I}_3 \qquad (1)$$

For mesh 2,

$$0 = \text{-}j4\mathbf{I}_1 + (3 + j4)\mathbf{I}_2 - j2\mathbf{I}_3 \qquad (2)$$

For mesh 3,

$$0 = \text{-}3\mathbf{I}_1 - 2\mathbf{I}_2 + (5 - j2)\mathbf{I}_3 \qquad (3)$$

Put (1), (2), and (3) into matrix form.

$$\begin{bmatrix} 3 + j4 & \text{-}j4 & \text{-}3 \\ \text{-}j4 & 3 + j4 & \text{-}j2 \\ \text{-}3 & \text{-}2 & 5 - j2 \end{bmatrix} \begin{bmatrix} \mathbf{I}_1 \\ \mathbf{I}_2 \\ \mathbf{I}_3 \end{bmatrix} = \begin{bmatrix} 100\angle 20° \\ 0 \\ 0 \end{bmatrix}$$

$$\Delta = \begin{vmatrix} 3 + j4 & \text{-}j4 & \text{-}3 \\ \text{-}j4 & 3 + j4 & \text{-}j2 \\ \text{-}3 & \text{-}2 & 5 - j2 \end{vmatrix} = 106 + j30$$

$$\Delta_2 = \begin{vmatrix} 3 + j4 & 100\angle 20° & \text{-}3 \\ \text{-}j4 & 0 & \text{-}j2 \\ \text{-}3 & 0 & 5 - j2 \end{vmatrix} = (100\angle 20°)(8 + j26)$$

$$\Delta_3 = \begin{vmatrix} 3 + j4 & \text{-}j4 & 100\angle 20° \\ \text{-}j4 & 3 + j4 & 0 \\ \text{-}3 & \text{-}2 & 0 \end{vmatrix} = (100\angle 20°)(9 + j20)$$

$$\mathbf{I}_o = \mathbf{I}_3 - \mathbf{I}_2 = \frac{\Delta_3 - \Delta_2}{\Delta} = \frac{(100\angle 20°)(1 - j6)}{106 + j30}$$

$$\mathbf{I}_o = \underline{\mathbf{5.521\angle\text{-}76.34°\ A}}$$

Chapter 10, Solution 31.

Consider the network shown below.

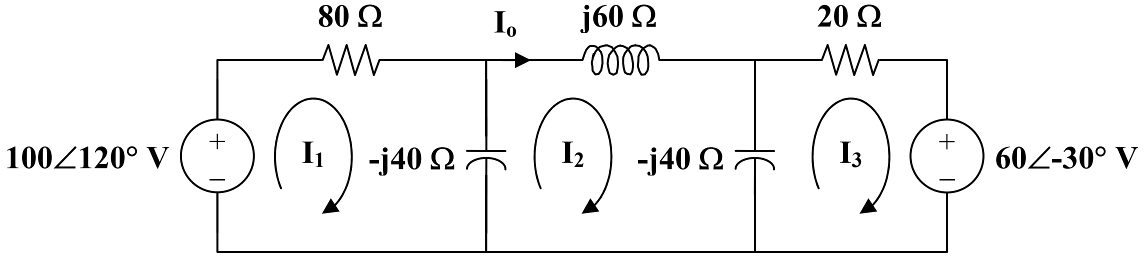

For loop 1,

$$-100\angle 20° + (80 - j40)\mathbf{I}_1 + j40\mathbf{I}_2 = 0$$

$$10\angle 20° = 4(2 - j)\mathbf{I}_1 + j4\mathbf{I}_2 \qquad (1)$$

For loop 2,

$$j40\mathbf{I}_1 + (j60 - j80)\mathbf{I}_2 + j40\mathbf{I}_3 = 0$$

$$0 = 2\mathbf{I}_1 - \mathbf{I}_2 + 2\mathbf{I}_3 \qquad (2)$$

For loop 3,

$$60\angle -30° + (20 - j40)\mathbf{I}_3 + j40\mathbf{I}_2 = 0$$

$$-6\angle -30° = j4\mathbf{I}_2 + 2(1 - j2)\mathbf{I}_3 \qquad (3)$$

From (2),

$$2\mathbf{I}_3 = \mathbf{I}_2 - 2\mathbf{I}_1$$

Substituting this equation into (3),

$$-6\angle -30° = -2(1 - j2)\mathbf{I}_1 + (1 + j2)\mathbf{I}_2 \qquad (4)$$

From (1) and (4),

$$\begin{bmatrix} 10\angle 120° \\ -6\angle -30° \end{bmatrix} = \begin{bmatrix} 4(2-j) & j4 \\ -2(1-j2) & 1+j2 \end{bmatrix} \begin{bmatrix} \mathbf{I}_1 \\ \mathbf{I}_2 \end{bmatrix}$$

$$\Delta = \begin{vmatrix} 8 - j4 & -j4 \\ -2 + j4 & 1 + j2 \end{vmatrix} = 32 + j20 = 37.74\angle 32°$$

$$\Delta_2 = \begin{vmatrix} 8 - j4 & 10\angle 120° \\ -2 + j4 & -6\angle -30° \end{vmatrix} = -4.928 + j82.11 = 82.25\angle 93.44°$$

$$\mathbf{I}_o = \mathbf{I}_2 = \frac{\Delta_2}{\Delta} = \underline{\mathbf{2.179\angle 61.44°\ A}}$$

Chapter 10, Solution 32.

Consider the circuit below.

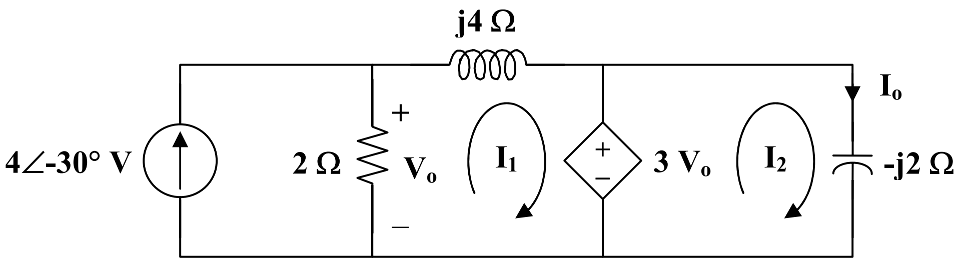

For mesh 1,

$$(2+j4)\mathbf{I}_1 - 2(4\angle\text{-}30°) + 3\mathbf{V}_o = 0$$

where
$$\mathbf{V}_o = 2(4\angle\text{-}30° - \mathbf{I}_1)$$

Hence,

$$(2+j4)\mathbf{I}_1 - 8\angle\text{-}30° + 6(4\angle\text{-}30° - \mathbf{I}_1) = 0$$
$$4\angle\text{-}30° = (1-j)\mathbf{I}_1$$

or
$$\mathbf{I}_1 = 2\sqrt{2}\angle 15°$$

$$\mathbf{I}_o = \frac{3\mathbf{V}_o}{\text{-}j2} = \frac{3}{\text{-}j2}(2)(4\angle\text{-}30° - \mathbf{I}_1)$$
$$\mathbf{I}_o = j3(4\angle\text{-}30° - 2\sqrt{2}\angle 15°)$$
$$\mathbf{I}_o = \underline{\mathbf{8.485\angle 15°\ A}}$$

$$\mathbf{V}_o = \frac{\text{-}j2\mathbf{I}_o}{3} = \underline{\mathbf{5.657\angle\text{-}75°\ V}}$$

Chapter 10, Solution 33.

Consider the circuit shown below.

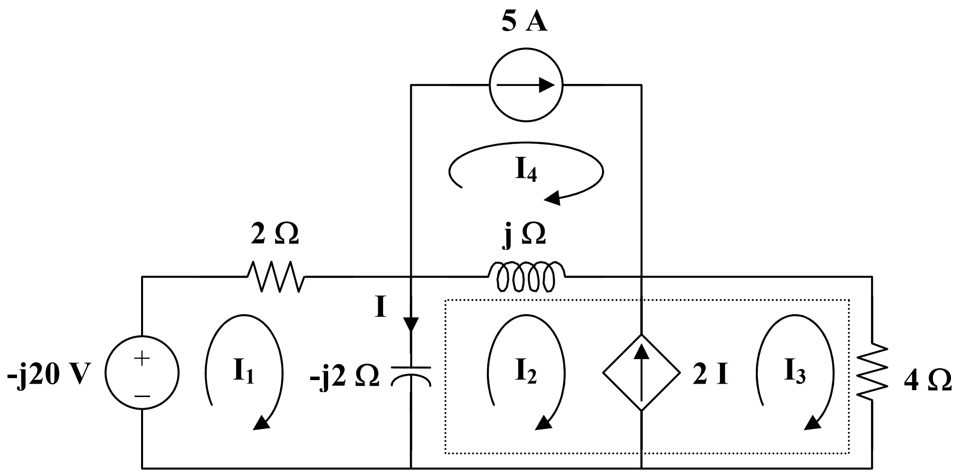

For mesh 1,

$$j20 + (2 - j2)\mathbf{I}_1 + j2\mathbf{I}_2 = 0$$

$$(1 - j)\mathbf{I}_1 + j\mathbf{I}_2 = -j10 \qquad (1)$$

For the supermesh,

$$(j - j2)\mathbf{I}_2 + j2\mathbf{I}_1 + 4\mathbf{I}_3 - j\mathbf{I}_4 = 0 \qquad (2)$$

Also,

$$\mathbf{I}_3 - \mathbf{I}_2 = 2\mathbf{I} = 2(\mathbf{I}_1 - \mathbf{I}_2)$$

$$\mathbf{I}_3 = 2\mathbf{I}_1 - \mathbf{I}_2 \qquad (3)$$

For mesh 4,

$$\mathbf{I}_4 = 5 \qquad (4)$$

Substituting (3) and (4) into (2),

$$(8 + j2)\mathbf{I}_1 - (-4 + j)\mathbf{I}_2 = j5 \qquad (5)$$

Putting (1) and (5) in matrix form,

$$\begin{bmatrix} 1 - j & j \\ 8 + j2 & 4 - j \end{bmatrix} \begin{bmatrix} \mathbf{I}_1 \\ \mathbf{I}_2 \end{bmatrix} = \begin{bmatrix} -j10 \\ j5 \end{bmatrix}$$

$$\Delta = -3 - j5, \qquad \Delta_1 = -5 + j40, \qquad \Delta_2 = -15 + j85$$

$$\mathbf{I} = \mathbf{I}_1 - \mathbf{I}_2 = \frac{\Delta_1 - \Delta_2}{\Delta} = \frac{10 - j45}{-3 - j5} = \underline{\mathbf{7.906\angle 43.49^\circ\ A}}$$

Chapter 10, Solution 34.

The circuit is shown below.

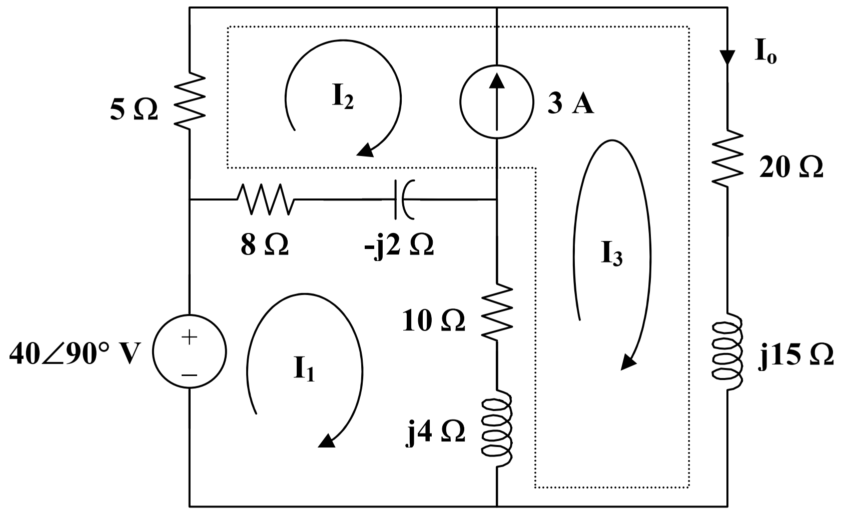

For mesh 1,

$$-j40 + (18 + j2)\mathbf{I}_1 - (8 - j2)\mathbf{I}_2 - (10 + j4)\mathbf{I}_3 = 0 \qquad (1)$$

For the supermesh,

$$(13 - j2)\mathbf{I}_2 + (30 + j19)\mathbf{I}_3 - (18 + j2)\mathbf{I}_1 = 0 \qquad (2)$$

Also,

$$\mathbf{I}_2 = \mathbf{I}_3 - 3 \qquad (3)$$

Adding (1) and (2) and incorporating (3),

$$-j40 + 5(\mathbf{I}_3 - 3) + (20 + j15)\mathbf{I}_3 = 0$$

$$\mathbf{I}_3 = \frac{3 + j8}{5 + j3} = 1.465\angle 38.48°$$

$$\mathbf{I}_o = \mathbf{I}_3 = \underline{\mathbf{1.465\angle 38.48°\ A}}$$

Chapter 10, Solution 35.

Consider the circuit shown below.

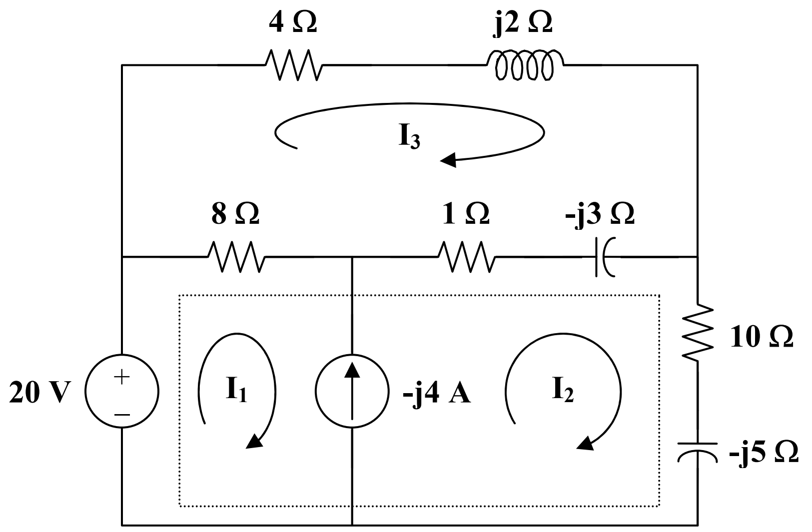

For the supermesh,

$$-20 + 8\mathbf{I}_1 + (11 - j8)\mathbf{I}_2 - (9 - j3)\mathbf{I}_3 = 0 \qquad (1)$$

Also,

$$\mathbf{I}_1 = \mathbf{I}_2 + j4 \qquad (2)$$

For mesh 3,

$$(13 - j)\mathbf{I}_3 - 8\mathbf{I}_1 - (1 - j3)\mathbf{I}_2 = 0 \qquad (3)$$

Substituting (2) into (1),

$$(19 - j8)\mathbf{I}_2 - (9 - j3)\mathbf{I}_3 = 20 - j32 \qquad (4)$$

Substituting (2) into (3),

$$-(9 - j3)\mathbf{I}_2 + (13 - j)\mathbf{I}_3 = j32 \qquad (5)$$

From (4) and (5),

$$\begin{bmatrix} 19 - j8 & -(9 - j3) \\ -(9 - j3) & 13 - j \end{bmatrix} \begin{bmatrix} \mathbf{I}_2 \\ \mathbf{I}_3 \end{bmatrix} = \begin{bmatrix} 20 - j32 \\ j32 \end{bmatrix}$$

$$\Delta = 167 - j69, \qquad \Delta_2 = 324 - j148$$

$$\mathbf{I}_2 = \frac{\Delta_2}{\Delta} = \frac{324 - j148}{167 - j69} = \frac{356.2\angle -24.55^\circ}{180.69\angle -22.45^\circ}$$

$\mathbf{I}_2 =$ **$\underline{1.971\angle -2.1^\circ \text{ A}}$**

Chapter 10, Solution 36.

Consider the circuit below.

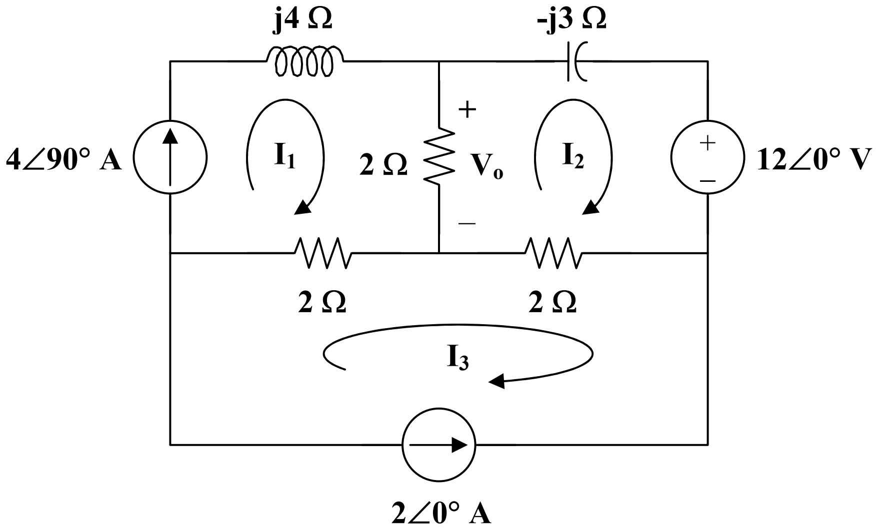

Clearly,

$$\mathbf{I}_1 = 4\angle 90° = j4 \qquad \text{and} \qquad \mathbf{I}_3 = -2$$

For mesh 2,

$$(4 - j3)\mathbf{I}_2 - 2\mathbf{I}_1 - 2\mathbf{I}_3 + 12 = 0$$
$$(4 - j3)\mathbf{I}_2 - j8 + 4 + 12 = 0$$
$$\mathbf{I}_2 = \frac{-16 + j8}{4 - j3} = -3.52 - j0.64$$

Thus,

$$\mathbf{V}_o = 2(\mathbf{I}_1 - \mathbf{I}_2) = (2)(3.52 + j4.64) = 7.04 + j9.28$$
$$\mathbf{V}_o = \underline{\mathbf{11.648\angle 52.82° \ V}}$$

Chapter 10, Solution 37.

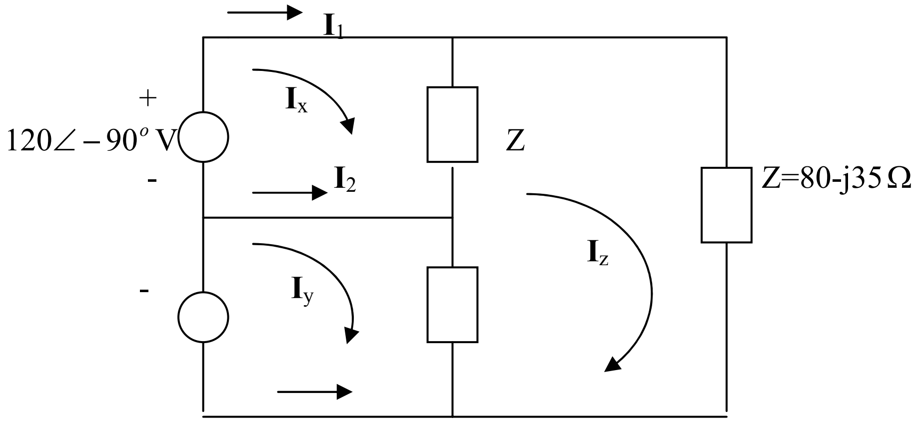

$120\angle -30^o$ V Z

\+ $\mathbf{I}_3$

For mesh x,

$$ZI_x - ZI_z = -j120 \quad (1)$$

For mesh y,

$$ZI_y - ZI_z = -120\angle 30^o = -103.92 + j60 \quad (2)$$

For mesh z,

$$-ZI_x - ZI_y + 3ZI_z = 0 \quad (3)$$

Putting (1) to (3) together leads to the following matrix equation:

$$\begin{pmatrix} (80-j35) & 0 & (-80+j35) \\ 0 & (80-j35) & (-80+j35) \\ (-80+j35) & (-80+j35) & (240-j105) \end{pmatrix} \begin{pmatrix} I_x \\ I_y \\ I_z \end{pmatrix} = \begin{pmatrix} -j120 \\ -103.92+j60 \\ 0 \end{pmatrix} \longrightarrow AI = B$$

Using MATLAB, we obtain

$$I = inv(A)*B = \begin{pmatrix} -1.9165 + j1.4115 \\ -2.1806 - j0.954 \\ -1.3657 + j0.1525 \end{pmatrix}$$

$$I_1 = I_x = -1.9165 + j1.4115 = \underline{2.3802\angle 143.6^o} \text{ A}$$
$$I_2 = I_y - I_x = -0.2641 - j2.3655 = \underline{2.3802\angle -96.37^o} \text{ A}$$
$$I_3 = -I_y = 2.1806 + j0.954 = \underline{2.3802\angle 23.63^o \text{ A}}$$

Chapter 10, Solution 38.

Consider the circuit below.

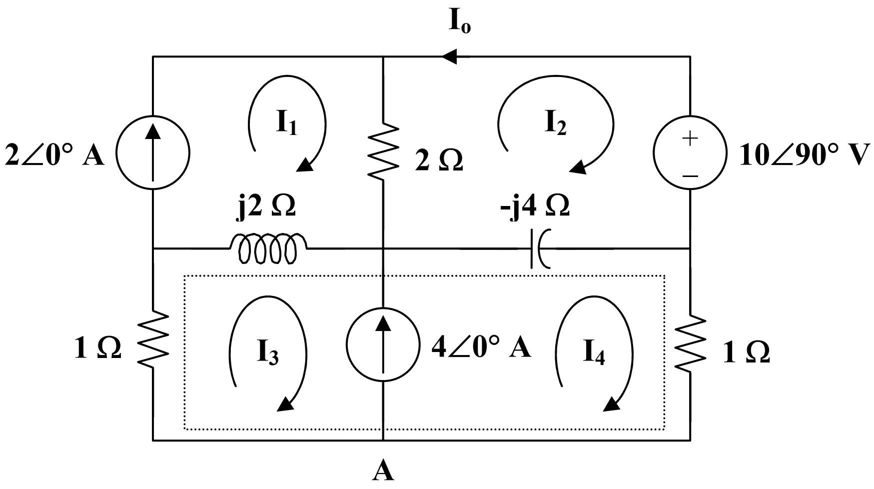

Clearly,

$$\mathbf{I}_1 = 2 \qquad (1)$$

For mesh 2,

$$(2 - j4)\mathbf{I}_2 - 2\mathbf{I}_1 + j4\mathbf{I}_4 + 10\angle 90° = 0 \qquad (2)$$

Substitute (1) into (2) to get

$$(1 - j2)\mathbf{I}_2 + j2\mathbf{I}_4 = 2 - j5$$

For the supermesh,

$$(1 + j2)\mathbf{I}_3 - j2\mathbf{I}_1 + (1 - j4)\mathbf{I}_4 + j4\mathbf{I}_2 = 0$$

$$j4\mathbf{I}_2 + (1 + j2)\mathbf{I}_3 + (1 - j4)\mathbf{I}_4 = j4 \qquad (3)$$

At node A,

$$\mathbf{I}_3 = \mathbf{I}_4 - 4 \qquad (4)$$

Substituting (4) into (3) gives

$$j2\mathbf{I}_2 + (1 - j)\mathbf{I}_4 = 2(1 + j3) \qquad (5)$$

From (2) and (5),

$$\begin{bmatrix} 1 - j2 & j2 \\ j2 & 1 - j \end{bmatrix} \begin{bmatrix} \mathbf{I}_2 \\ \mathbf{I}_4 \end{bmatrix} = \begin{bmatrix} 2 - j5 \\ 2 + j6 \end{bmatrix}$$

$$\Delta = 3 - j3, \qquad \Delta_1 = 9 - j11$$

$$\mathbf{I}_o = -\mathbf{I}_2 = \frac{-\Delta_1}{\Delta} = \frac{-(9 - j11)}{3 - j3} = \frac{1}{3}(-10 + j)$$

$$\mathbf{I}_o = \underline{\mathbf{3.35\angle 174.3° \ A}}$$

Chapter 10, Solution 39.

For mesh 1,

$$(28 - j15)I_1 - 8I_2 + j15I_3 = 12\angle 64^o \qquad (1)$$

For mesh 2,

$$-8I_1 + (8 - j9)I_2 - j16I_3 = 0 \qquad (2)$$

For mesh 3,

$$j15I_1 - j16I_2 + (10 + j)I_3 = 0 \qquad (3)$$

In matrix form, (1) to (3) can be cast as

$$\begin{pmatrix} (28 - j15) & -8 & j15 \\ -8 & (8 - j9) & -j16 \\ j15 & -j16 & (10 + j) \end{pmatrix} \begin{pmatrix} I_1 \\ I_2 \\ I_3 \end{pmatrix} = \begin{pmatrix} 12\angle 64^o \\ 0 \\ 0 \end{pmatrix} \quad \text{or} \quad AI = B$$

Using MATLAB,

I = inv(A)*B

$I_1 = -0.128 + j0.3593 = \underline{0.3814\angle 109.6^o \text{ A}}$

$I_2 = -0.1946 + j0.2841 = \underline{0.3443\angle 124.4^o \text{ A}}$

$I_3 = 0.0718 - j0.1265 = \underline{0.1455\angle -60.42^o \text{ A}}$

$$I_x = I_1 - I_2 = 0.0666 + j0.0752 = \underline{0.1005\angle 48.5^\circ \text{ A}}$$

Chapter 10, Solution 40.

Let $i_O = i_{O1} + i_{O2}$, where i_{O1} is due to the dc source and i_{O2} is due to the ac source. For i_{O1}, consider the circuit in Fig. (a).

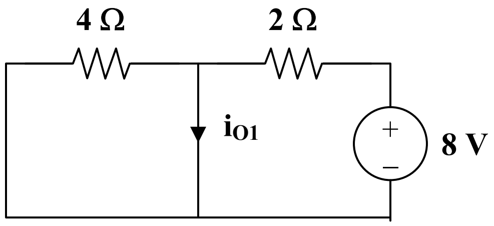

(a)

Clearly,

$$i_{O1} = 8/2 = 4 \text{ A}$$

For i_{O2}, consider the circuit in Fig. (b).

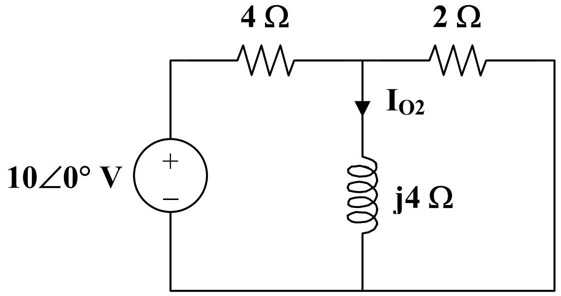

(b)

If we transform the voltage source, we have the circuit in Fig. (c), where $4 \parallel 2 = 4/3\,\Omega$.

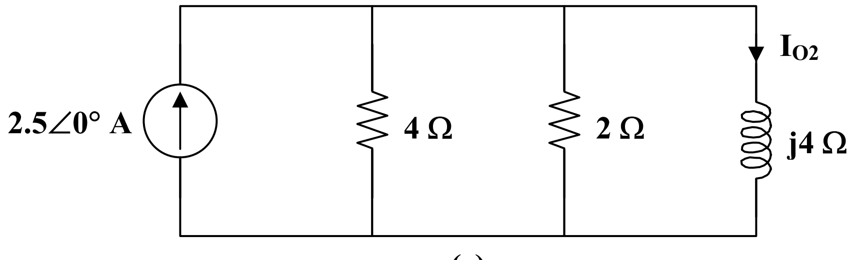

(c)

By the current division principle,

$$\mathbf{I}_{O2} = \frac{4/3}{4/3 + j4}(2.5\angle 0^\circ)$$

$$\mathbf{I}_{O2} = 0.25 - j0.75 = 0.79\angle -71.56^\circ$$

Thus, $\quad i_{O2} = 0.79\cos(4t - 71.56°)$ A

Therefore,

$$i_O = i_{O1} + i_{O2} = 4 + 0.79\cos(4t - 71.56°) \text{ A}$$

Chapter 10, Solution 41.

Let $v_x = v_1 + v_2$.

For v_1 we let the DC source equal zero.

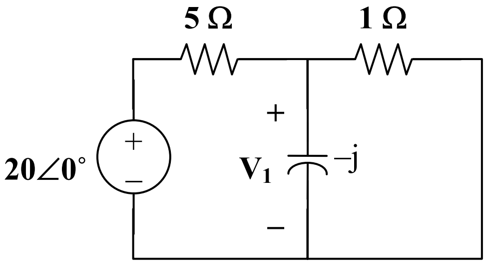

$$\frac{V_1 - 20}{5} + \frac{V_1}{-j} + \frac{V_1}{1} = 0 \text{ which simplifies to } (1j - 5 + 5j)V_1 = 100j$$

$V_1 = 2.56\angle{-39.8^\circ}$ or $v_1 = 2.56\sin(500t - 39.8^\circ)$ V

Setting the AC signal to zero produces:

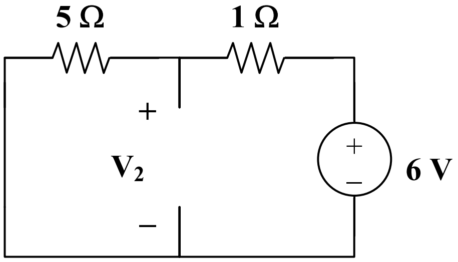

The 1-ohm resistor in series with the 5-ohm resistor creating a simple voltage divider yielding:

$v_2 = (5/6)6 = 5$ V.

$v_x =$ **$\underline{\{2.56\sin(500t - 39.8^\circ) + 5\}\text{ V.}}$**

Chapter 10, Solution 42.

Let $i_x = i_1 + i_2$, where i_1 and i_2 which are generated by i_s and v_s respectively. For i_1 we let $i_s = 6\sin 2t$ A becomes $I_s = 6\angle 0°$, where $\omega = 2$.

$$I_1 = \frac{2 - j4}{3 + j2 + 2 - j4} 6 = 12\frac{1 - j2}{5 - j2} = 3.724 - j3.31 = 4.983\angle -41.63°$$

$i_1 = 4.983\sin(2t - 41.63°)$ A

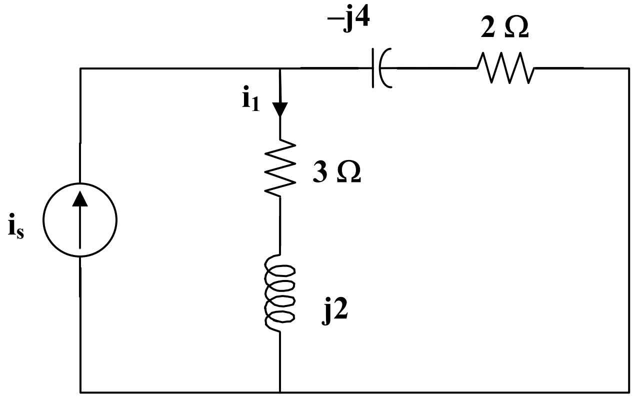

For i_2, we transform $v_s = 12\cos(4t - 30°)$ into the frequency domain and get $V_s = 12\angle -30°$.

Thus, $I_2 = \dfrac{12\angle -30°}{2 - j2 + 3 + j4} = 5.385\angle 8.2°$ or $i_2 = 5.385\cos(4t + 8.2°)$ A

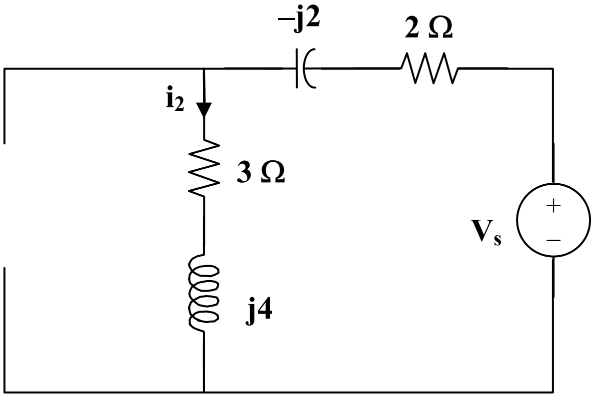

$i_x =$ **[5.385cos(4t + 8.2°) + 4.983sin(2t – 41.63°)] A**.

Chapter 10, Solution 43.

Let $i_O = i_{O1} + i_{O2}$, where i_{O1} is due to the dc source and i_{O2} is due to the ac source. For i_{O1}, consider the circuit in Fig. (a).

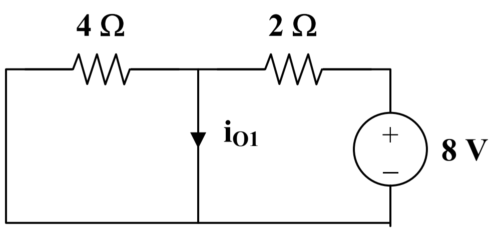

(a)

Clearly,

$$i_{O1} = 8/2 = 4 \text{ A}$$

For i_{O2}, consider the circuit in Fig. (b).

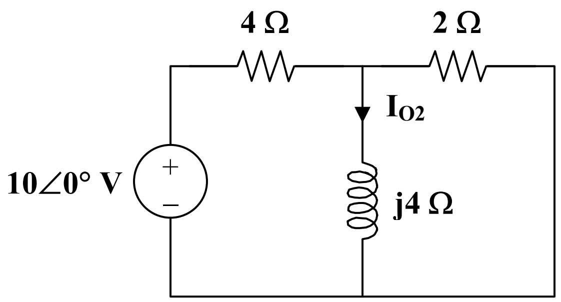

(b)

If we transform the voltage source, we have the circuit in Fig. (c), where $4 \parallel 2 = 4/3\,\Omega$.

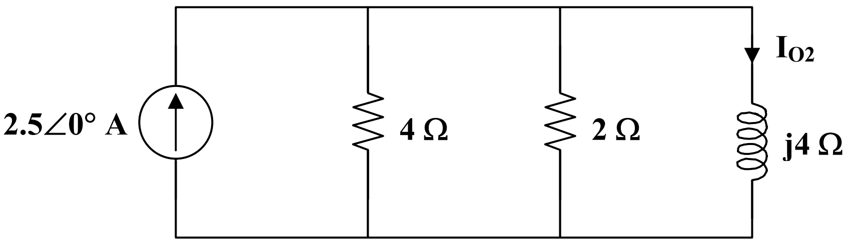

(c)

By the current division principle,

$$\mathbf{I}_{O2} = \frac{4/3}{4/3 + j4}(2.5\angle 0°)$$

$$\mathbf{I}_{O2} = 0.25 - j0.75 = 0.79\angle{-71.56°}$$

Thus, $\quad i_{O2} = 0.79\cos(4t - 71.56°) \text{ A}$

Therefore,

$$i_O = i_{O1} + i_{O2} = \underline{\mathbf{4 + 0.79\ cos\ (89)(4t - 71.56°)\ A}}$$

Chapter 10, Solution 44.

Let $v_x = v_1 + v_2$, where v_1 and v_2 are due to the current source and voltage source respectively.

For v_1, $\omega = 6$, $5\,H \longrightarrow j\omega L = j30$

The frequency-domain circuit is shown below.

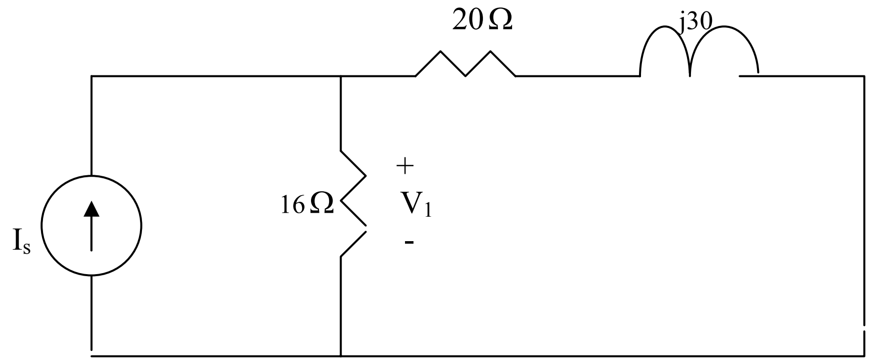

Let $Z = 16 // (20 + j30) = \dfrac{16(20 + j30)}{36 + j30} = 11.8 + j3.497 = 12.31\angle 16.5^o$

$V_1 = I_s Z = (12\angle 10^o)(12.31\angle 16.5^o) = 147.7\angle 26.5^o \longrightarrow v_1 = 147.7\cos(6t + 26.5^o)$ V

For v_2, $\omega = 2$, $5\,H \longrightarrow j\omega L = j10$

The frequency-domain circuit is shown below.

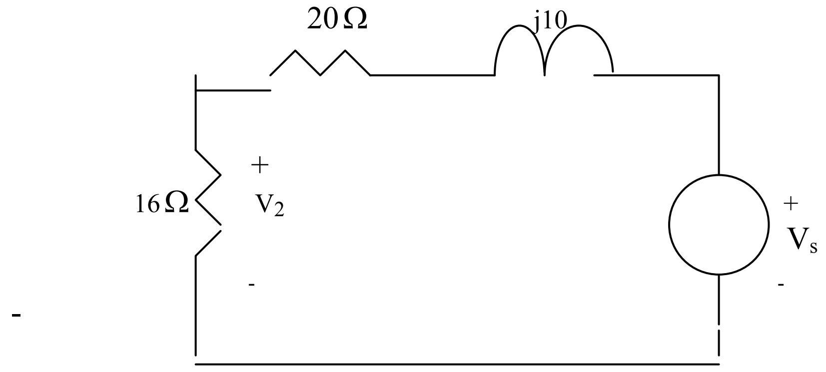

Using voltage division,

$$V_2 = \frac{16}{16+20+j10}V_s = \frac{16(50\angle 0^o)}{36+j10} = 21.41\angle -15.52^o \longrightarrow v_2 = 21.41\sin(2t-15.52^o)\text{ V}$$

Thus,

$$v_x = \underline{147.7\cos(6t+26.5^o) + 21.41\sin(2t-15.52^o)\text{ V}}$$

Chapter 10, Solution 45.

Let $\mathbf{I}_o = \mathbf{I}_1 + \mathbf{I}_2$, where $\mathbf{I}_1$ is due to the voltage source and $\mathbf{I}_2$ is due to the current source. For $\mathbf{I}_1$, consider the circuit in Fig. (a).

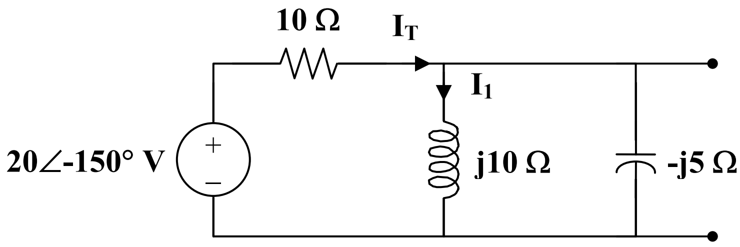

(a)

$$j10 \,||\, \text{-}j5 = \text{-}j10$$

$$\mathbf{I}_T = \frac{20\angle\text{-}150°}{10-j10} = \frac{2\angle\text{-}150°}{1-j}$$

Using current division,

$$\mathbf{I}_1 = \frac{\text{-}j5}{j10-j5}\mathbf{I}_T = \frac{\text{-}j5}{j5}\cdot\frac{2\angle\text{-}150°}{1-j} = \text{-}(1+j)\angle\text{-}150°$$

For $\mathbf{I}_2$, consider the circuit in Fig. (b).

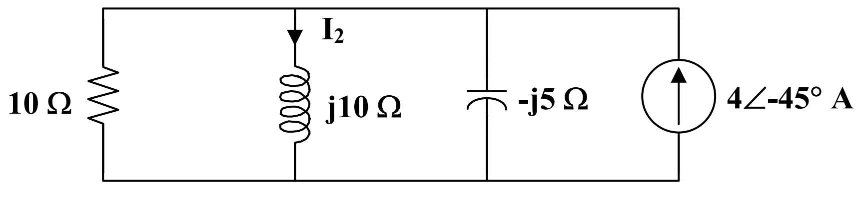

(b)

$$10 \,||\, \text{-}j5 = \frac{\text{-}j10}{2-j}$$

Using current division,

$$\mathbf{I}_2 = \frac{-j10/(2-j)}{-j10/(2-j)+j10}(4\angle -45°) = -2(1+j)\angle -45°$$

$$\mathbf{I}_o = \mathbf{I}_1 + \mathbf{I}_2 = -\sqrt{2}\angle -105° - 2\sqrt{2}\angle 0°$$

$$\mathbf{I}_o = -2.462 + j1.366 = 2.816\angle 150.98°$$

Therefore, $i_o =$ **<u>2.816 cos(10t + 150.98°) A</u>**

Chapter 10, Solution 46.

Let $v_o = v_1 + v_2 + v_3$, where v_1, v_2, and v_3 are respectively due to the 10-V dc source, the ac current source, and the ac voltage source. For v_1 consider the circuit in Fig. (a).

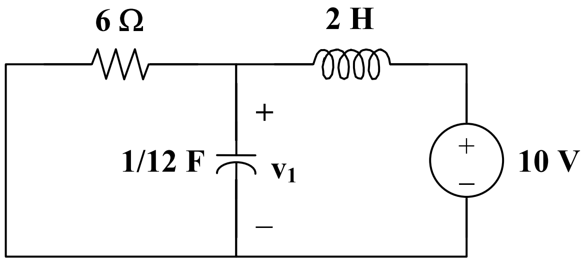

(a)

The capacitor is open to dc, while the inductor is a short circuit. Hence,

$$v_1 = 10 \text{ V}$$

For v_2, consider the circuit in Fig. (b).

$$\omega = 2$$

$$2 \text{ H} \longrightarrow j\omega L = j4$$

$$\frac{1}{12}\text{ F} \longrightarrow \frac{1}{j\omega C} = \frac{1}{j(2)(1/12)} = -j6$$

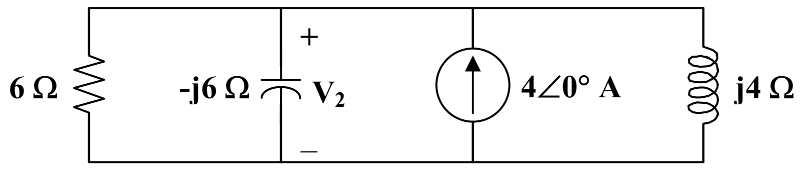

(b)

Applying nodal analysis,

$$4 = \frac{\mathbf{V}_2}{6} + \frac{\mathbf{V}_2}{-j6} + \frac{\mathbf{V}_2}{j4} = \left(\frac{1}{6} + \frac{j}{6} - \frac{j}{4}\right)\mathbf{V}_2$$

$$\mathbf{V}_2 = \frac{24}{1 - j0.5} = 21.45\angle 26.56°$$

Hence, $\quad v_2 = 21.45\sin(2t + 26.56°)$ V

For v_3, consider the circuit in Fig. (c).

$$\omega = 3$$

$$2\text{ H} \longrightarrow j\omega L = j6$$

$$\frac{1}{12}\text{F} \longrightarrow \frac{1}{j\omega C} = \frac{1}{j(3)(1/12)} = \text{-}j4$$

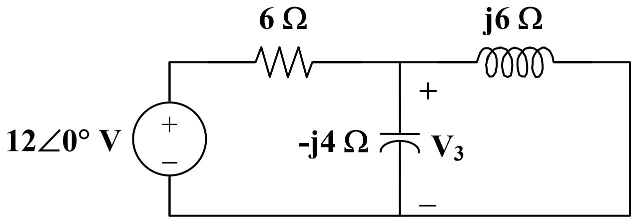

(c)

At the non-reference node,

$$\frac{12 - \mathbf{V}_3}{6} = \frac{\mathbf{V}_3}{\text{-}j4} + \frac{\mathbf{V}_3}{j6}$$

$$\mathbf{V}_3 = \frac{12}{1 + j0.5} = 10.73\angle\text{-}26.56°$$

Hence, $\quad v_3 = 10.73\cos(3t - 26.56°)$ V

Therefore, $\quad v_o =$ **<u>10 + 21.45 sin(2t + 26.56°) + 10.73 cos(3t – 26.56°) V</u>**

Chapter 10, Solution 47.

Let $i_o = i_1 + i_2 + i_3$, where i_1, i_2, and i_3 are respectively due to the 24-V dc source, the ac voltage source, and the ac current source. For i_1, consider the circuit in Fig. (a).

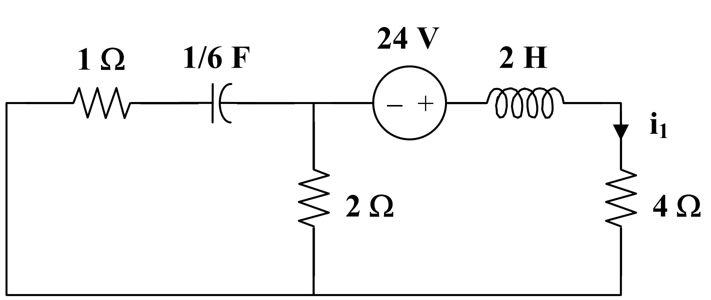

(a)

Since the capacitor is an open circuit to dc,

$$i_1 = \frac{24}{4+2} = 4 \text{ A}$$

For i_2, consider the circuit in Fig. (b).

$$\omega = 1$$
$$2 \text{ H} \longrightarrow j\omega L = j2$$
$$\frac{1}{6} \text{ F} \longrightarrow \frac{1}{j\omega C} = \text{-}j6$$

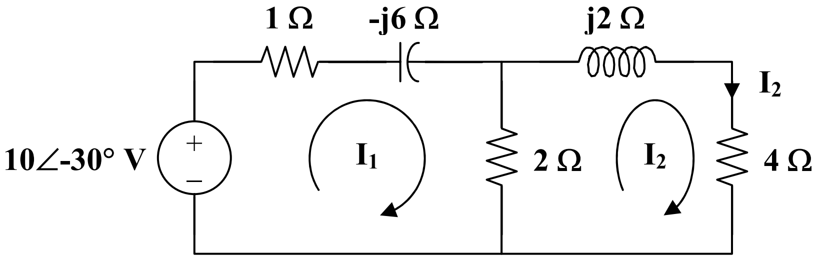

(b)

For mesh 1,

$$\text{-}10\angle\text{-}30° + (3 - j6)\mathbf{I}_1 - 2\mathbf{I}_2 = 0$$
$$10\angle\text{-}30° = 3(1 - 2j)\mathbf{I}_1 - 2\mathbf{I}_2$$
(1)

For mesh 2,

$$0 = \text{-}2\mathbf{I}_1 + (6 + j2)\mathbf{I}_2$$
$$\mathbf{I}_1 = (3 + j)\mathbf{I}_2$$
(2)

Substituting (2) into (1)

$$10\angle\text{-}30° = 13 - j15\mathbf{I}_2$$
$$\mathbf{I}_2 = 0.504\angle 19.1°$$

Hence, $i_2 = 0.504\sin(t + 19.1°)$ A

For i_3, consider the circuit in Fig. (c).

$$\omega = 3$$
$$2 \text{ H} \longrightarrow j\omega L = j6$$
$$\frac{1}{6} \text{ F} \longrightarrow \frac{1}{j\omega C} = \frac{1}{j(3)(1/6)} = \text{-}j2$$

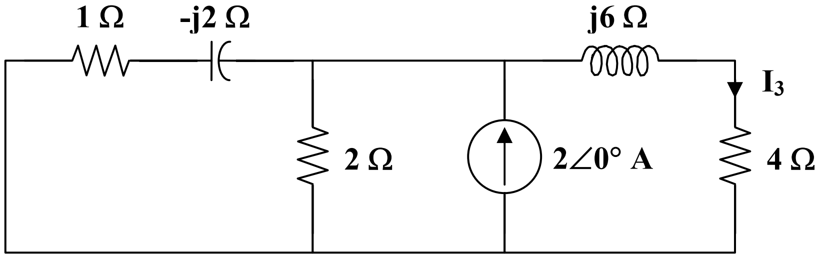

(c)

$$2 \,||\, (1 - j2) = \frac{2(1 - j2)}{3 - j2}$$

Using current division,

$$\mathbf{I}_3 = \frac{\frac{2(1 - j2)}{3 - j2} \cdot (2\angle 0°)}{4 + j6 + \frac{2(1 - j2)}{3 - j2}} = \frac{2(1 - j2)}{13 + j3}$$

$$\mathbf{I}_3 = 0.3352\angle\text{-}76.43°$$

Hence $\qquad i_3 = 0.3352\cos(3t - 76.43°)\text{ A}$

Therefore, $\qquad i_o = \underline{\mathbf{4 + 0.504\sin(t + 19.1°) + 0.3352\cos(3t - 76.43°)\text{ A}}}$

Chapter 10, Solution 48.

Let $i_O = i_{O1} + i_{O2} + i_{O3}$, where i_{O1} is due to the ac voltage source, i_{O2} is due to the dc voltage source, and i_{O3} is due to the ac current source. For i_{O1}, consider the circuit in Fig. (a).

$$\omega = 2000$$

$$50\cos(2000t) \longrightarrow 50\angle 0°$$

$$40\text{ mH} \longrightarrow j\omega L = j(2000)(40 \times 10^{-3}) = j80$$

$$20\ \mu\text{F} \longrightarrow \frac{1}{j\omega C} = \frac{1}{j(2000)(20 \times 10^{-6})} = \text{-}j25$$

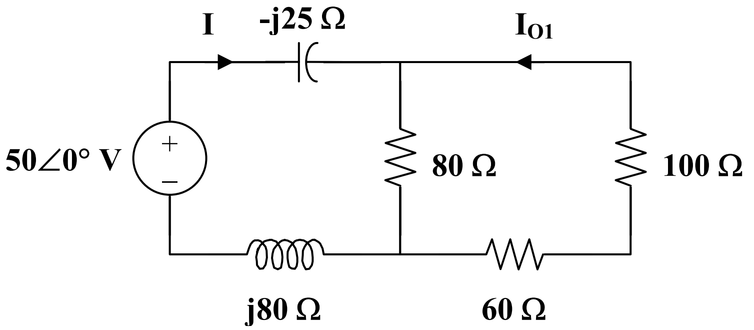

(a)

$$80 \,||\, (60 + 100) = 160/3$$

$$\mathbf{I} = \frac{50}{160/3 + j80 - j25} = \frac{30}{32 + j33}$$

Using current division,

$$\mathbf{I}_{O1} = \frac{-80\mathbf{I}}{80+160} = \frac{-1}{3}\mathbf{I} = \frac{10\angle 180°}{46\angle 45.9°}$$

$$\mathbf{I}_{O1} = 0.217\angle 134.1°$$

Hence, $\quad i_{O1} = 0.217\cos(2000t + 134.1°)$ A

For i_{O2}, consider the circuit in Fig. (b).

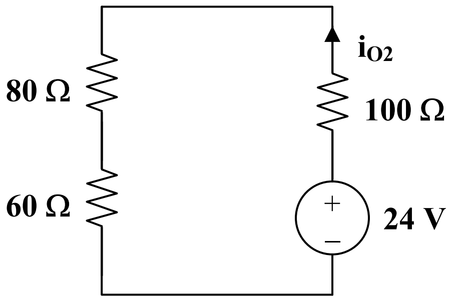

(b)

$$i_{O2} = \frac{24}{80+60+100} = 0.1\text{ A}$$

For i_{O3}, consider the circuit in Fig. (c).

$$\omega = 4000$$

$$2\cos(4000t) \longrightarrow 2\angle 0°$$

$$40\text{ mH} \longrightarrow j\omega L = j(4000)(40\times 10^{-3}) = j160$$

$$20\ \mu\text{F} \longrightarrow \frac{1}{j\omega C} = \frac{1}{j(4000)(20\times 10^{-6})} = -j12.5$$

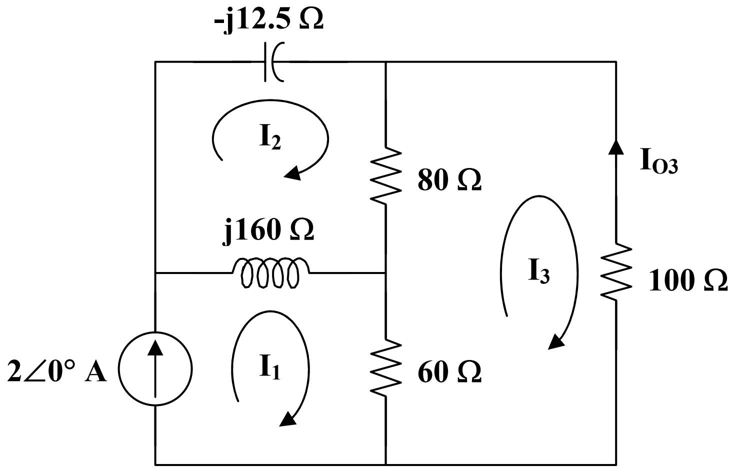

(c)

For mesh 1,

$$\mathbf{I}_1 = 2 \qquad (1)$$

For mesh 2,

$$(80 + j160 - j12.5)\mathbf{I}_2 - j160\mathbf{I}_1 - 80\mathbf{I}_3 = 0$$

Simplifying and substituting (1) into this equation yields

$$(8 + j14.75)\mathbf{I}_2 - 8\mathbf{I}_3 = j32 \qquad (2)$$

For mesh 3,

$$240\mathbf{I}_3 - 60\mathbf{I}_1 - 80\mathbf{I}_2 = 0$$

Simplifying and substituting (1) into this equation yields

$$\mathbf{I}_2 = 3\mathbf{I}_3 - 1.5 \qquad (3)$$

Substituting (3) into (2) yields

$$(16 + j44.25)\mathbf{I}_3 = 12 + j54.125$$

$$\mathbf{I}_3 = \frac{12 + j54.125}{16 + j44.25} = 1.1782\angle 7.38°$$

$$\mathbf{I}_{O3} = -\mathbf{I}_3 = -1.1782\angle 7.38°$$

Hence, $i_{O3} = -1.1782\sin(4000t + 7.38°)$ A

Therefore, $i_O =$ **0.1 + 0.217 cos(2000t + 134.1°) – 1.1782 sin(4000t + 7.38°) A**

Chapter 10, Solution 49.

$$8\sin(200t + 30°) \longrightarrow 8\angle 30°, \quad \omega = 200$$

$$5\text{ mH} \longrightarrow j\omega L = j(200)(5\times 10^{-3}) = j$$

$$1\text{ mF} \longrightarrow \frac{1}{j\omega C} = \frac{1}{j(200)(1\times 10^{-3})} = -j5$$

After transforming the current source, the circuit becomes that shown in the figure below.

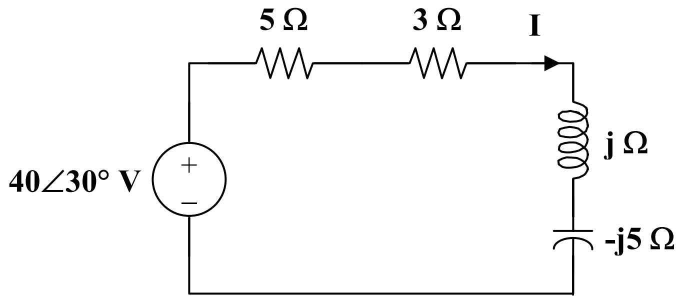

$$\mathbf{I} = \frac{40\angle 30°}{5 + 3 + j - j5} = \frac{40\angle 30°}{8 - j4} = 4.472\angle 56.56°$$

i = **4.472 sin(200t + 56.56°) A**

Chapter 10, Solution 50.

$$50\cos(10^5 t) \longrightarrow 50\angle 0°, \quad \omega = 10^5$$

$$0.4 \text{ mH} \longrightarrow j\omega L = j(10^5)(0.4\times 10^{-3}) = j40$$

$$0.2\ \mu\text{F} \longrightarrow \frac{1}{j\omega C} = \frac{1}{j(10^5)(0.2\times 10^{-6})} = -j50$$

After transforming the voltage source, we get the circuit in Fig. (a).

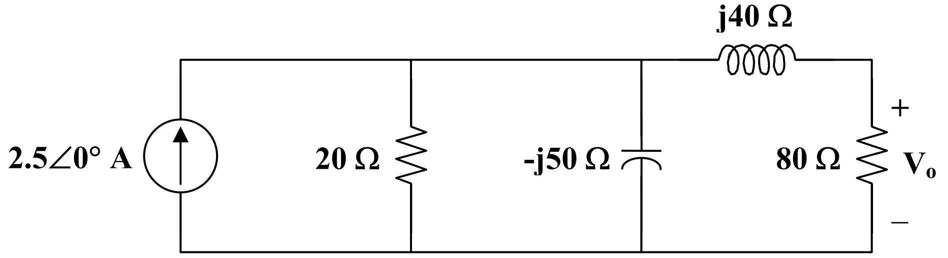

(a)

Let $\quad \mathbf{Z} = 20 \parallel -j50 = \dfrac{-j100}{2 - j5}$

and $\quad \mathbf{V}_s = (2.5\angle 0°)\mathbf{Z} = \dfrac{-j250}{2 - j5}$

With these, the current source is transformed to obtain the circuit in Fig.(b).

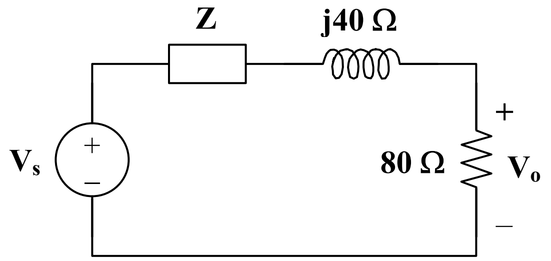

(b)

By voltage division,

$$\mathbf{V}_o = \frac{80}{\mathbf{Z} + 80 + j40}\mathbf{V}_s = \frac{80}{\frac{-j100}{2 - j5} + 80 + j40} \cdot \frac{-j250}{2 - j5}$$

$$\mathbf{V}_o = \frac{8(-j250)}{36 - j42} = 36.15\angle -40.6°$$

Therefore, $\quad v_o =$ **<u>36.15 cos(10^5 t – 40.6°) V</u>**

Chapter 10, Solution 51.

The original circuit with mesh currents and a node voltage labeled is shown below.

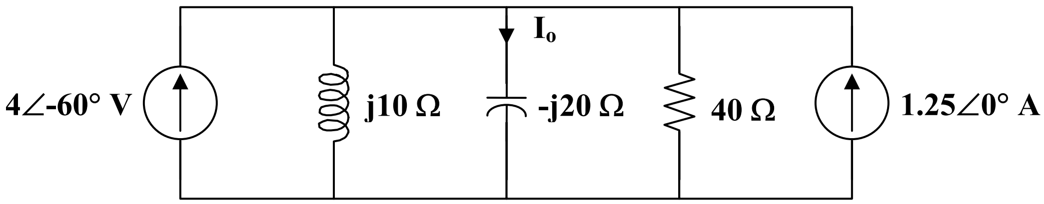

The following circuit is obtained by transforming the voltage sources.

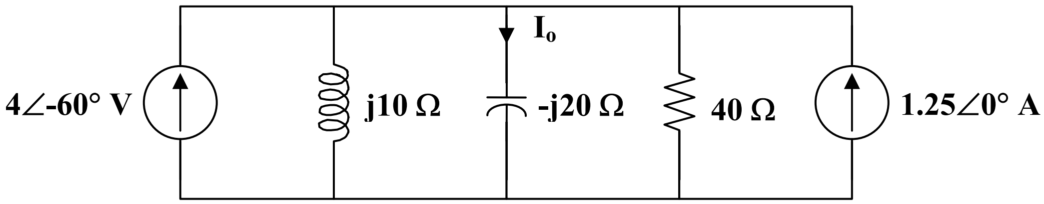

Use nodal analysis to find $\mathbf{V}_x$.

$$4\angle\text{-}60° + 1.25\angle 0° = \left(\frac{1}{j10} + \frac{1}{\text{-}j20} + \frac{1}{40}\right)\mathbf{V}_x$$

$$3.25 - j3.464 = (0.025 - j0.05)\,\mathbf{V}_x$$

$$\mathbf{V}_x = \frac{3.25 - j3.464}{0.025 - j0.05} = 81.42 + j24.29 = 84.97\angle 16.61°$$

Thus, from the original circuit,

$$\mathbf{I}_1 = \frac{40\angle 30° - \mathbf{V}_x}{j10} = \frac{(34.64 + j20) - (81.42 + j24.29)}{j10}$$

$$\mathbf{I}_1 = \frac{\text{-}46.78 - j4.29}{j10} = \text{-}0.429 + j4.678 = \underline{\mathbf{4.698\angle 95.24°\ A}}$$

$$\mathbf{I}_2 = \frac{\mathbf{V}_x - 50\angle 0°}{40} = \frac{31.42 + j24.29}{40}$$

$$\mathbf{I}_2 = 0.7855 + j0.6072 = 0.9928\angle 37.7° = \underline{\mathbf{0.9928\angle 37.7°\ A}}$$

Chapter 10, Solution 52.

We transform the voltage source to a current source.

$$\mathbf{I}_s = \frac{60\angle 0°}{2 + j4} = 6 - j12$$

The new circuit is shown in Fig. (a).

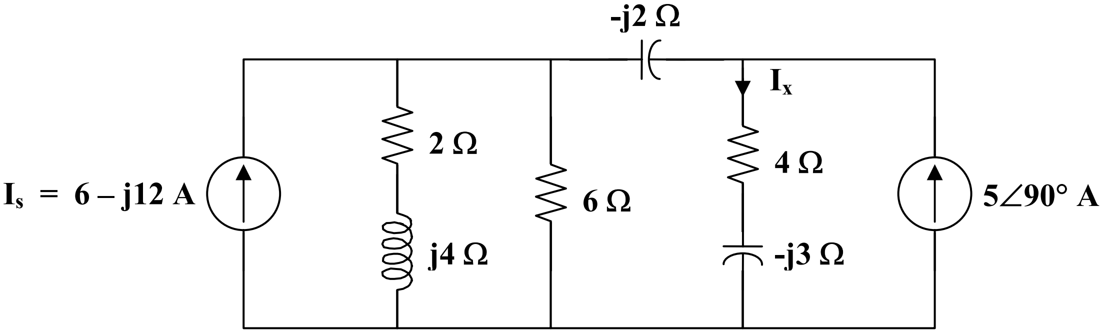

(a)

Let $$\mathbf{Z}_s = 6 \,||\, (2 + j4) = \frac{6(2 + j4)}{8 + j4} = 2.4 + j1.8$$

$$\mathbf{V}_s = \mathbf{I}_s \mathbf{Z}_s = (6 - j12)(2.4 + j1.8) = 36 - j18 = 18(2 - j)$$

With these, we transform the current source on the left hand side of the circuit to a voltage source. We obtain the circuit in Fig. (b).

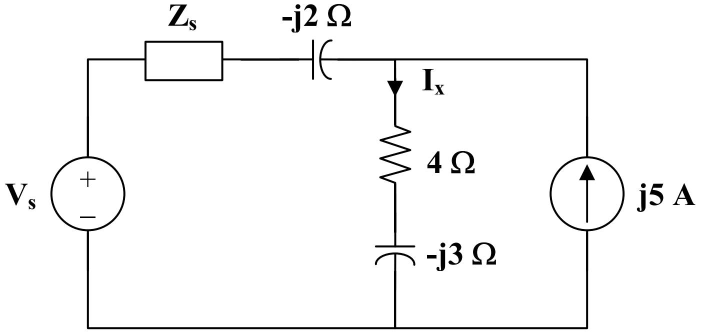

(b)

Let $$\mathbf{Z}_o = \mathbf{Z}_s - j2 = 2.4 - j0.2 = 0.2(12 - j)$$

$$\mathbf{I}_o = \frac{\mathbf{V}_s}{\mathbf{Z}_o} = \frac{18(2 - j)}{0.2(12 - j)} = 15.517 - j6.207$$

With these, we transform the voltage source in Fig. (b) to a current source. We obtain the circuit in Fig. (c).

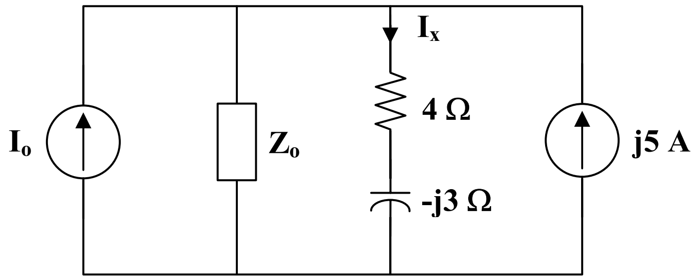

(c)

Using current division,

$$\mathbf{I}_x = \frac{\mathbf{Z}_o}{\mathbf{Z}_o + 4 - j3}(\mathbf{I}_o + j5) = \frac{2.4 - j0.2}{6.4 - j3.2}(15.517 - j1.207)$$

$$\mathbf{I}_x = 5 + j1.5625 = \underline{\mathbf{5.238\angle 17.35°\ A}}$$

Chapter 10, Solution 53.

We transform the voltage source to a current source to obtain the circuit in Fig. (a).

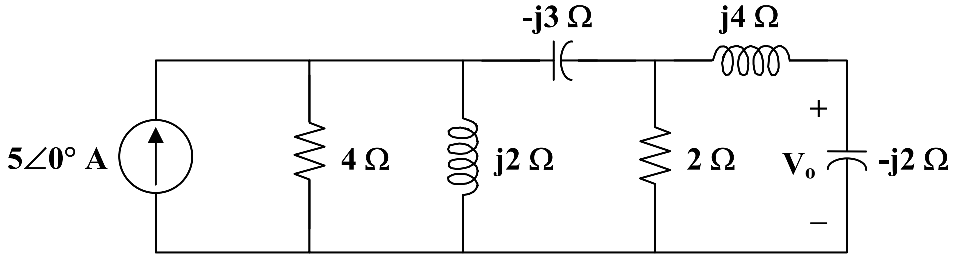

(a)

Let $$\mathbf{Z}_s = 4 \parallel j2 = \frac{j8}{4 + j2} = 0.8 + j1.6$$

$$\mathbf{V}_s = (5\angle 0°)\,\mathbf{Z}_s = (5)(0.8 + j1.6) = 4 + j8$$

With these, the current source is transformed so that the circuit becomes that shown in Fig. (b).

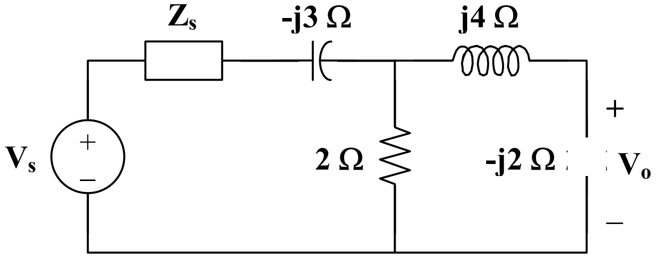

(b)

Let $$\mathbf{Z}_x = \mathbf{Z}_s - j3 = 0.8 - j1.4$$

$$\mathbf{I}_x = \frac{\mathbf{V}_s}{\mathbf{Z}_s} = \frac{4 + j8}{0.8 - j1.4} = -3.0769 + j4.6154$$

With these, we transform the voltage source in Fig. (b) to obtain the circuit in Fig. (c).

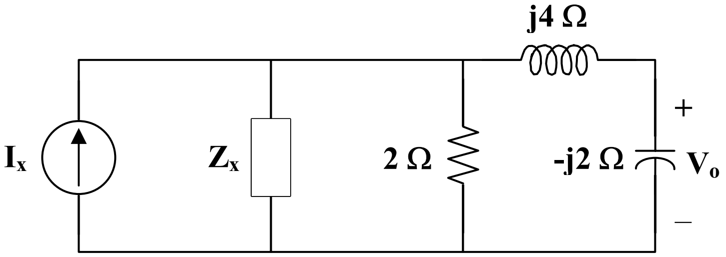

(c)

Let $$\mathbf{Z}_y = 2 \parallel \mathbf{Z}_x = \frac{1.6 - j2.8}{2.8 - j1.4} = 0.8571 - j0.5714$$

$$\mathbf{V}_y = \mathbf{I}_x \mathbf{Z}_y = (-3.0769 + j4.6154) \cdot (0.8571 - j0.5714) = j5.7143$$

With these, we transform the current source to obtain the circuit in Fig. (d).

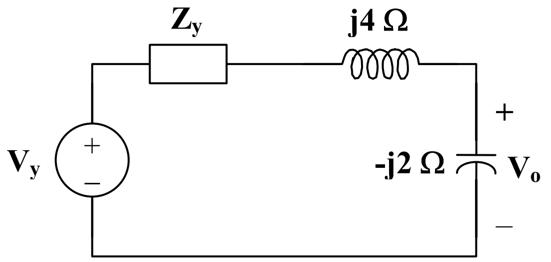

(d)

Using current division,

$$\mathbf{V}_o = \frac{-j2}{\mathbf{Z}_y + j4 - j2}\mathbf{V}_y = \frac{-j2(j5.7143)}{0.8571 - j0.5714 + j4 - j2} = \underline{\mathbf{(3.529 - j5.883)\ V}}$$

Chapter 10, Solution 54.

$$50//(-j30) = \frac{50x(-j30)}{50 - j30} = 13.24 - j22.059$$

We convert the current source to voltage source and obtain the circuit below.

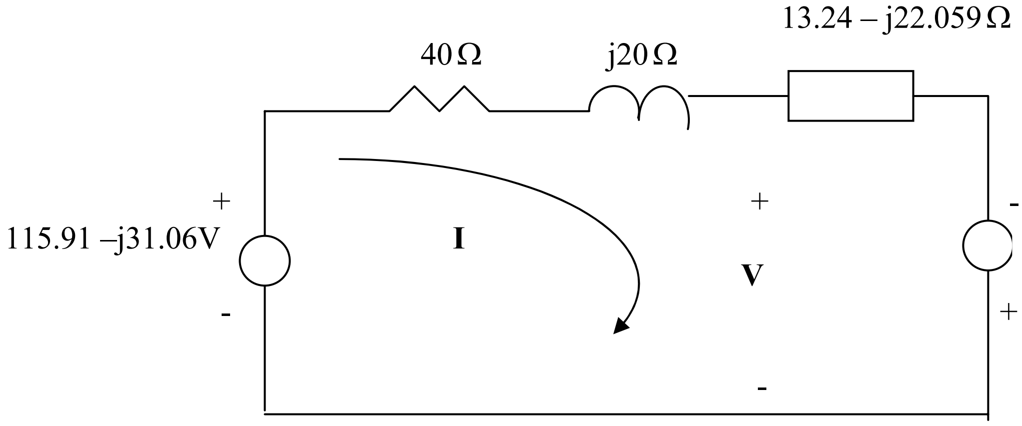

Applying KVL gives

-115.91 + j31.058 + (53.24-j2.059)I -134.95 + j74.912 = 0

or $$I = \frac{-250.86 + j105.97}{53.24 - j2.059} = -4.7817 + j1.8055$$

But $-V + (40 + j20)I + V = 0 \quad \longrightarrow \quad V = V_S - (40 + j20)I$

$$V = 115.91 - j31.05 - (40 + j20)(-4.7817 + j1.8055) = \underline{124.06\angle -154^o \text{ V}}$$

which agrees with the result in Prob. 10.7.

Chapter 10, Solution 55.

(a) To find $\mathbf{Z}_{th}$, consider the circuit in Fig. (a).

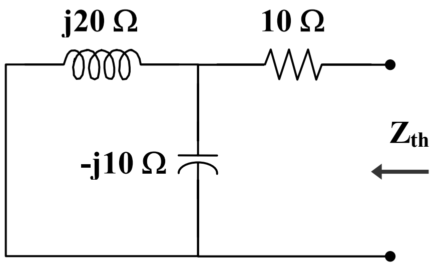

(a)

$$\mathbf{Z}_N = \mathbf{Z}_{th} = 10 + j20 \,||\, (-j10) = 10 + \frac{(j20)(-j10)}{j20 - j10}$$
$$= 10 - j20 = \underline{\mathbf{22.36\angle\text{-}63.43° \ \Omega}}$$

To find $\mathbf{V}_{th}$, consider the circuit in Fig. (b).

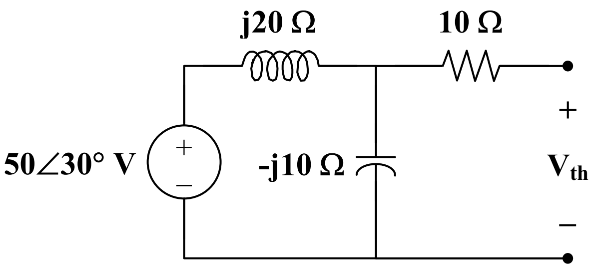

(b)

$$\mathbf{V}_{th} = \frac{-j10}{j20 - j10}(50\angle 30°) = \underline{\mathbf{-50\angle 30° \ V}}$$

$$\mathbf{I}_N = \frac{\mathbf{V}_{th}}{\mathbf{Z}_{th}} = \frac{-50\angle 30°}{22.36\angle -63.43°} = \underline{\mathbf{2.236\angle 273.4° \ A}}$$

(b) To find $\mathbf{Z}_{th}$, consider the circuit in Fig. (c).

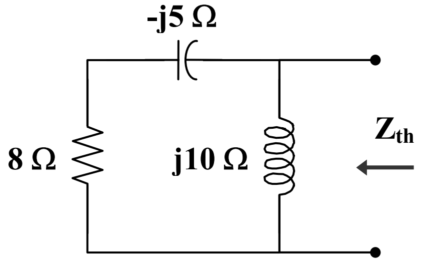

(c)

$$\mathbf{Z}_N = \mathbf{Z}_{th} = j10 \,||\, (8 - j5) = \frac{(j10)(8 - j5)}{j10 + 8 - j5} = \underline{\mathbf{10\angle 26^\circ\ \Omega}}$$

To obtain $\mathbf{V}_{th}$, consider the circuit in Fig. (d).

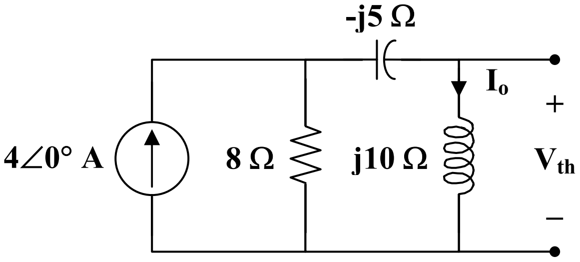

(d)

By current division,

$$\mathbf{I}_o = \frac{8}{8 + j10 - j5}(4\angle 0^\circ) = \frac{32}{8 + j5}$$

$$\mathbf{V}_{th} = j10\mathbf{I}_o = \frac{j320}{8 + j5} = \underline{\mathbf{33.92\angle 58^\circ\ V}}$$

$$\mathbf{I}_N = \frac{\mathbf{V}_{th}}{\mathbf{Z}_{th}} = \frac{33.92\angle 58^\circ}{10\angle 26^\circ} = \underline{\mathbf{3.392\angle 32^\circ\ A}}$$

Chapter 10, Solution 56.

(a) To find $\mathbf{Z}_{th}$, consider the circuit in Fig. (a).

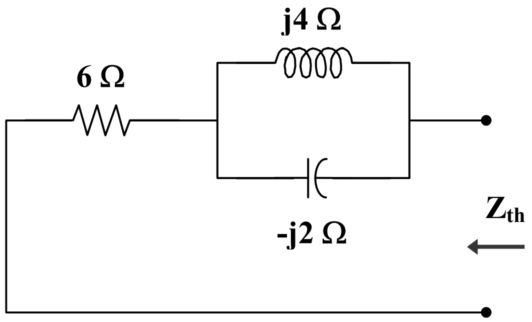

(a)

$$\mathbf{Z}_N = \mathbf{Z}_{th} = 6 + j4 \,||\, (-j2) = 6 + \frac{(j4)(-j2)}{j4 - j2} = 6 - j4$$

$$= \underline{\mathbf{7.211\angle\text{-}33.69^\circ\ \Omega}}$$

By placing short circuit at terminals a-b, we obtain,
$\mathbf{I}_N = \underline{\mathbf{2\angle 0^\circ\ A}}$

$$\mathbf{V}_{th} = \mathbf{Z}_{th}\,\mathbf{I}_{th} = (7.211\angle -33.69^\circ)(2\angle 0^\circ) = \underline{\mathbf{14.422\angle\text{-}33.69^\circ\ V}}$$

(b) To find $\mathbf{Z}_{th}$, consider the circuit in Fig. (b).

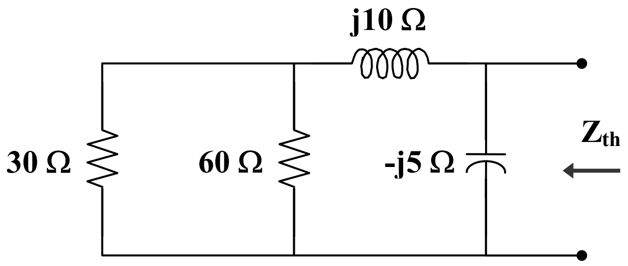

(b)

$$30 \,||\, 60 = 20$$

$$\mathbf{Z}_N = \mathbf{Z}_{th} = -j5 \,||\, (20 + j10) = \frac{(-j5)(20 + j10)}{20 + j5}$$

$$= \underline{\mathbf{5.423\angle\text{-}77.47^\circ\ \Omega}}$$

To find $\mathbf{V}_{th}$ and $\mathbf{I}_N$, we transform the voltage source and combine the 30 Ω and 60 Ω resistors. The result is shown in Fig. (c).

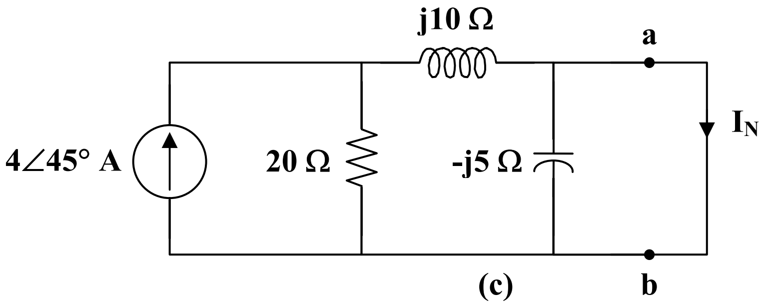

(c)

$$\mathbf{I}_N = \frac{20}{20 + j10}(4\angle 45°) = \frac{2}{5}(2 - j)(4\angle 45°)$$
$$= \underline{\mathbf{3.578\angle 18.43° \ A}}$$

$$\mathbf{V}_{th} = \mathbf{Z}_{th}\,\mathbf{I}_N = (5.423\angle -77.47°)(3.578\angle 18.43°)$$
$$= \underline{\mathbf{19.4\angle -59° \ V}}$$

Chapter 10, Solution 57.

To find $\mathbf{Z}_{th}$, consider the circuit in Fig. (a).

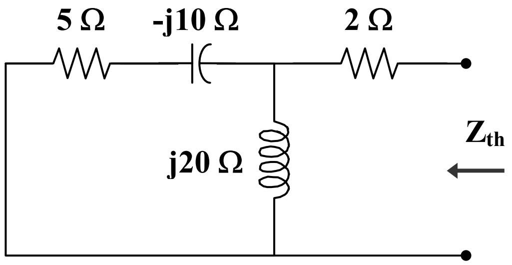

(a)

$$\mathbf{Z}_N = \mathbf{Z}_{th} = 2 + j20 \,\|\, (5 - j10) = 2 + \frac{(j20)(5 - j10)}{5 + j10}$$
$$= 18 - j12 = \underline{\mathbf{21.633\angle -33.7° \ \Omega}}$$

To find $\mathbf{V}_{th}$, consider the circuit in Fig. (b).

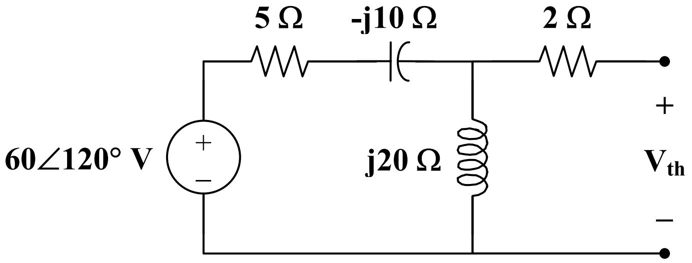

(b)

$$\mathbf{V}_{th} = \frac{j20}{5 - j10 + j20}(60\angle 120°) = \frac{j4}{1 + j2}(60\angle 120°)$$
$$= \underline{\mathbf{107.3\angle 146.56° \ V}}$$

$$\mathbf{I}_N = \frac{\mathbf{V}_{th}}{\mathbf{Z}_{th}} = \frac{107.3\angle 146.56°}{21.633\angle -33.7°} = \underline{\mathbf{4.961\angle -179.7° \ A}}$$

Chapter 10, Solution 58.

Consider the circuit in Fig. (a) to find $\mathbf{Z}_{th}$.

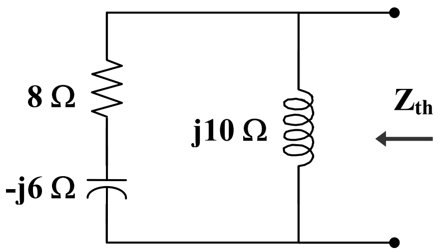

(a)

$$\mathbf{Z}_{th} = j10 \parallel (8 - j6) = \frac{(j10)(8 - j6)}{8 + j4} = 5(2 + j)$$
$$= \underline{\mathbf{11.18\angle 26.56° \ \Omega}}$$

Consider the circuit in Fig. (b) to find $\mathbf{V}_{th}$.

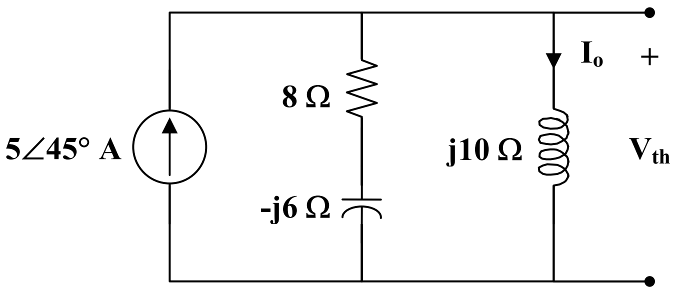

(b)

$$\mathbf{I}_o = \frac{8 - j6}{8 - j6 + j10}(5\angle 45°) = \frac{4 - j3}{4 + j2}(5\angle 45°)$$

$$\mathbf{V}_{th} = j10\,\mathbf{I}_o = \frac{(j10)(4 - j3)(5\angle 45°)}{(2)(2 + j)} = \underline{\mathbf{55.9\angle 71.56° \ V}}$$

Chapter 10, Solution 59.

The frequency-domain equivalent circuit is shown in Fig. (a). Our goal is to find $\mathbf{V}_{th}$ and $\mathbf{Z}_{th}$ across the terminals of the capacitor as shown in Figs. (b) and (c).

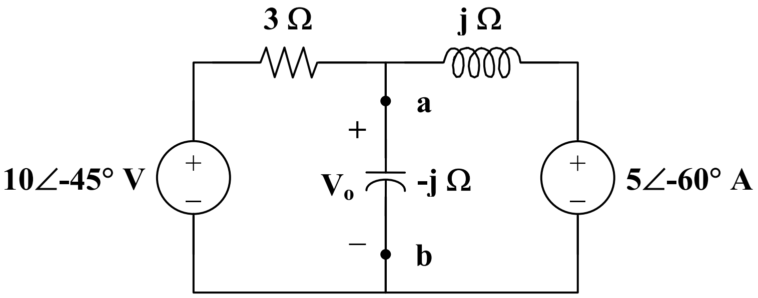

(a)

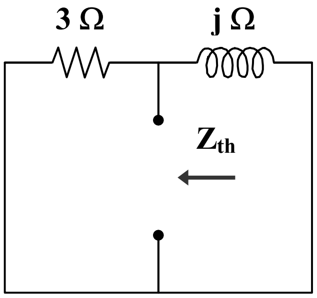

(b)

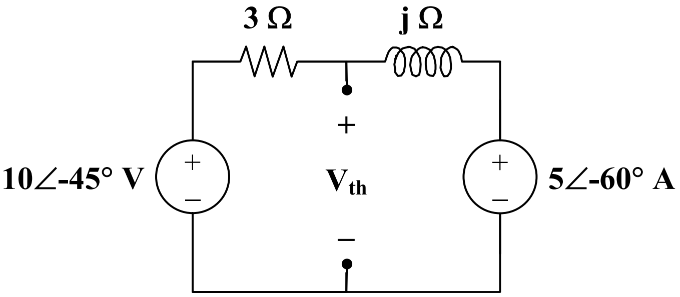

(c)

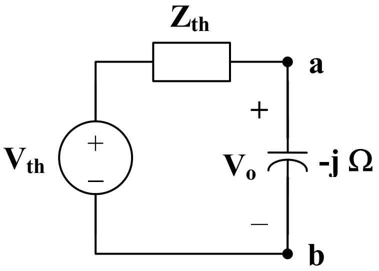

(d)

From Fig. (b),

$$\mathbf{Z}_{th} = 3 \parallel j = \frac{j3}{3+j} = \frac{3}{10}(1+j3)$$

From Fig.(c),

$$\frac{10\angle\text{-}45° - \mathbf{V}_{th}}{3} + \frac{5\angle\text{-}60° - \mathbf{V}_{th}}{j} = 0$$

$$\mathbf{V}_{th} = \frac{10\angle\text{-}45° - 15\angle 30°}{1 - j3}$$

From Fig. (d),

$$\mathbf{V}_o = \frac{-j}{\mathbf{Z}_{th} - j}\mathbf{V}_{th} = 10\angle -45° - 15\angle 30°$$

$$\mathbf{V}_o = 15.73\angle 247.9° \text{ V}$$

Therefore, $\quad v_o = \underline{\mathbf{15.73\ cos(t + 247.9°)\ V}}$

Chapter 10, Solution 60.

(a) To find $\mathbf{Z}_{th}$, consider the circuit in Fig. (a).

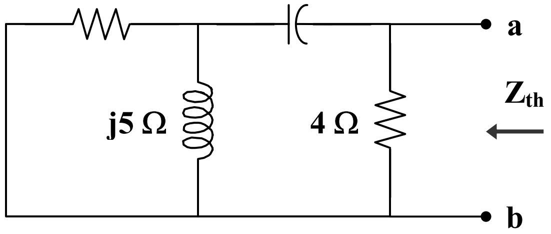

(a)

$$\mathbf{Z}_{th} = 4 \,||\, (-j4 + 10 \,||\, j5) = 4 \,||\, (-j4 + 2 + j4)$$

$$\mathbf{Z}_{th} = 4 \,||\, 2 = \underline{\mathbf{1.333\ \Omega}}$$

To find $\mathbf{V}_{th}$, consider the circuit in Fig. (b).

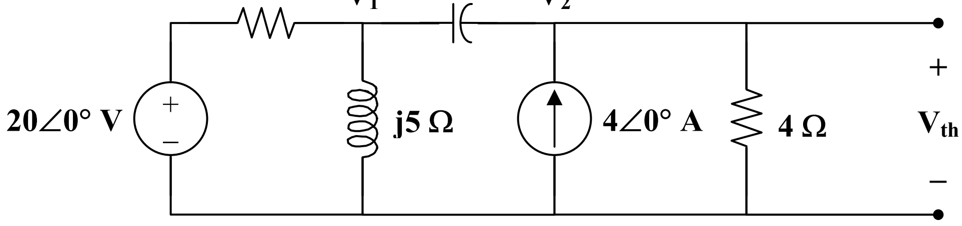

(b)

At node 1,

$$\frac{20 - \mathbf{V}_1}{10} = \frac{\mathbf{V}_1}{j5} + \frac{\mathbf{V}_1 - \mathbf{V}_2}{-j4}$$

$$(1 + j0.5)\mathbf{V}_1 - j2.5\mathbf{V}_2 = 20 \qquad (1)$$

At node 2,

$$4 + \frac{\mathbf{V}_1 - \mathbf{V}_2}{-j4} = \frac{\mathbf{V}_2}{4}$$

$$\mathbf{V}_1 = (1 - j)\mathbf{V}_2 + j16 \qquad (2)$$

Substituting (2) into (1) leads to

$$28 - j16 = (1.5 - j3)\mathbf{V}_2$$

$$\mathbf{V}_2 = \frac{28 - j16}{1.5 - j3} = 8 + j5.333$$

Therefore,

$$\mathbf{V}_{th} = \mathbf{V}_2 = \underline{\mathbf{9.615\angle 33.69^\circ\ V}}$$

(b) To find $\mathbf{Z}_{th}$, consider the circuit in Fig. (c).

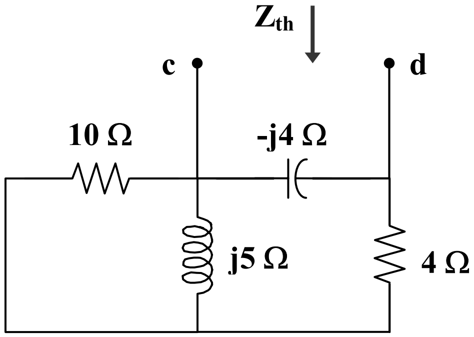

(c)

$$\mathbf{Z}_{th} = -j4 \,||\, (4 + 10 \,||\, j5) = -j4 \,||\left(4 + \frac{j10}{2 + j}\right)$$

$$\mathbf{Z}_{th} = -j4 \,||\, (6 + j4) = \frac{-j4}{6}(6 + j4) = \underline{\mathbf{2.667 - j4\ \Omega}}$$

To find $\mathbf{V}_{th}$,we will make use of the result in part (a).

$$\mathbf{V}_2 = 8 + j5.333 = (8/3)(3 + j2)$$

$$\mathbf{V}_1 = (1 - j)\mathbf{V}_2 + j16 = j16 + (8/3)(5 - j)$$

$$\mathbf{V}_{th} = \mathbf{V}_1 - \mathbf{V}_2 = 16/3 + j8 = \underline{\mathbf{9.614\angle 56.31^\circ\ V}}$$

Chapter 10, Solution 61.

First, we need to find $\mathbf{V}_{th}$ and $\mathbf{Z}_{th}$ across the 1 Ω resistor.

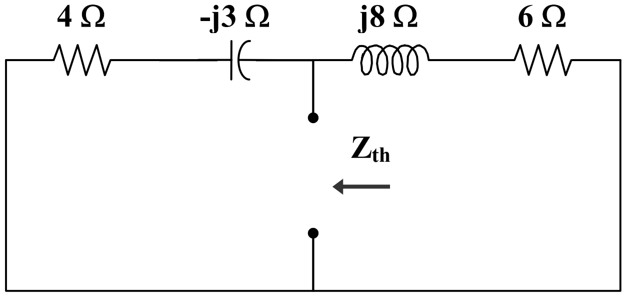

(a)

From Fig. (a),

$$\mathbf{Z}_{th} = (4 - j3) \,||\, (6 + j8) = \frac{(4 - j3)(6 + j8)}{10 + j5} = 4.4 - j0.8$$

$$\mathbf{Z}_{th} = \underline{\mathbf{4.472\angle\text{-}10.3°\ \Omega}}$$

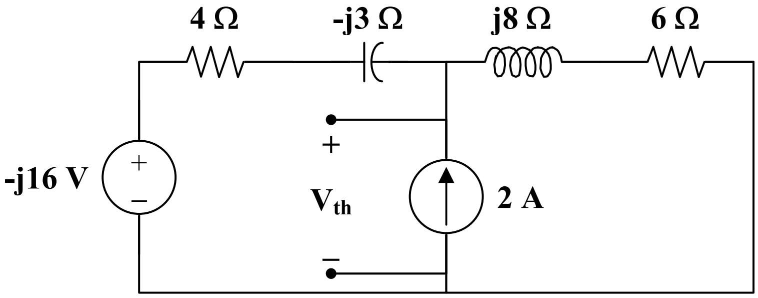

(b)

From Fig. (b),

$$\frac{-j16 - \mathbf{V}_{th}}{4 - j3} + 2 = \frac{\mathbf{V}_{th}}{6 + j8}$$

$$\mathbf{V}_{th} = \frac{3.92 - j2.56}{0.22 + j0.4} = 20.93\angle -43.45°$$

$$\mathbf{V}_o = \frac{\mathbf{V}_{th}}{1 + \mathbf{Z}_{th}} = \frac{20.93\angle -43.45°}{5.46\angle -8.43°}$$

$$\mathbf{V}_o = 3.835\angle -35.02°$$

Therefore, v_o = **<u>3.835 cos(4t – 35.02°) V</u>**

Chapter 10, Solution 62.

First, we transform the circuit to the frequency domain.

$$12\cos(t) \longrightarrow 12\angle 0°, \quad \omega = 1$$

$$2\text{ H} \longrightarrow j\omega L = j2$$

$$\frac{1}{4}\text{ F} \longrightarrow \frac{1}{j\omega C} = \text{-}j4$$

$$\frac{1}{8}\text{ F} \longrightarrow \frac{1}{j\omega C} = \text{-}j8$$

To find $\mathbf{Z}_{th}$, consider the circuit in Fig. (a).

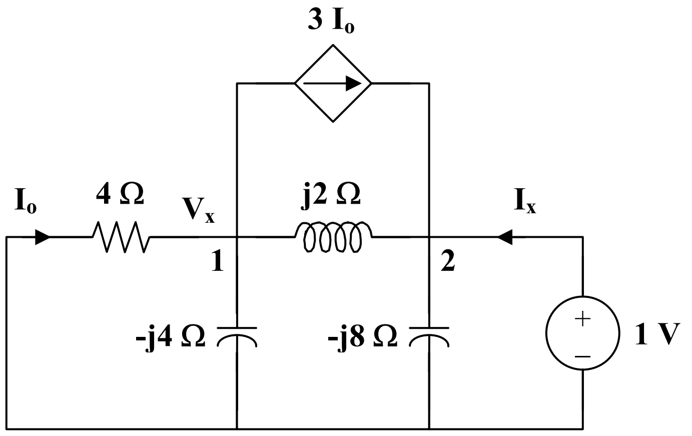

(a)

At node 1,

$$\frac{\mathbf{V}_x}{4} + \frac{\mathbf{V}_x}{\text{-}j4} + 3\mathbf{I}_o = \frac{1 - \mathbf{V}_x}{j2}, \qquad \text{where } \mathbf{I}_o = \frac{\text{-}\mathbf{V}_x}{4}$$

Thus,

$$\frac{\mathbf{V}_x}{\text{-}j4} - \frac{2\mathbf{V}_x}{4} = \frac{1 - \mathbf{V}_x}{j2}$$

$$\mathbf{V}_x = 0.4 + j0.8$$

At node 2,

$$\mathbf{I}_x + 3\mathbf{I}_o = \frac{1}{\text{-}j8} + \frac{1 - \mathbf{V}_x}{j2}$$

$$\mathbf{I}_x = (0.75 + j0.5)\,\mathbf{V}_x - j\frac{3}{8}$$

$$\mathbf{I}_x = \text{-}0.1 + j0.425$$

$$\mathbf{Z}_{th} = \frac{1}{\mathbf{I}_x} = \text{-}0.5246 - j2.229 = 2.29\angle\text{-}103.24°\,\Omega$$

To find $\mathbf{V}_{th}$, consider the circuit in Fig. (b).

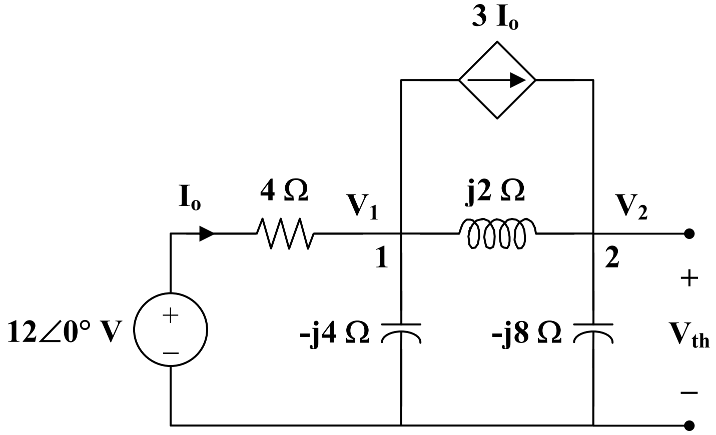

(b)

At node 1,

$$\frac{12-\mathbf{V}_1}{4} = 3\mathbf{I}_o + \frac{\mathbf{V}_1}{-j4} + \frac{\mathbf{V}_1-\mathbf{V}_2}{j2}, \qquad \text{where } \mathbf{I}_o = \frac{12-\mathbf{V}_1}{4}$$

$$24 = (2+j)\mathbf{V}_1 - j2\mathbf{V}_2 \qquad (1)$$

At node 2,

$$\frac{\mathbf{V}_1-\mathbf{V}_2}{j2} + 3\mathbf{I}_o = \frac{\mathbf{V}_2}{-j8}$$

$$72 = (6+j4)\mathbf{V}_1 - j3\mathbf{V}_2 \qquad (2)$$

From (1) and (2),

$$\begin{bmatrix} 24 \\ 72 \end{bmatrix} = \begin{bmatrix} 2+j & -j2 \\ 6+j4 & -j3 \end{bmatrix} \begin{bmatrix} \mathbf{V}_1 \\ \mathbf{V}_2 \end{bmatrix}$$

$$\Delta = -5 + j6, \qquad \Delta_2 = -j24$$

$$\mathbf{V}_{th} = \mathbf{V}_2 = \frac{\Delta_2}{\Delta} = 3.073\angle -219.8°$$

Thus,

$$\mathbf{V}_o = \frac{2}{2+\mathbf{Z}_{th}}\mathbf{V}_{th} = \frac{(2)(3.073\angle -219.8°)}{1.4754 - j2.229}$$

$$\mathbf{V}_o = \frac{6.146\angle -219.8°}{2.673\angle -56.5°} = 2.3\angle -163.3°$$

Therefore, $v_o =$ **2.3 cos(t – 163.3°) V**

Chapter 10, Solution 63.

Transform the circuit to the frequency domain.

$$4\cos(200t + 30°) \longrightarrow 4\angle 30°, \quad \omega = 200$$
$$10\text{ H} \longrightarrow j\omega L = j(200)(10) = j2\text{ k}\Omega$$
$$5\ \mu\text{F} \longrightarrow \frac{1}{j\omega C} = \frac{1}{j(200)(5\times 10^{-6})} = -j\text{ k}\Omega$$

$\mathbf{Z}_N$ is found using the circuit in Fig. (a).

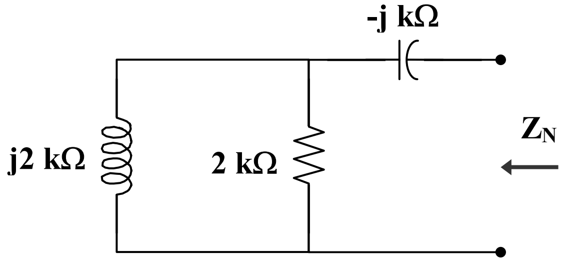

(a)

$$\mathbf{Z}_N = -j + 2 \,||\, j2 = -j + 1 + j = 1\text{ k}\Omega$$

We find $\mathbf{I}_N$ using the circuit in Fig. (b).

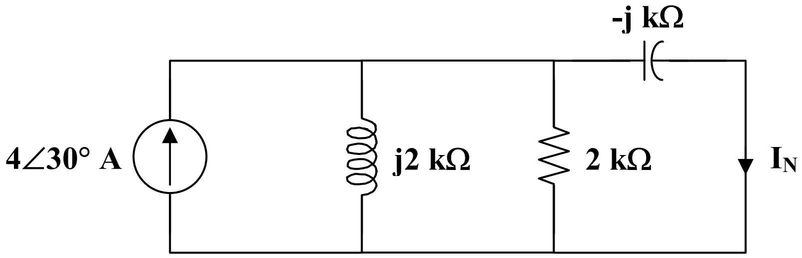

(b)

$$j2 \,||\, 2 = 1 + j$$

By the current division principle,

$$\mathbf{I}_N = \frac{1+j}{1+j-j}(4\angle 30°) = 5.657\angle 75°$$

Therefore,

i_N = <u>**5.657 cos(200t + 75°) A**</u>

$\mathbf{Z}_N$ = <u>**1 kΩ**</u>

Chapter 10, Solution 64.

$\mathbf{Z}_N$ is obtained from the circuit in Fig. (a).

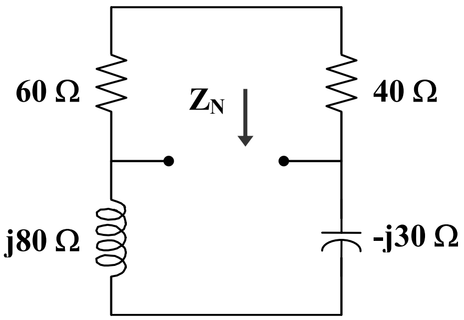

(a)

$$\mathbf{Z}_N = (60+40) \,||\, (j80 - j30) = 100 \,||\, j50 = \frac{(100)(j50)}{100 + j50}$$

$$\mathbf{Z}_N = 20 + j40 = \underline{\mathbf{44.72\angle 63.43^\circ \ \Omega}}$$

To find $\mathbf{I}_N$, consider the circuit in Fig. (b).

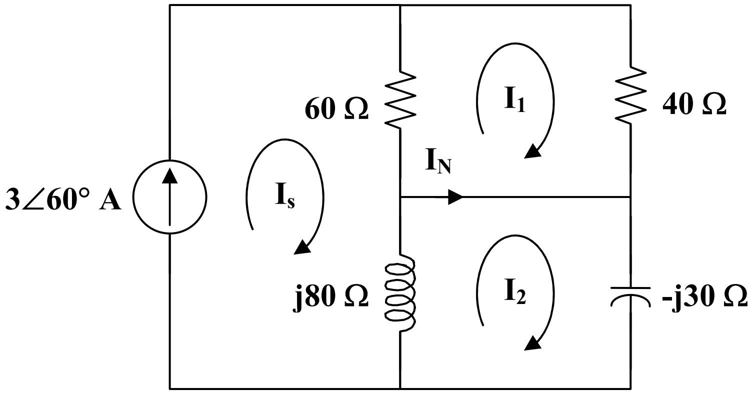

(b)

$$\mathbf{I}_s = 3\angle 60^\circ$$

For mesh 1,

$$100\mathbf{I}_1 - 60\mathbf{I}_s = 0$$

$$\mathbf{I}_1 = 1.8\angle 60^\circ$$

For mesh 2,

$$(j80 - j30)\mathbf{I}_2 - j80\mathbf{I}_s = 0$$

$$\mathbf{I}_2 = 4.8\angle 60^\circ$$

$$\mathbf{I}_N = \mathbf{I}_1 - \mathbf{I}_2 = \underline{\mathbf{3\angle 60^\circ \ A}}$$

Chapter 10, Solution 65.

$$5\cos(2t) \longrightarrow 5\angle 0°, \quad \omega = 2$$

$$4\text{ H} \longrightarrow j\omega L = j(2)(4) = j8$$

$$\frac{1}{4}\text{F} \longrightarrow \frac{1}{j\omega C} = \frac{1}{j(2)(1/4)} = \text{-}j2$$

$$\frac{1}{2}\text{F} \longrightarrow \frac{1}{j\omega C} = \frac{1}{j(2)(1/2)} = \text{-}j$$

To find $\mathbf{Z}_N$, consider the circuit in Fig. (a).

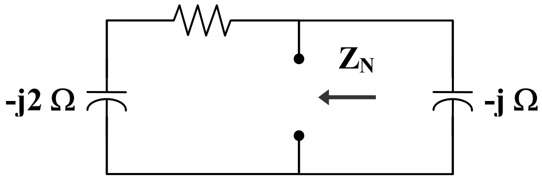

(a)

$$\mathbf{Z}_N = \text{-}j \,\|\, (2 - j2) = \frac{\text{-}j(2 - j2)}{2 - j3} = \frac{1}{13}(2 - j10)$$

To find $\mathbf{I}_N$, consider the circuit in Fig. (b).

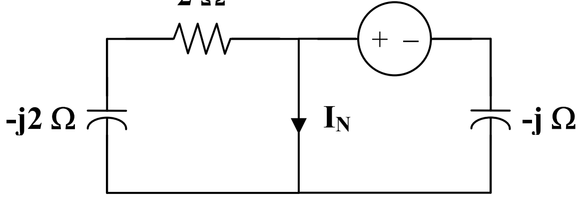

(b)

$$\mathbf{I}_N = \frac{5\angle 0°}{\text{-}j} = j5$$

The Norton equivalent of the circuit is shown in Fig. (c).

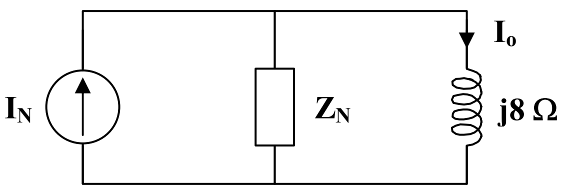

(c)

Using current division,

$$\mathbf{I}_o = \frac{\mathbf{Z}_N}{\mathbf{Z}_N + j8}\mathbf{I}_N = \frac{(1/13)(2 - j10)(j5)}{(1/13)(2 - j10) + j8} = \frac{50 + j10}{2 + j94}$$

$$\mathbf{I}_o = 0.1176 - j0.5294 = 0542\angle\text{-}77.47°$$

Therefore, $i_o =$ **<u>0.542 cos(2t – 77.47°) A</u>**

Chapter 10, Solution 66.

$$\omega = 10$$

$$0.5\text{ H} \longrightarrow j\omega L = j(10)(0.5) = j5$$

$$10\text{ mF} \longrightarrow \frac{1}{j\omega C} = \frac{1}{j(10)(10\times10^{-3})} = \text{-}j10$$

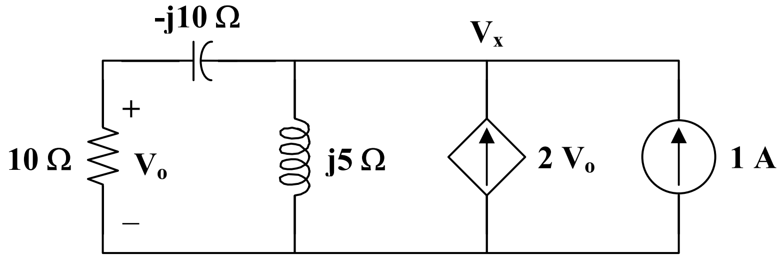

(a)

To find $\mathbf{Z}_{th}$, consider the circuit in Fig. (a).

$$1 + 2\mathbf{V}_o = \frac{\mathbf{V}_x}{j5} + \frac{\mathbf{V}_x}{10 - j10}, \qquad \text{where } \mathbf{V}_o = \frac{10\mathbf{V}_x}{10 - j10}$$

$$1 + \frac{19\mathbf{V}_x}{10 - j10} = \frac{\mathbf{V}_x}{j5} \longrightarrow \mathbf{V}_x = \frac{\text{-}10 + j10}{21 + j2}$$

$$\mathbf{Z}_N = \mathbf{Z}_{th} = \frac{\mathbf{V}_x}{1} = \frac{14.142\angle 135°}{21.095\angle 5.44°} = \underline{\mathbf{0.67\angle 129.56°\ \Omega}}$$

To find $\mathbf{V}_{th}$ and $\mathbf{I}_N$, consider the circuit in Fig. (b).

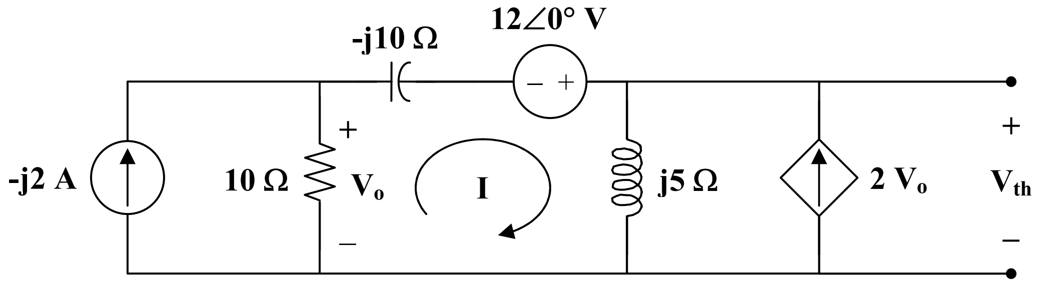

(b)

$$(10 - j10 + j5)\mathbf{I} - (10)(-j2) + j5(2\mathbf{V}_o) - 12 = 0$$

where $\mathbf{V}_o = (10)(-j2 - \mathbf{I})$

Thus,

$$(10 - j105)\mathbf{I} = -188 - j20$$

$$\mathbf{I} = \frac{188 + j20}{-10 + j105}$$

$$\mathbf{V}_{th} = j5(\mathbf{I} + 2\mathbf{V}_o) = j5(21\mathbf{I} + j40) = j105\mathbf{I} - 200$$

$$\mathbf{V}_{th} = \frac{j105(188 + j20)}{-10 + j105} - 200 = -11.802 + j2.076$$

$$\mathbf{V}_{th} = \underline{\mathbf{11.97\angle 170° \ V}}$$

$$\mathbf{I}_N = \frac{\mathbf{V}_{th}}{\mathbf{Z}_{th}} = \frac{11.97\angle 170°}{0.67\angle 129.56°} = \underline{\mathbf{17.86\angle 40.44° \ A}}$$

Chapter 10, Solution 67.

$$Z_N = Z_{Th} = 10//(13 - j5) + 12//(8 + j6) = \frac{10(13 - j5)}{23 - j5} + \frac{12(8 + j6)}{20 + j6} = \underline{11.243 + j1.079\Omega}$$

$$V_a = \frac{10}{23 - j5}(60\angle 45^o) = 13.78 + j21.44, \qquad V_b = \frac{(8 + j6)}{20 + j6}(60\angle 45^o) = 25.93 + j454.37\Omega$$

$$V_{Th} = V_a - V_b = \underline{433.1\angle -1.599^o} \text{ V}, \qquad I_N = \frac{V_{Th}}{Z_{Th}} = \underline{38.34\angle -97.09^o} \text{ A}$$

Chapter 10, Solution 68.

$$1\text{H} \longrightarrow j\omega L = j10x1 = j10$$

$$\frac{1}{20}\text{F} \longrightarrow \frac{1}{j\omega C} = \frac{1}{j10x\frac{1}{20}} = -j2$$

We obtain V_{Th} using the circuit below.

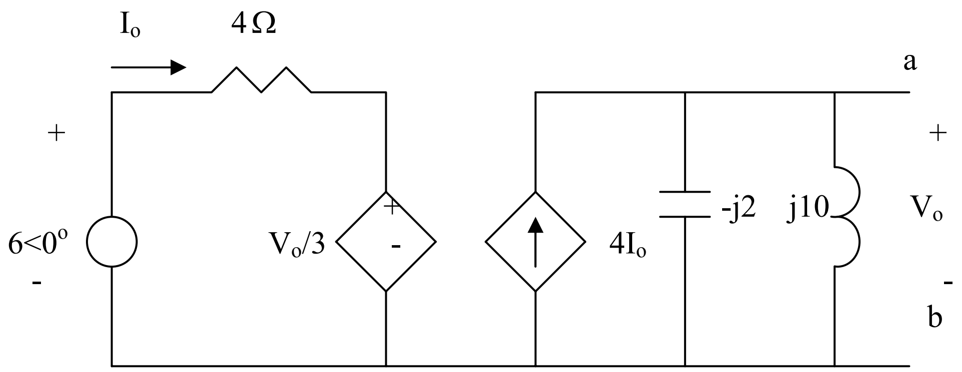

$$j10//(-j2) = \frac{j10(-j2)}{j10 - j2} = -j2.5$$

$$V_o = 4I_o x(-j2.5) = -j10I_o \qquad (1)$$

$$-6 + 4I_o + \frac{1}{3}V_o = 0 \qquad (2)$$

Combining (1) and (2) gives

$$I_o = \frac{6}{4 - j10/3}, \qquad V_{Th} = V_o = -j10I_o = \frac{-j60}{4 - j10/3} = 11.52\angle -50.19^o$$

$$\underline{v_{Th} = 11.52\sin(10t - 50.19^o)}$$

To find $R_{Th,}$ we insert a 1-A source at terminals a-b, as shown below.

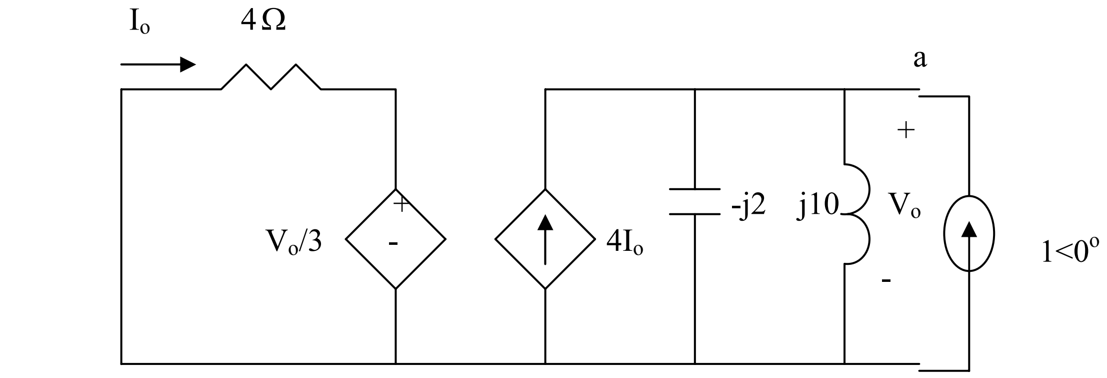

$$4I_o + \frac{1}{3}V_o = 0 \longrightarrow I_o = -\frac{V_o}{12}$$

$$1 + 4I_o = \frac{V_o}{-j2} + \frac{V_o}{j10}$$

Combining the two equations leads to

$$V_o = \frac{1}{0.333 + j0.4} = 1.2293 - j1.4766$$

$$Z_{Th} = \frac{V_o}{1} = \underline{1.2293 - 1.477\Omega}$$

Chapter 10, Solution 69.

This is an inverting op amp so that

$$\frac{\mathbf{V}_o}{\mathbf{V}_s} = \frac{-\mathbf{Z}_f}{\mathbf{Z}_i} = \frac{-R}{1/j\omega C} = \underline{\mathbf{-j\omega RC}}$$

When $\mathbf{V}_s = V_m$ and $\omega = 1/RC$,

$$\mathbf{V}_o = -j \cdot \frac{1}{RC} \cdot RC \cdot V_m = -jV_m = V_m \angle -90°$$

Therefore,

$$v_o(t) = V_m \sin(\omega t - 90°) = \underline{\mathbf{-V_m \cos(\omega t)}}$$

Chapter 10, Solution 70.

This may also be regarded as an inverting amplifier.

$$2\cos(4\times 10^4 t) \longrightarrow 2\angle 0°, \quad \omega = 4\times 10^4$$

$$10 \text{ nF} \longrightarrow \frac{1}{j\omega C} = \frac{1}{j(4\times 10^4)(10\times 10^{-9})} = -j2.5 \text{ k}\Omega$$

$$\frac{\mathbf{V}_o}{\mathbf{V}_s} = \frac{-\mathbf{Z}_f}{\mathbf{Z}_i}$$

where $\mathbf{Z}_i = 50 \text{ k}\Omega$ and $\mathbf{Z}_f = 100k \,||\, (-j2.5k) = \frac{-j100}{40 - j} \text{ k}\Omega$.

Thus, $$\frac{\mathbf{V}_o}{\mathbf{V}_s} = \frac{-j2}{40 - j}$$

If $\mathbf{V}_s = 2\angle 0°$,

$$\mathbf{V}_o = \frac{-j4}{40 - j} = \frac{4\angle -90°}{40.01\angle -1.43°} = 0.1\angle -88.57°$$

Therefore,

$$v_o(t) = \underline{\mathbf{0.1 \cos(4x10^4 t - 88.57°) \ V}}$$

Chapter 10, Solution 71.

$$8\cos(2t + 30^o) \longrightarrow 8\angle 30^o$$

$$0.5\mu F \longrightarrow \frac{1}{j\omega C} = \frac{1}{j2x0.5x10^{-6}} = -j1k\Omega$$

At the inverting terminal,

$$\frac{V_o - 8\angle 30^o}{-j1k} + \frac{V_o - 8\angle 30^o}{10k} = \frac{8\angle 30^o}{2k} \longrightarrow V_o(0.1 + j) = 8\angle 30(0.6 + j)$$

$$V_o = \frac{(6.9282 + j4)(0.6 + j)}{0.1 + j} = 9.283\angle 4.747^o$$

$v_o(t)$ = **9.283cos(2t + 4.75°) V**

Chapter 10, Solution 72.

$$4\cos(10^4 t) \longrightarrow 4\angle 0°, \quad \omega = 10^4$$

$$1\text{ nF} \longrightarrow \frac{1}{j\omega C} = \frac{1}{j(10^4)(10^{-9})} = \text{-j100 k}\Omega$$

Consider the circuit as shown below.

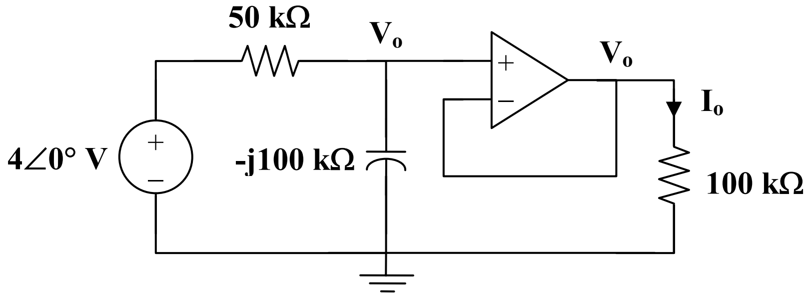

At the noninverting node,

$$\frac{4 - \mathbf{V}_o}{50} = \frac{\mathbf{V}_o}{-j100} \longrightarrow \mathbf{V}_o = \frac{4}{1 + j0.5}$$

$$\mathbf{I}_o = \frac{\mathbf{V}_o}{100k} = \frac{4}{(100)(1 + j0.5)} \text{mA} = 35.78\angle -26.56° \ \mu\text{A}$$

Therefore,

$i_o(t)$ = **35.78 cos(10^4 t – 26.56°) μA**

Chapter 10, Solution 73.

As a voltage follower, $\mathbf{V}_2 = \mathbf{V}_o$

$$C_1 = 10\text{ nF} \longrightarrow \frac{1}{j\omega C_1} = \frac{1}{j(5\times10^3)(10\times10^{-9})} = \text{-j}20\text{ k}\Omega$$

$$C_2 = 20\text{ nF} \longrightarrow \frac{1}{j\omega C_2} = \frac{1}{j(5\times10^3)(20\times10^{-9})} = \text{-j}10\text{ k}\Omega$$

Consider the circuit in the frequency domain as shown below.

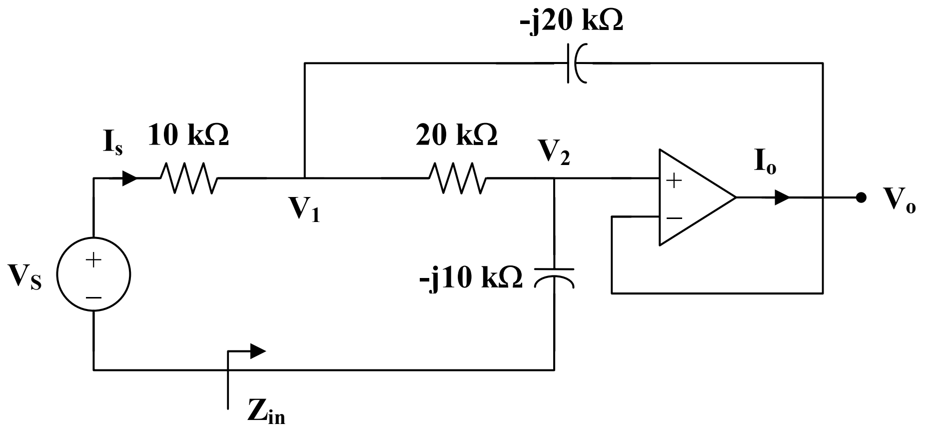

At node 1,

$$\frac{\mathbf{V}_s - \mathbf{V}_1}{10} = \frac{\mathbf{V}_1 - \mathbf{V}_o}{\text{-}j20} + \frac{\mathbf{V}_1 - \mathbf{V}_o}{20}$$

$$2\mathbf{V}_s = (3 + j)\mathbf{V}_1 - (1 + j)\mathbf{V}_o \qquad (1)$$

At node 2,

$$\frac{\mathbf{V}_1 - \mathbf{V}_o}{20} = \frac{\mathbf{V}_o - 0}{\text{-}j10}$$

$$\mathbf{V}_1 = (1 + j2)\mathbf{V}_o \qquad (2)$$

Substituting (2) into (1) gives

$$2\mathbf{V}_s = j6\mathbf{V}_o \quad \text{or} \quad \mathbf{V}_o = \text{-}j\frac{1}{3}\mathbf{V}_s$$

$$\mathbf{V}_1 = (1 + j2)\mathbf{V}_o = \left(\frac{2}{3} - j\frac{1}{3}\right)\mathbf{V}_s$$

$$\mathbf{I}_s = \frac{\mathbf{V}_s - \mathbf{V}_1}{10\text{k}} = \frac{(1/3)(1 - j)}{10\text{k}}\mathbf{V}_s$$

$$\frac{\mathbf{I}_s}{\mathbf{V}_s} = \frac{1-j}{30k}$$

$$\mathbf{Z}_{in} = \frac{\mathbf{V}_s}{\mathbf{I}_s} = \frac{30k}{1-j} = 15(1+j)\,k$$

$$\mathbf{Z}_{in} = \underline{\mathbf{21.21\angle 45^\circ\ k\Omega}}$$

Chapter 10, Solution 74.

$$\mathbf{Z}_i = R_1 + \frac{1}{j\omega C_1}, \qquad \mathbf{Z}_f = R_2 + \frac{1}{j\omega C_2}$$

$$\mathbf{A}_v = \frac{\mathbf{V}_o}{\mathbf{V}_s} = \frac{-\mathbf{Z}_f}{\mathbf{Z}_i} = \frac{R_2 + \dfrac{1}{j\omega C_2}}{R_1 + \dfrac{1}{j\omega C_1}} = \underline{\left(\frac{\mathbf{C_1}}{\mathbf{C_2}}\right)\left(\frac{\mathbf{1 + j\omega R_2 C_2}}{\mathbf{1 + j\omega R_1 C_1}}\right)}$$

At $\omega = 0$, $\qquad \mathbf{A}_v = \underline{\dfrac{\mathbf{C_1}}{\mathbf{C_2}}}$

As $\omega \to \infty$, $\qquad \mathbf{A}_v = \underline{\dfrac{\mathbf{R_2}}{\mathbf{R_1}}}$

At $\omega = \dfrac{1}{R_1 C_1}$, $\qquad \mathbf{A}_v = \underline{\left(\dfrac{\mathbf{C_1}}{\mathbf{C_2}}\right)\left(\dfrac{\mathbf{1 + jR_2C_2/R_1C_1}}{\mathbf{1+j}}\right)}$

At $\omega = \dfrac{1}{R_2 C_2}$, $\qquad \mathbf{A}_v = \underline{\left(\dfrac{\mathbf{C_1}}{\mathbf{C_2}}\right)\left(\dfrac{\mathbf{1+j}}{\mathbf{1 + jR_1C_1/R_2C_2}}\right)}$

Chapter 10, Solution 75.

$\omega = 2 \times 10^3$

$$C_1 = C_2 = 1\text{ nF} \longrightarrow \frac{1}{j\omega C_1} = \frac{1}{j(2\times 10^3)(1\times 10^{-9})} = -j500\text{ k}\Omega$$

Consider the circuit shown below.

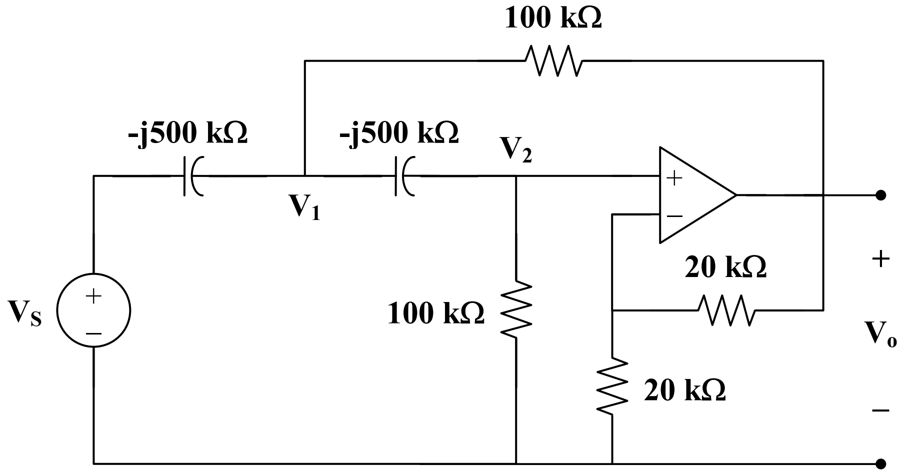

At node 1,

$$\frac{\mathbf{V}_s - \mathbf{V}_1}{-j500} = \frac{\mathbf{V}_o - \mathbf{V}_1}{100} + \frac{\mathbf{V}_1 - \mathbf{V}_2}{-j500}$$

$$\mathbf{V}_s = (2 + j5)\,\mathbf{V}_1 - j5\,\mathbf{V}_o - \mathbf{V}_2 \qquad (1)$$

At node 2,

$$\frac{\mathbf{V}_1 - \mathbf{V}_2}{-j500} = \frac{\mathbf{V}_2}{100}$$

$$\mathbf{V}_1 = (1 - j5)\,\mathbf{V}_2 \qquad (2)$$

But

$$\mathbf{V}_2 = \frac{R_3}{R_3 + R_4}\mathbf{V}_o = \frac{\mathbf{V}_o}{2} \qquad (3)$$

From (2) and (3),

$$\mathbf{V}_1 = \frac{1}{2}\cdot(1 - j5)\,\mathbf{V}_o \qquad (4)$$

Substituting (3) and (4) into (1),

$$\mathbf{V}_s = \frac{1}{2}\cdot(2 + j5)(1 - j5)\,\mathbf{V}_o - j5\,\mathbf{V}_o - \frac{1}{2}\mathbf{V}_o$$

$$\mathbf{V}_s = \frac{1}{2}\cdot(26 - j25)\,\mathbf{V}_o$$

$$\frac{\mathbf{V}_o}{\mathbf{V}_s} = \frac{2}{26 - j25} = \underline{\mathbf{0.0554\angle 43.88^\circ}}$$

Chapter 10, Solution 76.

Let the voltage between the -jkΩ capacitor and the 10kΩ resistor be $\mathbf{V}_1$.

$$\frac{2\angle 30^o - V_1}{-j4k} = \frac{V_1 - V_o}{10k} + \frac{V_1 - V_o}{20k} \longrightarrow \qquad (1)$$

$$2\angle 30^o = (1 - j0.6)V_1 + j0.6V_o$$

Also,

$$\frac{V_1 - V_o}{10k} = \frac{V_o}{-j2k} \longrightarrow V_1 = (1 + j5)V_o \qquad (2)$$

Solving (2) into (1) yields

$$V_o = 0.047 - j0.3088 = \underline{0.3123\angle -81.34^o \ \ V}$$

Chapter 10, Solution 77.

Consider the circuit below.

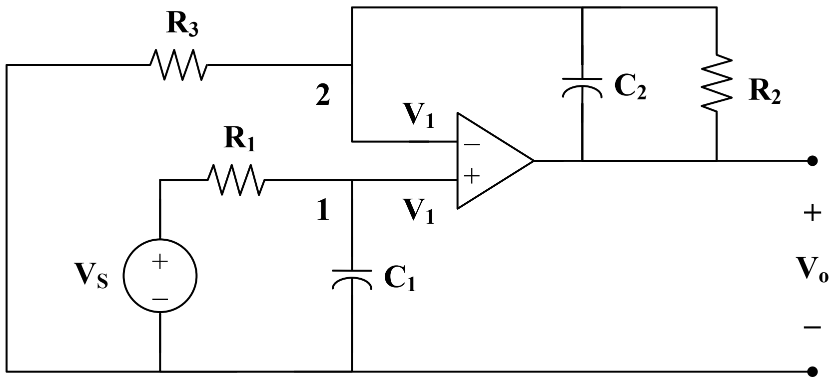

At node 1,

$$\frac{\mathbf{V}_s - \mathbf{V}_1}{R_1} = j\omega C\,\mathbf{V}_1$$

$$\mathbf{V}_s = (1 + j\omega R_1 C_1)\,\mathbf{V}_1 \qquad (1)$$

At node 2,

$$\frac{0 - \mathbf{V}_1}{R_3} = \frac{\mathbf{V}_1 - \mathbf{V}_o}{R_2} + j\omega C_2\,(\mathbf{V}_1 - \mathbf{V}_o)$$

$$\mathbf{V}_1 = (\mathbf{V}_o - \mathbf{V}_1)\left(\frac{R_3}{R_2} + j\omega C_2 R_3\right)$$

$$\mathbf{V}_o = \left(1 + \frac{1}{(R_3/R_2) + j\omega C_2 R_3}\right)\mathbf{V}_1 \qquad (2)$$

From (1) and (2),

$$\mathbf{V}_o = \frac{\mathbf{V}_s}{1 + j\omega R_1 C_1}\left(1 + \frac{R_2}{R_3 + j\omega C_2 R_2 R_3}\right)$$

$$\frac{\mathbf{V}_o}{\mathbf{V}_s} = \underline{\frac{\mathbf{R_2 + R_3 + j\omega C_2 R_2 R_3}}{\mathbf{(1 + j\omega R_1 C_1)(R_3 + j\omega C_2 R_2 R_3)}}}$$

Chapter 10, Solution 78.

$$2\sin(400t) \longrightarrow 2\angle 0°, \quad \omega = 400$$

$$0.5\ \mu\text{F} \longrightarrow \frac{1}{j\omega C} = \frac{1}{j(400)(0.5\times 10^{-6})} = \text{-j5 k}\Omega$$

$$0.25\ \mu\text{F} \longrightarrow \frac{1}{j\omega C} = \frac{1}{j(400)(0.25\times 10^{-6})} = \text{-j10 k}\Omega$$

Consider the circuit as shown below.

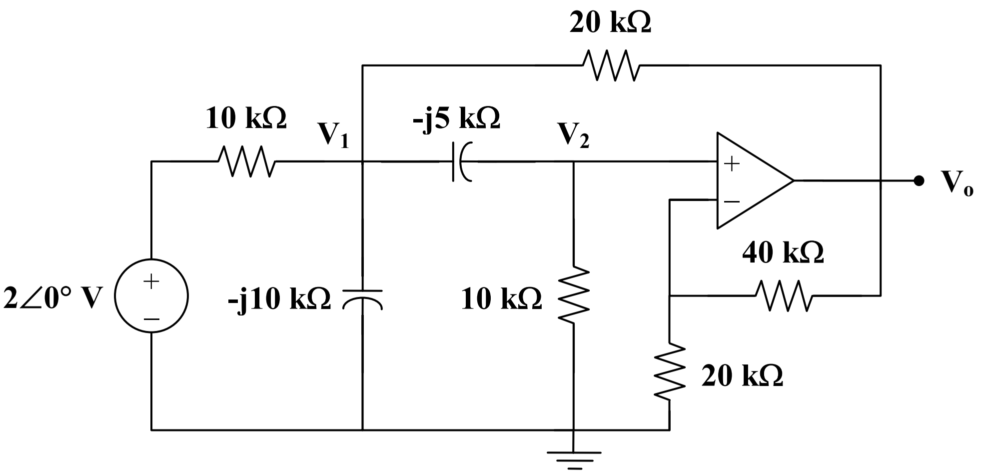

At node 1,

$$\frac{2 - \mathbf{V}_1}{10} = \frac{\mathbf{V}_1}{-j10} + \frac{\mathbf{V}_1 - \mathbf{V}_2}{-j5} + \frac{\mathbf{V}_1 - \mathbf{V}_o}{20}$$

$$4 = (3 + j6)\mathbf{V}_1 - j4\mathbf{V}_2 - \mathbf{V}_o \qquad (1)$$

At node 2,

$$\frac{\mathbf{V}_1 - \mathbf{V}_2}{-j5} = \frac{\mathbf{V}_2}{10}$$

$$\mathbf{V}_1 = (1 - j0.5)\mathbf{V}_2 \qquad (2)$$

But

$$\mathbf{V}_2 = \frac{20}{20 + 40}\mathbf{V}_o = \frac{1}{3}\mathbf{V}_o \qquad (3)$$

From (2) and (3),

$$\mathbf{V}_1 = \frac{1}{3}\cdot(1 - j0.5)\,\mathbf{V}_o \qquad (4)$$

Substituting (3) and (4) into (1) gives

$$4 = (3 + j6)\cdot\frac{1}{3}\cdot(1 - j0.5)\,\mathbf{V}_o - j\frac{4}{3}\mathbf{V}_o - \mathbf{V}_o = \left(1 - j\frac{1}{6}\right)\mathbf{V}_o$$

$$\mathbf{V}_o = \frac{24}{6 - j} = 3.945\angle 9.46°$$

Therefore,

$v_o(t) =$ **3.945 sin(400t + 9.46°) V**

Chapter 10, Solution 79.

$$5\cos(1000t) \longrightarrow 5\angle 0°, \quad \omega = 1000$$

$$0.1\ \mu\text{F} \longrightarrow \frac{1}{j\omega C} = \frac{1}{j(1000)(0.1\times 10^{-6})} = -j10\ \text{k}\Omega$$

$$0.2\ \mu\text{F} \longrightarrow \frac{1}{j\omega C} = \frac{1}{j(1000)(0.2\times 10^{-6})} = -j5\ \text{k}\Omega$$

Consider the circuit shown below.

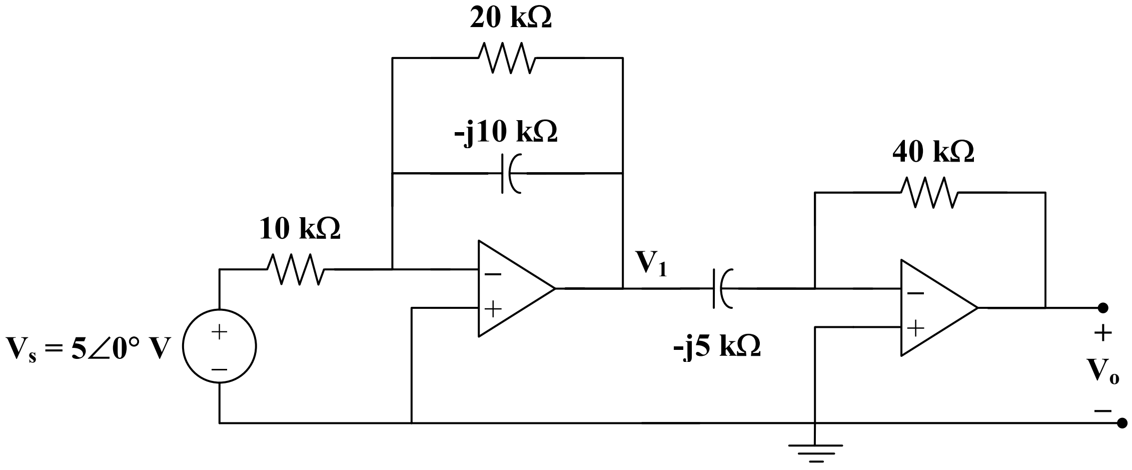

Since each stage is an inverter, we apply $\mathbf{V}_o = \frac{-\mathbf{Z}_f}{\mathbf{Z}_i}\mathbf{V}_i$ to each stage.

$$\mathbf{V}_o = \frac{-40}{-j15}\mathbf{V}_1 \qquad (1)$$

and

$$\mathbf{V}_1 = \frac{-20 \,||\, (-j10)}{10}\mathbf{V}_s \qquad (2)$$

From (1) and (2),

$$\mathbf{V}_o = \left(\frac{-j8}{10}\right)\left(\frac{-(20)(-j10)}{20 - j10}\right) 5\angle 0°$$

$$\mathbf{V}_o = 16(2 + j) = 35.78\angle 26.56°$$

Therefore, $v_o(t) =$ **35.78 cos(1000t + 26.56°) V**

Chapter 10, Solution 80.

$$4\cos(1000t - 60°) \longrightarrow 4\angle -60°, \quad \omega = 1000$$

$$0.1\ \mu\text{F} \longrightarrow \frac{1}{j\omega C} = \frac{1}{j(1000)(0.1 \times 10^{-6})} = -j10\ \text{k}\Omega$$

$$0.2\ \mu\text{F} \longrightarrow \frac{1}{j\omega C} = \frac{1}{j(1000)(0.2 \times 10^{-6})} = -j5\ \text{k}\Omega$$

The two stages are inverters so that

$$\mathbf{V}_o = \left(\frac{20}{-j10} \cdot (4\angle -60°) + \frac{20}{50}\mathbf{V}_o\right)\left(\frac{-j5}{10}\right)$$

$$= \frac{-j}{2} \cdot (j2) \cdot (4\angle -60°) + \frac{-j}{2} \cdot \frac{2}{5}\mathbf{V}_o$$

$$(1 + j/5)\,\mathbf{V}_o = 4\angle -60°$$

$$\mathbf{V}_o = \frac{4\angle -60°}{1 + j/5} = 3.922\angle -71.31°$$

Therefore, $v_o(t) =$ **3.922 cos(1000t – 71.31°) V**

Chapter 10, Solution 81.

The schematic is shown below. The pseudocomponent IPRINT is inserted to print the value of I_o in the output. We click Analysis/Setup/AC Sweep and set Total Pts. = 1, Start Freq = 0.1592, and End Freq = 0.1592. Since we assume that w = 1. The output file includes:

FREQ	IM(V_PRINT1)	IP(V_PRINT1)
1.592 E-01	1.465 E+00	7.959 E+01

Thus, I_o = $\underline{\mathbf{1.465\angle 79.59^o\ A}}$

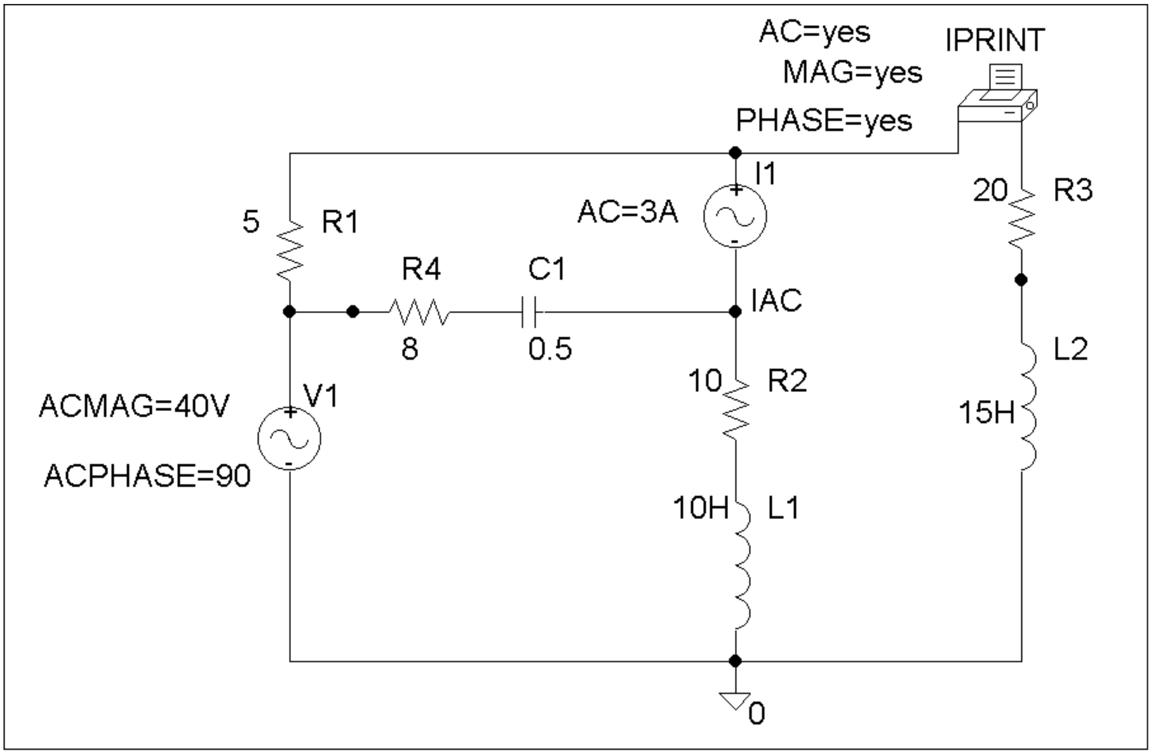

Chapter 10, Solution 82.

The schematic is shown below. We insert PRINT to print V_o in the output file. For AC Sweep, we set Total Pts = 1, Start Freq = 0.1592, and End Freq = 0.1592. After simulation, we print out the output file which includes:

FREQ	VM($N_0001)	VP($N_0001)
1.592 E-01	7.684 E+00	5.019 E+01

which means that $V_o = \underline{\mathbf{7.684\angle 50.19^o\ V}}$

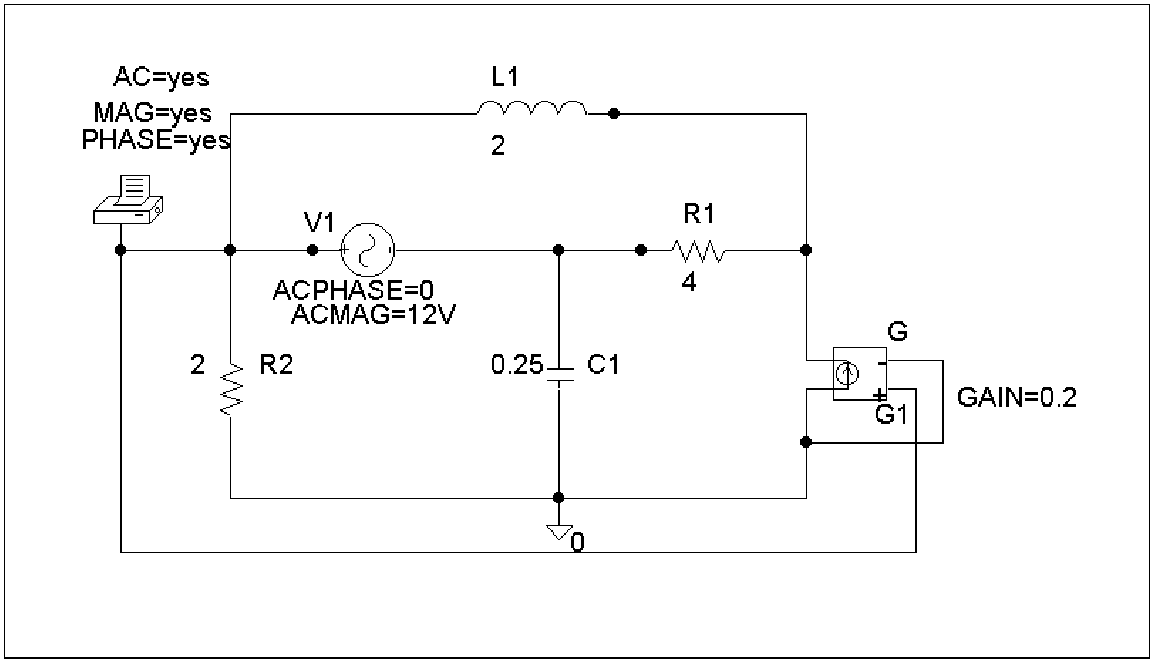

Chapter 10, Solution 83.

The schematic is shown below. The frequency is $f = \omega / 2\pi = \dfrac{1000}{2\pi} = 159.15$

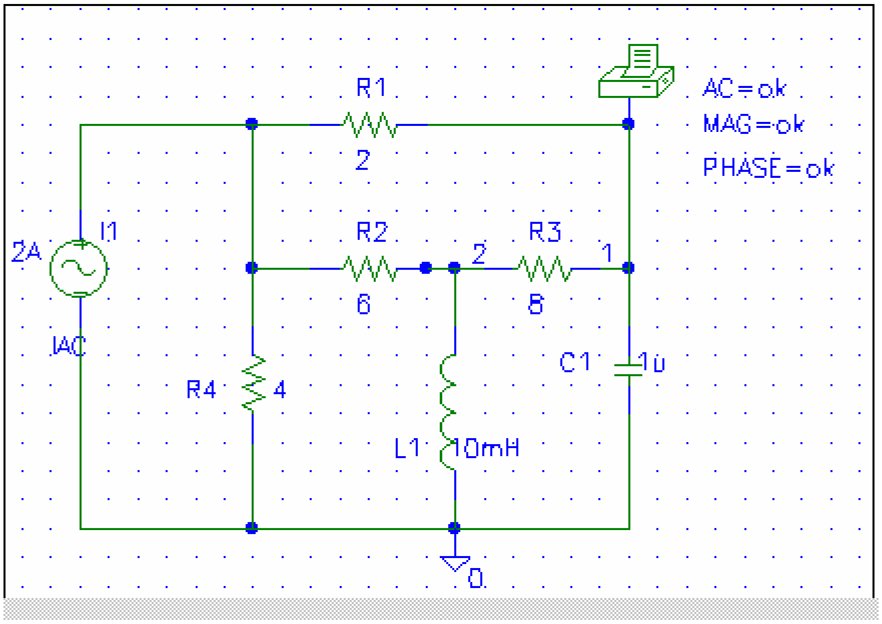

When the circuit is saved and simulated, we obtain from the output file

FREQ	VM(1)	VP(1)
1.592E+02	6.611E+00	-1.592E+02

Thus,

$$v_o = \underline{\mathbf{6.611\cos(1000t - 159.2^o)\ \ V}}$$

Chapter 10, Solution 84.

The schematic is shown below. We set PRINT to print V_o in the output file. In AC Sweep box, we set Total Pts = 1, Start Freq = 0.1592, and End Freq = 0.1592. After simulation, we obtain the output file which includes:

FREQ	VM($N_0003)	VP($N_0003)
1.592 E-01	1.664 E+00	-1.646 E+02

Namely,

$$V_o = \underline{\mathbf{1.664\angle\text{-}146.4^o\ V}}$$

Chapter 10, Solution 85.

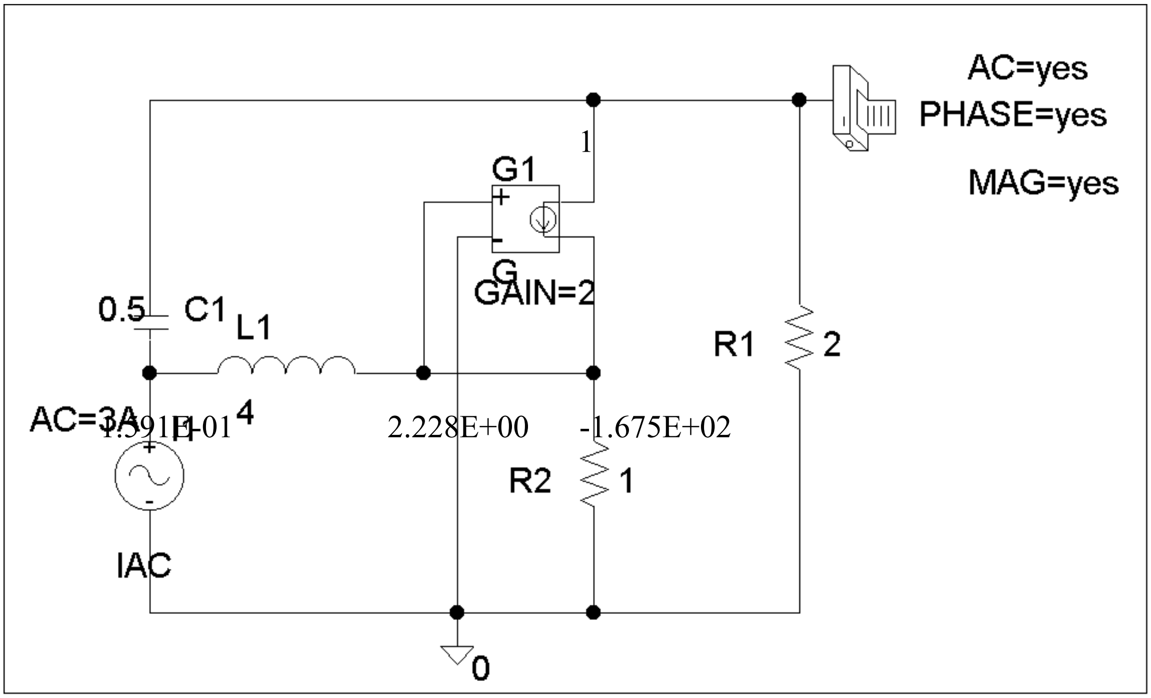

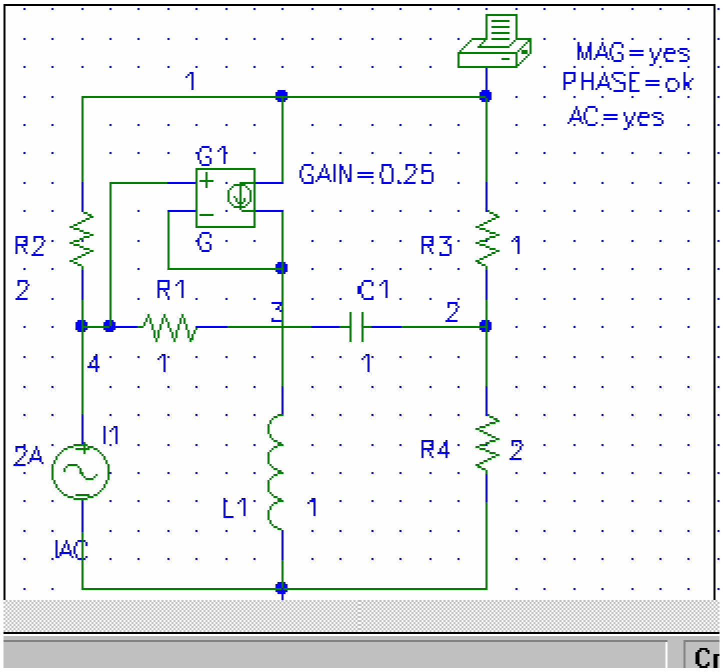

Chapter 10, Solution 86.

We insert three pseudocomponent PRINTs at nodes 1, 2, and 3 to print V_1, V_2, and V_3, into the output file. Assume that w = 1, we set Total Pts = 1, Start Freq = 0.1592, and End Freq = 0.1592. After saving and simulating the circuit, we obtain the output file which includes:

FREQ	VM($N_0002)	VP($N_0002)
1.592 E-01	6.000 E+01	3.000 E+01

FREQ	VM($N_0003)	VP($N_0003)
1.592 E-01	2.367 E+02	-8.483 E+01

FREQ VM($N_0001)
VP($N_0001)
1.592 E-01 1.082 E+02 1.254
E+02

Therefore,

V_1 = **$60\angle 30^o$ V** V_2 = **$236.7\angle -84.83^o$ V** V_3 = **$108.2\angle 125.4^o$ V**

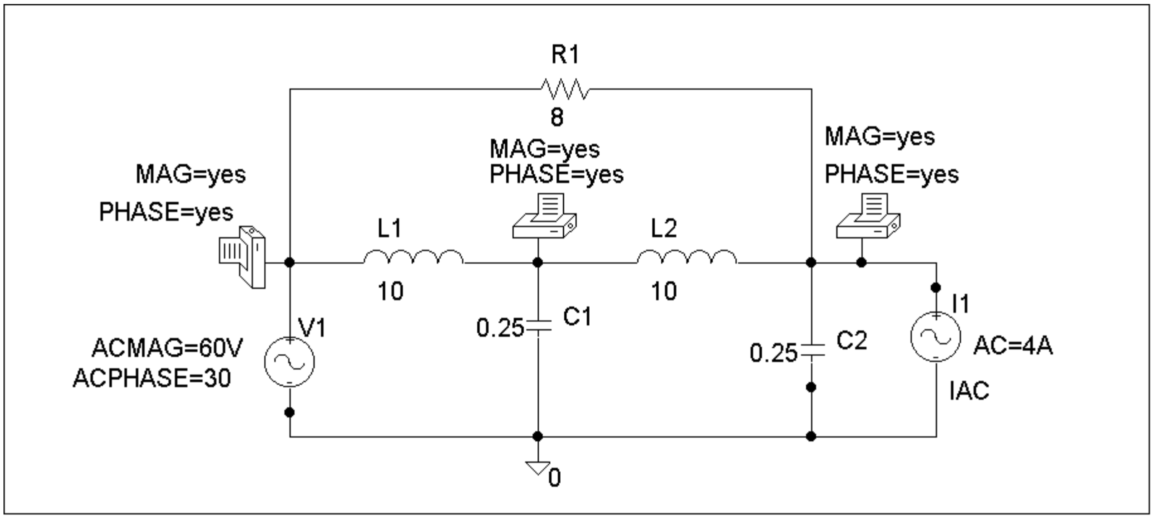

Chapter 10, Solution 87.

The schematic is shown below. We insert three PRINTs at nodes 1, 2, and 3. We set Total Pts = 1, Start Freq = 0.1592, End Freq = 0.1592 in the AC Sweep box. After simulation, the output file includes:

FREQ VM($N_0004)
VP($N_0004)
1.592 E-01 1.591 E+01 1.696
E+02

FREQ VM($N_0001)
VP($N_0001)
1.592 E-01 5.172 E+00 -1.386
E+02

FREQ VM($N_0003)

VP($N_0003)

1.592 E-01 2.270 E+00 -1.524

E+02

Therefore,

V_1 = **<u>15.91∠169.6° V</u>** V_2 = **<u>5.172∠-138.6° V</u>** V_3 = **<u>2.27∠-152.4° V</u>**

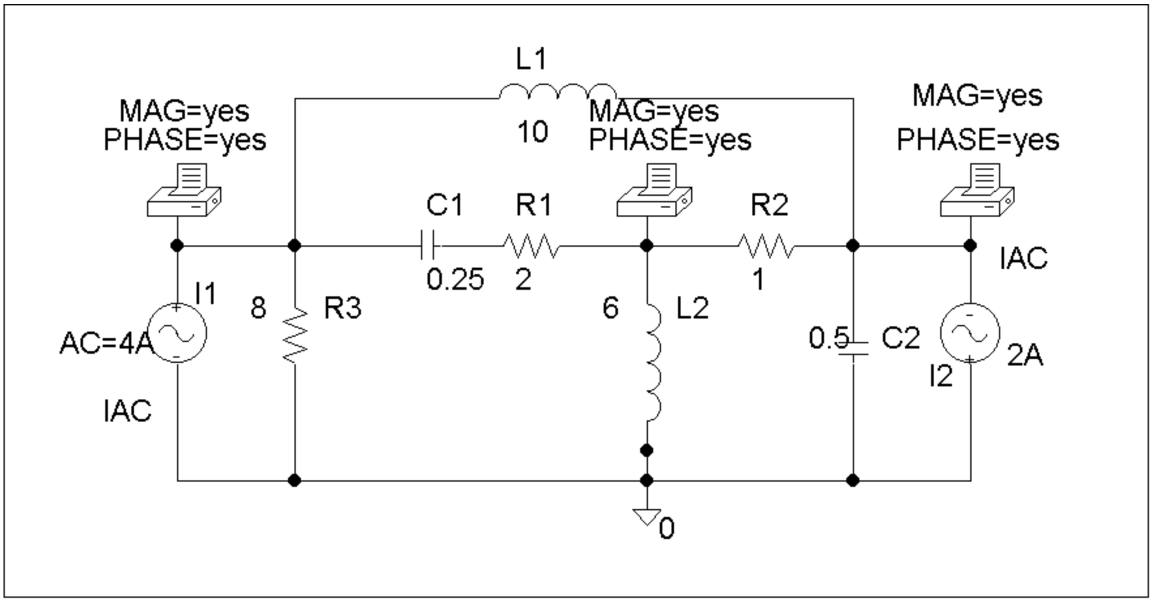

Chapter 10, Solution 88.

The schematic is shown below. We insert IPRINT and PRINT to print I_o and V_o in the output file. Since w = 4, f = w/2π = 0.6366, we set Total Pts = 1, Start Freq = 0.6366, and End Freq = 0.6366 in the AC Sweep box. After simulation, the output file includes:

FREQ VM($N_0002)

VP($N_0002)

6.366 E-01 3.496 E+01 1.261

E+01

FREQ IM(V_PRINT2) IP

(V_PRINT2)

6.366 E-01 8.912 E-01

-8.870 E+01

Therefore, $\quad V_o = 34.96\angle 12.6^o$ V, $I_o = 0.8912\angle -88.7^o$ A

v_o = **<u>34.96 cos(4t + 12.6°)V</u>**, $\quad i_o$ = **<u>0.8912cos(4t - 88.7°)A</u>**

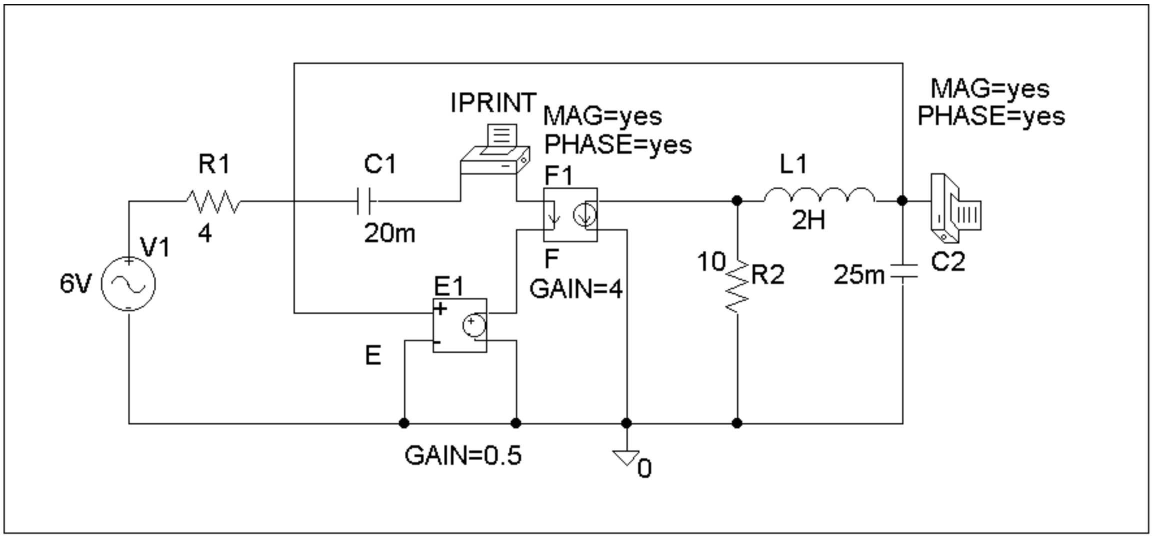

Chapter 10, Solution 89.

Consider the circuit below.

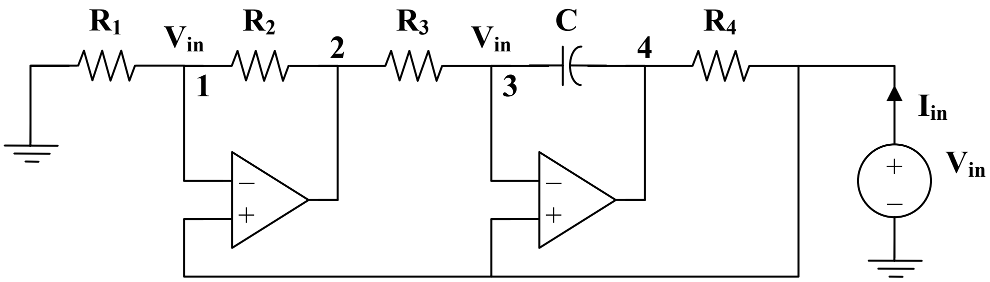

At node 1,

$$\frac{0 - \mathbf{V}_{in}}{R_1} = \frac{\mathbf{V}_{in} - \mathbf{V}_2}{R_2}$$

$$-\mathbf{V}_{in} + \mathbf{V}_2 = \frac{R_2}{R_1}\mathbf{V}_{in} \qquad (1)$$

At node 3,

$$\frac{\mathbf{V}_2 - \mathbf{V}_{in}}{R_3} = \frac{\mathbf{V}_{in} - \mathbf{V}_4}{1/j\omega C}$$

$$-\mathbf{V}_{in} + \mathbf{V}_4 = \frac{\mathbf{V}_{in} - \mathbf{V}_2}{j\omega CR_3} \qquad (2)$$

From (1) and (2),

$$-\mathbf{V}_{in} + \mathbf{V}_4 = \frac{-R_2}{j\omega CR_3R_1}\mathbf{V}_{in}$$

Thus,

$$\mathbf{I}_{in} = \frac{\mathbf{V}_{in} - \mathbf{V}_4}{R_4} = \frac{R_2}{j\omega CR_3R_1R_4}\mathbf{V}_{in}$$

$$\mathbf{Z}_{in} = \frac{\mathbf{V}_{in}}{\mathbf{I}_{in}} = \frac{j\omega CR_1R_3R_4}{R_2} = j\omega L_{eq}$$

where $$\underline{\mathbf{L_{eq}} = \frac{\mathbf{R_1R_3R_4C}}{\mathbf{R_2}}}$$

Chapter 10, Solution 90.

Let $$\mathbf{Z}_4 = R \,||\, \frac{1}{j\omega C} = \frac{R}{1 + j\omega RC}$$

$$\mathbf{Z}_3 = R + \frac{1}{j\omega C} = \frac{1 + j\omega RC}{j\omega C}$$

Consider the circuit shown below.

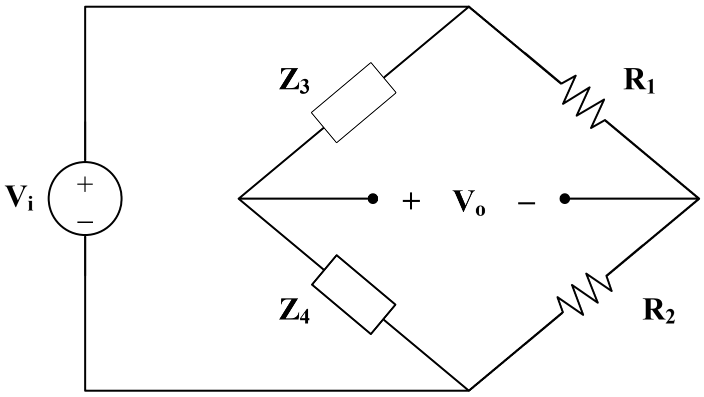

$$\mathbf{V}_o = \frac{\mathbf{Z}_4}{\mathbf{Z}_3 + \mathbf{Z}_4}\mathbf{V}_i - \frac{R_2}{R_1 + R_2}\mathbf{V}_i$$

$$\frac{\mathbf{V}_o}{\mathbf{V}_i} = \frac{\dfrac{R}{1 + j\omega C}}{\dfrac{R}{1 + j\omega C} + \dfrac{1 + j\omega RC}{j\omega C}} - \frac{R_2}{R_1 + R_2}$$

$$= \frac{j\omega RC}{j\omega RC + (1 + j\omega RC)^2} - \frac{R_2}{R_1 + R_2}$$

$$\frac{\mathbf{V}_o}{\mathbf{V}_i} = \frac{j\omega RC}{1 - \omega^2 R^2 C^2 + j3\omega RC} - \frac{R_2}{R_1 + R_2}$$

For $\mathbf{V}_o$ and $\mathbf{V}_i$ to be in phase, $\dfrac{\mathbf{V}_o}{\mathbf{V}_i}$ must be purely real. This happens when

$$1 - \omega^2 R^2 C^2 = 0$$

$$\omega = \frac{1}{RC} = 2\pi f$$

or $$f = \frac{1}{2\pi RC}$$

At this frequency,

$$\mathbf{A}_v = \frac{\mathbf{V}_o}{\mathbf{V}_i} = \frac{1}{3} - \frac{R_2}{R_1 + R_2}$$

Chapter 10, Solution 91.

(a) Let $\mathbf{V}_2 =$ voltage at the noninverting terminal of the op amp
$\mathbf{V}_o =$ output voltage of the op amp
$\mathbf{Z}_p = 10\ \text{k}\Omega = R_o$
$\mathbf{Z}_s = R + j\omega L + \dfrac{1}{j\omega C}$

As in Section 10.9,

$$\frac{\mathbf{V}_2}{\mathbf{V}_o} = \frac{\mathbf{Z}_p}{\mathbf{Z}_s + \mathbf{Z}_p} = \frac{R_o}{R + R_o + j\omega L - \frac{j}{\omega C}}$$

$$\frac{\mathbf{V}_2}{\mathbf{V}_o} = \frac{\omega C R_o}{\omega C (R + R_o) + j(\omega^2 LC - 1)}$$

For this to be purely real,

$$\omega_o^2 LC - 1 = 0 \longrightarrow \omega_o = \frac{1}{\sqrt{LC}}$$

$$f_o = \frac{1}{2\pi\sqrt{LC}} = \frac{1}{2\pi\sqrt{(0.4\times 10^{-3})(2\times 10^{-9})}}$$

$f_o =$ **<u>180 kHz</u>**

(b) At oscillation,

$$\frac{\mathbf{V}_2}{\mathbf{V}_o} = \frac{\omega_o C R_o}{\omega_o C (R + R_o)} = \frac{R_o}{R + R_o}$$

This must be compensated for by

$$\mathbf{A}_v = \frac{\mathbf{V}_o}{\mathbf{V}_2} = 1 + \frac{80}{20} = 5$$

$$\frac{R_o}{R + R_o} = \frac{1}{5} \longrightarrow R = 4R_o =$$ **<u>40 kΩ</u>**

Chapter 10, Solution 92.

Let $\mathbf{V}_2 =$ voltage at the noninverting terminal of the op amp

$\mathbf{V}_o =$ output voltage of the op amp

$\mathbf{Z}_s = R_o$

$$\mathbf{Z}_p = j\omega L \,||\, \frac{1}{j\omega C} \,||\, R = \frac{1}{\frac{1}{R} + j\omega C + \frac{1}{j\omega L}} = \frac{\omega RL}{\omega L + jR(\omega^2 LC - 1)}$$

As in Section 10.9,

$$\frac{\mathbf{V}_2}{\mathbf{V}_o} = \frac{\mathbf{Z}_p}{\mathbf{Z}_s + \mathbf{Z}_p} = \frac{\frac{\omega RL}{\omega L + jR(\omega^2 LC - 1)}}{R_o + \frac{\omega RL}{\omega L + jR(\omega^2 LC - 1)}}$$

$$\frac{\mathbf{V}_2}{\mathbf{V}_o} = \frac{\omega RL}{\omega RL + \omega R_o L + jR_o R(\omega^2 LC - 1)}$$

For this to be purely real,

$$\omega_o^2 LC = 1 \quad \longrightarrow \quad f_o = \frac{1}{2\pi\sqrt{LC}}$$

(a) At $\omega = \omega_o$,

$$\frac{\mathbf{V}_2}{\mathbf{V}_o} = \frac{\omega_o RL}{\omega_o RL + \omega_o R_o L} = \frac{R}{R + R_o}$$

This must be compensated for by

$$\mathbf{A}_v = \frac{\mathbf{V}_o}{\mathbf{V}_2} = 1 + \frac{R_f}{R_o} = 1 + \frac{1000k}{100k} = 11$$

Hence,

$$\frac{R}{R + R_o} = \frac{1}{11} \quad \longrightarrow \quad R_o = 10R = \underline{\mathbf{100\ k\Omega}}$$

(b)
$$f_o = \frac{1}{2\pi\sqrt{(10 \times 10^{-6})(2 \times 10^{-9})}}$$

$$f_o = \underline{\mathbf{1.125\ MHz}}$$

Chapter 10, Solution 93.

As shown below, the impedance of the feedback is

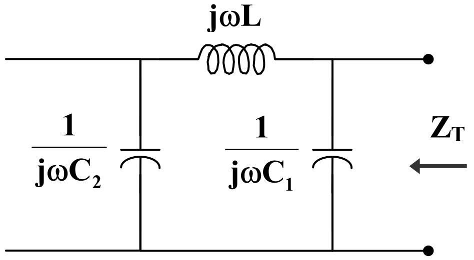

$$\mathbf{Z}_T = \frac{1}{j\omega C_1} \,||\, \left(j\omega L + \frac{1}{j\omega C_2} \right)$$

$$\mathbf{Z}_T = \frac{\frac{-j}{\omega C_1}\left(j\omega L + \frac{-j}{\omega C_2}\right)}{\frac{-j}{\omega C_1} + j\omega L + \frac{-j}{\omega C_2}} = \frac{\frac{1}{\omega} - \omega L C_2}{j(C_1 + C_2 - \omega^2 L C_1 C_2)}$$

In order for $\mathbf{Z}_T$ to be real, the imaginary term must be zero; i.e.

$$C_1 + C_2 - \omega_o^2 L C_1 C_2 = 0$$

$$\omega_o^2 = \frac{C_1 + C_2}{L C_1 C_2} = \frac{1}{L C_T}$$

$$\underline{\mathbf{f_o = \frac{1}{2\pi\sqrt{LC_T}}}}$$

Chapter 10, Solution 94.

If we select $C_1 = C_2 = 20$ nF

$$C_T = \frac{C_1 C_2}{C_1 + C_2} = \frac{C_1}{2} = 10 \text{ nF}$$

Since $f_o = \dfrac{1}{2\pi\sqrt{LC_T}}$,

$$L = \frac{1}{(2\pi f)^2 C_T} = \frac{1}{(4\pi^2)(2500 \times 10^6)(10 \times 10^{-9})} = 10.13 \text{ mH}$$

$$X_c = \frac{1}{\omega C_2} = \frac{1}{(2\pi)(50 \times 10^3)(20 \times 10^{-9})} = 159\ \Omega$$

We may select $R_i = 20$ kΩ and $R_f \geq R_i$, say $R_f = 20$ kΩ.
Thus,

$C_1 = C_2 =$ **__20 nF__**, $L =$ **__10.13 mH__** $R_f = R_i =$ **__20 kΩ__**

Chapter 10, Solution 95.

First, we find the feedback impedance.

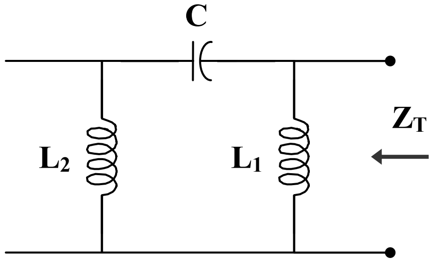

$$\mathbf{Z}_T = j\omega L_1 \,||\left(j\omega L_2 + \frac{1}{j\omega C}\right)$$

$$\mathbf{Z}_T = \frac{j\omega L_1\left(j\omega L_2 - \dfrac{j}{\omega C}\right)}{j\omega L_1 + j\omega L_2 - \dfrac{j}{\omega C}} = \frac{\omega^2 L_1 C(1-\omega L_2)}{j(\omega^2 C(L_1+L_2)-1)}$$

In order for $\mathbf{Z}_T$ to be real, the imaginary term must be zero; i.e.

$$\omega_o^2 C(L_1+L_2) - 1 = 0$$

$$\omega_o = 2\pi f_o = \frac{1}{C(L_1+L_2)}$$

$$\mathbf{f_o = \frac{1}{2\pi\sqrt{C(L_1+L_2)}}}$$

Chapter 10, Solution 96.

(a) Consider the feedback portion of the circuit, as shown below.

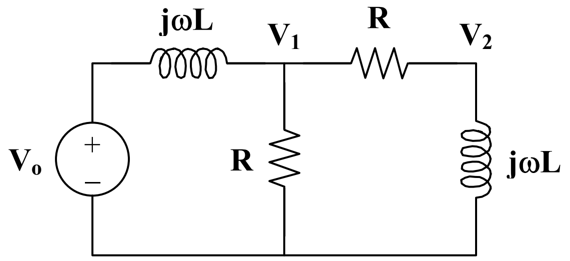

$$\mathbf{V_2} = \frac{j\omega L}{R+j\omega L}\mathbf{V_1} \longrightarrow \mathbf{V}_1 = \frac{R+j\omega L}{j\omega L}\mathbf{V}_2 \qquad (1)$$

Applying KCL at node 1,

$$\frac{\mathbf{V}_o - \mathbf{V}_1}{j\omega L} = \frac{\mathbf{V}_1}{R} + \frac{\mathbf{V}_1}{R+j\omega L}$$

$$\mathbf{V}_o - \mathbf{V}_1 = j\omega L\,\mathbf{V}_1\left(\frac{1}{R} + \frac{1}{R+j\omega L}\right)$$

$$\mathbf{V}_o = \mathbf{V}_1\left(1+\frac{j2\omega RL-\omega^2L^2}{R\,(R+j\omega L)}\right)$$

(2)

From (1) and (2),

$$\mathbf{V}_o = \left(\frac{R+j\omega L}{j\omega L}\right)\left(1+\frac{j2\omega RL-\omega^2L^2}{R\,(R+j\omega L)}\right)\mathbf{V}_2$$

$$\frac{\mathbf{V}_o}{\mathbf{V}_2} = \frac{R^2+j\omega RL+j2\omega RL-\omega^2L^2}{j\omega RL}$$

$$\frac{\mathbf{V}_2}{\mathbf{V}_o} = \frac{1}{3+\dfrac{R^2-\omega^2L^2}{j\omega RL}}$$

$$\frac{\mathbf{V}_2}{\mathbf{V}_o} = \underline{\frac{\mathbf{1}}{\mathbf{3+j(\omega L/R-R/\omega L)}}}$$

(b) Since the ratio $\frac{\mathbf{V}_2}{\mathbf{V}_o}$ must be real,

$$\frac{\omega_o L}{R}-\frac{R}{\omega_o L}=0$$

$$\omega_o L = \frac{R^2}{\omega_o L}$$

$$\omega_o = 2\pi f_o = \frac{R}{L}$$

$$\underline{\mathbf{f_o = \frac{R}{2\pi L}}}$$

(c) When $\omega = \omega_o$

$$\frac{\mathbf{V}_2}{\mathbf{V}_o} = \frac{1}{3}$$

This must be compensated for by $\mathbf{A}_v = 3$. But

$$\mathbf{A}_v = 1+\frac{R_2}{R_1} = 3$$

$$\underline{\mathbf{R_2 = 2\,R_1}}$$

Chapter 11, Solution 1.

$$v(t) = 160\cos(50t)$$
$$i(t) = -20\sin(50t - 30°) = 2\cos(50t - 30° + 180° - 90°)$$
$$i(t) = 20\cos(50t + 60°)$$

$$p(t) = v(t)\,i(t) = (160)(20)\cos(50t)\cos(50t + 60°)$$
$$p(t) = 1600\left[\cos(100t + 60°) + \cos(60°)\right]\text{ W}$$
$$p(t) = \underline{\mathbf{800 + 1600\cos(100t + 60°)\ W}}$$

$$P = \frac{1}{2}V_m I_m \cos(\theta_v - \theta_i) = \frac{1}{2}(160)(20)\cos(60°)$$

$$P = \underline{\mathbf{800\ W}}$$

Chapter 11, Solution 2.

First, transform the circuit to the frequency domain.

$$30\cos(500t) \longrightarrow 30\angle 0°, \qquad \omega = 500$$
$$0.3\text{ H} \longrightarrow j\omega L = j150$$
$$20\mu\text{F} \longrightarrow \frac{1}{j\omega C} = \frac{-j}{(500)(20)(10^{-6})} = -j100$$

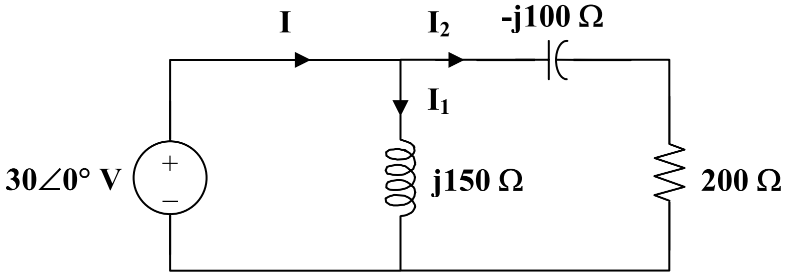

$$\mathbf{I}_1 = \frac{30\angle 0°}{j150} = 0.2\angle -90° = -j0.2$$

$$i_1(t) = 0.2\cos(500t - 90°) = 0.2\sin(500t)$$

$$\mathbf{I}_2 = \frac{30\angle 0°}{200 - j100} = \frac{0.3}{2 - j} = 0.1342\angle 26.56° = 0.12 + j0.06$$

$$i_2(t) = 0.1342\cos(500t + 25.56°)$$

$$\mathbf{I} = \mathbf{I}_1 + \mathbf{I}_2 = 0.12 - j0.14 = 0.1844\angle -49.4°$$
$$i(t) = 0.1844\cos(500t - 35°)$$

For the voltage source,

$$p(t) = v(t)\,i(t) = [\,30\cos(500t)\,] \times [\,0.1844\cos(500t - 35°)\,]$$

At $t = 2$ s,
$$p = 5.532\cos(1000)\cos(1000 - 35°)$$
$$p = (5.532)(0.5624)(0.935)$$
$$p = \underline{\mathbf{2.91\ W}}$$

For the inductor,

$$p(t) = v(t)\,i(t) = [\,30\cos(500t)\,] \times [\,0.2\sin(500t)\,]$$

At $t = 2$ s,
$$p = 6\cos(1000)\sin(1000)$$
$$p = (6)(0.5624)(0.8269)$$
$$p = \underline{\mathbf{2.79\ W}}$$

For the capacitor,

$$\mathbf{V}_c = \mathbf{I}_2\,(-j100) = 13.42\angle -63.44°$$
$$p(t) = v(t)\,i(t) = [\,13.42\cos(500 - 63.44°)\,] \times [\,0.1342\cos(500t + 25.56°)$$

At $t = 2$ s,
$$p = 18\cos(1000 - 63.44°)\cos(1000 + 26.56°)$$
$$p = (18)(0.991)(0.1329)$$
$$p = \underline{\mathbf{2.37\ W}}$$

For the resistor,

$$\mathbf{V}_R = 200\,\mathbf{I}_2 = 26.84\angle 25.56°$$
$$p(t) = v(t)\,i(t) = [\,26.84\cos(500t + 26.56°)\,] \times [\,0.1342\cos(500t + 26.56°)\,]$$

At $t = 2$ s,
$$p = 3.602\cos^2(1000 + 25.56°)$$
$$p = (3.602)(0.1329^2$$
$$p = \underline{\mathbf{0.0636\ W}}$$

Chapter 11, Solution 3.

$$10\cos(2t+30°) \longrightarrow 10\angle 30°, \qquad \omega = 2$$

$$1\text{ H} \longrightarrow j\omega L = j2$$

$$0.25\text{ F} \longrightarrow \frac{1}{j\omega C} = \text{-}j2$$

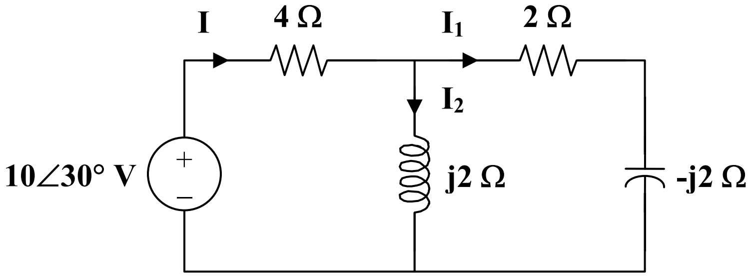

$$j2 \,||\, (2 - j2) = \frac{(j2)(2-j2)}{2} = 2 + j2$$

$$\mathbf{I} = \frac{10\angle 30°}{4 + 2 + j2} = 1.581\angle 11.565°$$

$$\mathbf{I}_1 = \frac{j2}{2}\mathbf{I} = j\mathbf{I} = 1.581\angle 101.565°$$

$$\mathbf{I}_2 = \frac{2 - j2}{2}\mathbf{I} = 2.236\angle 56.565°$$

For the source,

$$\mathbf{S} = \mathbf{V}\mathbf{I}^* = \frac{1}{2}(10\angle 30°)(1.581\angle\text{-}11.565°)$$

$$\mathbf{S} = 7.905\angle 18.43° = 7.5 + j2.5$$

The average power supplied by the source $=$ **7.5 W**

For the 4-Ω resistor, the average power absorbed is

$$P = \frac{1}{2}|\mathbf{I}|^2 R = \frac{1}{2}(1.581)^2(4) = \mathbf{5\ W}$$

For the inductor,

$$\mathbf{S} = \frac{1}{2}|\mathbf{I}_2|^2 \mathbf{Z}_L = \frac{1}{2}(2.236)^2(j2) = j5$$

The average power absorbed by the inductor $=$ **0 W**

For the 2-Ω resistor, the average power absorbed is

$$P = \frac{1}{2}|\mathbf{I}_1|^2 R = \frac{1}{2}(1.581)^2(2) = \underline{\mathbf{2.5\ W}}$$

For the capacitor,

$$\mathbf{S} = \frac{1}{2}|\mathbf{I}_1|^2 \mathbf{Z}_c = \frac{1}{2}(1.581)^2(\text{-j}2) = \text{-j}2.5$$

The average power absorbed by the capacitor $= \underline{\mathbf{0\ W}}$

Chapter 11, Solution 4.

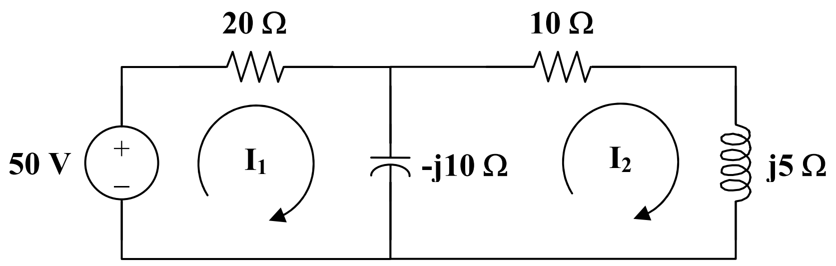

For mesh 1,

$$50 = (20 - \text{j}10)\mathbf{I}_1 + \text{j}10\mathbf{I}_2$$

$$5 = (2 - \text{j})\mathbf{I}_1 + \text{j}\mathbf{I}_2 \qquad (1)$$

For mesh 2,

$$0 = (10 + \text{j}5 - \text{j}10)\mathbf{I}_2 + \text{j}10\mathbf{I}_1$$

$$0 = (2 - \text{j})\mathbf{I}_2 + \text{j}2\mathbf{I}_1 \qquad (2)$$

In matrix form,

$$\begin{bmatrix} 5 \\ 0 \end{bmatrix} = \begin{bmatrix} 2-\text{j} & \text{j} \\ \text{j}2 & 2-\text{j} \end{bmatrix} \begin{bmatrix} \mathbf{I}_1 \\ \mathbf{I}_2 \end{bmatrix}$$

$$\Delta = 5 - \text{j}4, \qquad \Delta_1 = 5(2 - \text{j}), \qquad \Delta_2 = \text{-j}10$$

$$\mathbf{I}_1 = \frac{\Delta_1}{\Delta} = \frac{5(2-\text{j})}{5-\text{j}4} = 1.746\angle 12.1^\circ$$

$$\mathbf{I}_2 = \frac{\Delta_2}{\Delta} = \frac{\text{-j}10}{5\text{-j}4} = 1.562\angle 128.66^\circ$$

For the source,

$$\mathbf{S} = \frac{1}{2}\mathbf{V}\mathbf{I}_1^* = 43.65\angle\text{-}12.1^\circ$$

The average power supplied = $43.65\cos(12.1°)$ = $\underline{\mathbf{42.68\ W}}$

For the 20-Ω resistor,

$$P = \frac{1}{2}|\mathbf{I}_1|^2 R = \underline{\mathbf{30.48\ W}}$$

For the inductor and capacitor,

$$P = \underline{\mathbf{0\ W}}$$

For the 10-Ω resistor,

$$P = \frac{1}{2}|\mathbf{I}_2|^2 R = \underline{\mathbf{12.2\ W}}$$

Chapter 11, Solution 5.

Converting the circuit into the frequency domain, we get:

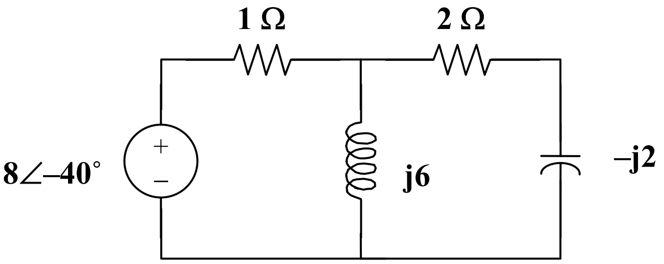

$$I_{1\Omega} = \frac{8\angle -40°}{1 + \dfrac{j6(2-j2)}{j6+2-j2}} = 1.6828\angle -25.38°$$

$$P_{1\Omega} = \frac{1.6828^2}{2}1 = \underline{1.4159\,W}$$

$$P_{3H} = P_{0.25F} = \underline{\mathbf{0}}$$

$$|I_{2\Omega}| = \left|\frac{j6}{j6+2-j2}1.6828\angle -25.38°\right| = 2.258$$

$$P_{2\Omega} = \frac{2.258^2}{2}2 = \underline{5.097\,W}$$

Chapter 11, Solution 6.

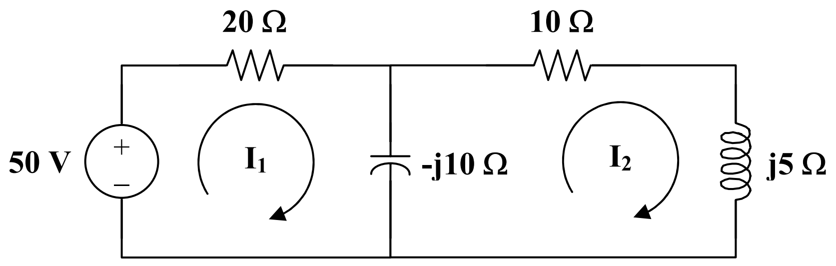

For mesh 1,

$$(4 + j2)\mathbf{I}_1 - j2(4\angle 60°) + 4\mathbf{V}_o = 0 \qquad (1)$$

$$\mathbf{V}_o = 2(4\angle 60° - \mathbf{I}_2) \qquad (2)$$

For mesh 2,

$$(2 - j)\mathbf{I}_2 - 2(4\angle 60°) - 4\mathbf{V}_o = 0 \qquad (3)$$

Substituting (2) into (3),

$$(2 - j)\mathbf{I}_2 - 8\angle 60° - 8(4\angle 60° - \mathbf{I}_2) = 0$$

$$\mathbf{I}_2 = \frac{40\angle 60°}{10 - j}$$

Hence,

$$\mathbf{V}_o = 2\left(4\angle 60° - \frac{40\angle 60°}{10 - j}\right) = \frac{-j8\angle 60°}{10 - j}$$

Substituting this into (1),

$$(4 + j2)\mathbf{I}_1 = j8\angle 60° + \frac{j32\angle 60°}{10 - j} = (j8\angle 60°)\left(\frac{14 - j}{10 - j}\right)$$

$$\mathbf{I}_1 = \frac{(4\angle 60°)(1 + j14)}{21 + j8} = 2.498\angle 125.06°$$

$$P_4 = \frac{1}{2}\left|\mathbf{I}_1\right|^2 R = \frac{1}{2}(2.498)^2(4) = \underline{\mathbf{12.48\ W}}$$

Chapter 11, Solution 7.

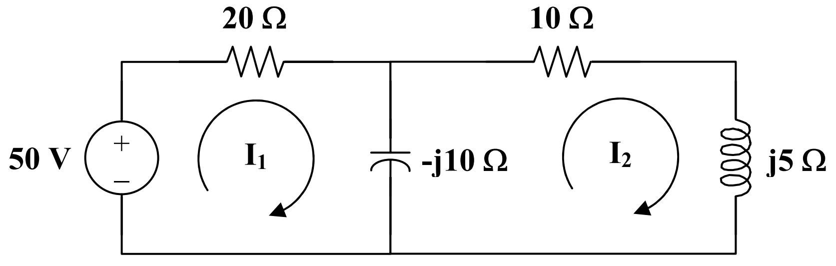

Applying KVL to the left-hand side of the circuit,

$$8\angle 20° = 4\mathbf{I}_o + 0.1\mathbf{V}_o \qquad (1)$$

Applying KCL to the right side of the circuit,

$$8\mathbf{I}_o + \frac{\mathbf{V}_1}{j5} + \frac{\mathbf{V}_1}{10 - j5} = 0$$

But, $\quad \mathbf{V}_o = \dfrac{10}{10 - j5}\mathbf{V}_1 \longrightarrow \mathbf{V}_1 = \dfrac{10 - j5}{10}\mathbf{V}_o$

Hence, $\quad 8\mathbf{I}_o + \dfrac{10 - j5}{j50}\mathbf{V}_o + \dfrac{\mathbf{V}_o}{10} = 0$

$$\mathbf{I}_o = j0.025\mathbf{V}_o \qquad (2)$$

Substituting (2) into (1),

$$8\angle 20° = 0.1\mathbf{V}_o(1 + j)$$

$$\mathbf{V}_o = \frac{80\angle 20°}{1 + j}$$

$$\mathbf{I}_1 = \frac{\mathbf{V}_o}{10} = \frac{10}{\sqrt{2}}\angle -25°$$

$$P = \frac{1}{2}|\mathbf{I}_1|^2 R = \left(\frac{1}{2}\right)\left(\frac{100}{2}\right)(10) = \underline{\mathbf{250\ W}}$$

Chapter 11, Solution 8.

We apply nodal analysis to the following circuit.

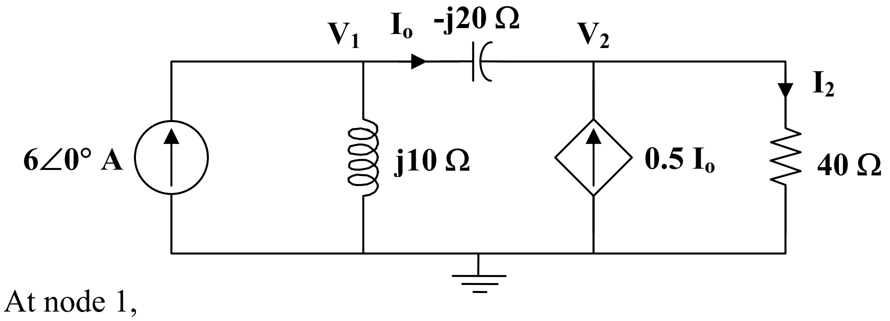

At node 1,

$$6 = \frac{\mathbf{V}_1}{j10} + \frac{\mathbf{V}_1 - \mathbf{V}_2}{-j20} \quad \mathbf{V}_1 = j120 - \mathbf{V}_2 \qquad (1)$$

At node 2,

$$0.5\mathbf{I}_o + \mathbf{I}_o = \frac{\mathbf{V}_2}{40}$$

But,
$$\mathbf{I}_o = \frac{\mathbf{V}_1 - \mathbf{V}_2}{-j20}$$

Hence,
$$\frac{1.5(\mathbf{V}_1 - \mathbf{V}_2)}{-j20} = \frac{\mathbf{V}_2}{40}$$

$$3\mathbf{V}_1 = (3 - j)\mathbf{V}_2 \qquad (2)$$

Substituting (1) into (2),
$$j360 - 3\mathbf{V}_2 - 3\mathbf{V}_2 + j\mathbf{V}_2 = 0$$

$$\mathbf{V}_2 = \frac{j360}{6 - j} = \frac{360}{37}(-1 + j6)$$

$$\mathbf{I}_2 = \frac{\mathbf{V}_2}{40} = \frac{9}{37}(-1 + j6)$$

$$P = \frac{1}{2}\left|\mathbf{I}_2\right|^2 R = \frac{1}{2}\left(\frac{9}{\sqrt{37}}\right)^2 (40) = \underline{\mathbf{43.78\ W}}$$

Chapter 11, Solution 9.

$$V_o = \left(1 + \frac{6}{2}\right)V_s = (4)(2) = 8\text{ V rms}$$

$$P_{10} = \frac{V_o^2}{R} = \frac{64}{10}\text{ mW} = \underline{\mathbf{6.4\ mW}}$$

The current through the 2 -kΩ resistor is
$$\frac{V_s}{2k} = 1\text{ mA}$$

$$P_2 = I^2 R = \underline{\mathbf{2\ mW}}$$

Similarly,
$$P_6 = I^2 R = \underline{\mathbf{6\ mW}}$$

Chapter 11, Solution 10.

No current flows through each of the resistors. Hence, for each resistor, $P = \underline{\mathbf{0\ W}}$.

Chapter 11, Solution 11.

$$\omega = 377, \qquad R = 10^4, \qquad C = 200 \times 10^{-9}$$
$$\omega RC = (377)(10^4)(200 \times 10^{-9}) = 0.754$$
$$\tan^{-1}(\omega RC) = 37.02°$$

$$Z_{ab} = \frac{10k}{\sqrt{1 + (0.754)^2}} \angle -37.02° = 6.375 \angle -37.02°\ k\Omega$$

$$i(t) = 2\sin(377t + 22°) = 2\cos(377t - 68°)\ mA$$
$$I = 2\angle -68°$$

$$S = I_{rms}^2 Z_{ab} = \left(\frac{2 \times 10^{-3}}{\sqrt{2}}\right)^2 (6.375\angle -37.02°) \times 10^3$$

$$S = 12.751\angle -37.02°\ mVA$$

$$P = |S|\cos(37.02) = \underline{\mathbf{10.181\ mW}}$$

Chapter 11, Solution 12.

(a) We find $\mathbf{Z}_{Th}$ using the circuit in Fig. (a).

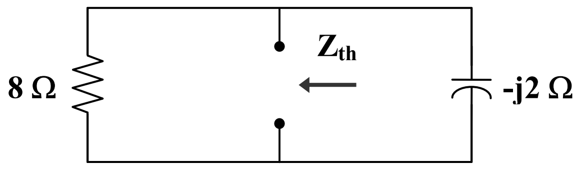

(a)

$$\mathbf{Z}_{Th} = 8 \parallel -j2 = \frac{(8)(-j2)}{8 - j2} = \frac{8}{17}(1 - j4) = 0.471 - j1.882$$

$$\mathbf{Z}_L = \mathbf{Z}_{Th}^* = \underline{\mathbf{0.471 + j1.882\ \Omega}}$$

We find $\mathbf{V}_{Th}$ using the circuit in Fig. (b).

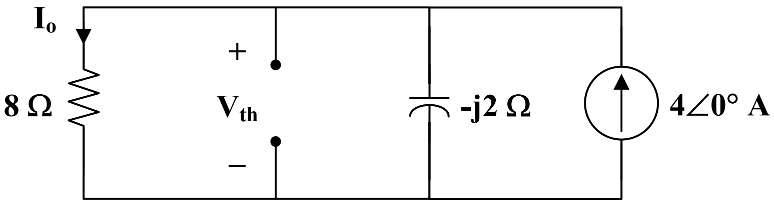

(b)

$$\mathbf{I}_o = \frac{-j2}{8-j2}(4\angle 0°)$$

$$\mathbf{V}_{Th} = 8\mathbf{I}_o = \frac{-j64}{8-j2}$$

$$P_{max} = \frac{|\mathbf{V}_{Th}|^2}{8R_L} = \frac{\left(\frac{64}{\sqrt{68}}\right)^2}{(8)(0.471)} = \underline{\mathbf{15.99\ W}}$$

(b) We obtain $\mathbf{Z}_{Th}$ from the circuit in Fig. (c).

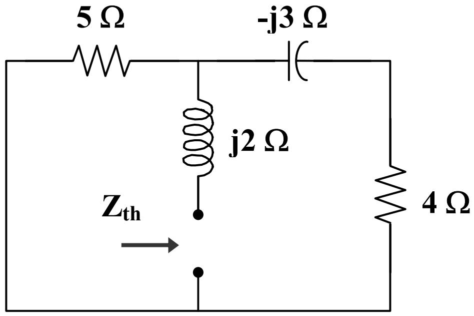

(c)

$$\mathbf{Z}_{Th} = j2 + 5 \,||\, (4-j3) = j2 + \frac{(5)(4-j3)}{9-j3} = 2.5 + j1.167$$

$$\mathbf{Z}_L = \mathbf{Z}_{Th}^* = \underline{\mathbf{2.5 - j1.167\ \Omega}}$$

Chapter 11, Solution 13.

(a) We find $\mathbf{Z}_{Th}$ at the load terminals using the circuit in Fig. (a).

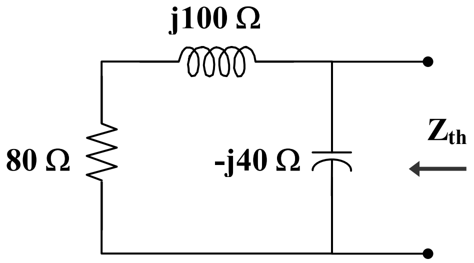

(a)

$$\mathbf{Z}_{Th} = \text{-j}40 \,||\, (80 + \text{j}100) = \frac{(\text{-j}40)(80 + \text{j}100)}{80 + \text{j}60} = 51.2 - \text{j}1.6$$

$$\mathbf{Z}_L = \mathbf{Z}_{Th}^* = \underline{\mathbf{51.2 + j1.6\,\Omega}}$$

(b) We find $\mathbf{V}_{Th}$ at the load terminals using Fig. (b).

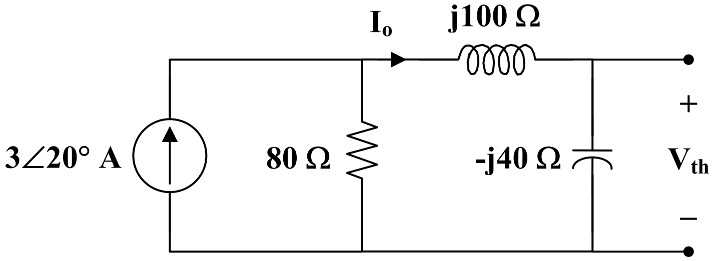

(b)

$$\mathbf{I}_o = \frac{80}{80 + \text{j}100 - \text{j}40}(3\angle 20°) = \frac{(8)(3\angle 20°)}{8 + \text{j}6}$$

$$\mathbf{V}_{Th} = \text{-j}40\,\mathbf{I}_o = \frac{(\text{-j}40)(24\angle 20°)}{8 + \text{j}6}$$

$$P_{max} = \frac{|\mathbf{V}_{Th}|^2}{8R_L} = \frac{\left(\frac{40}{10}\cdot 24\right)^2}{(8)(51.2)} = \underline{\mathbf{22.5\ W}}$$

From Fig.(d), we obtain $\mathbf{V}_{Th}$ using the voltage division principle.

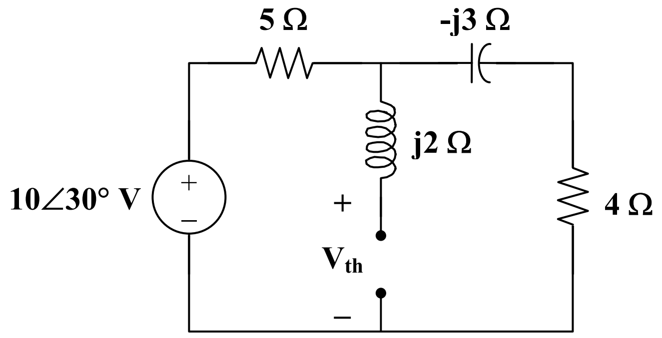

(d)

$$\mathbf{V}_{Th} = \left(\frac{4-j3}{9-j3}\right)(10\angle 30°) = \left(\frac{4-j3}{3-j}\right)\left(\frac{10}{3}\angle 30°\right)$$

$$P_{max} = \frac{|\mathbf{V}_{Th}|^2}{8R_L} = \frac{\left(\frac{5}{\sqrt{10}}\cdot\frac{10}{3}\right)^2}{(8)(2.5)} = \underline{\mathbf{1.389\ W}}$$

Chapter 11, Solution 14.

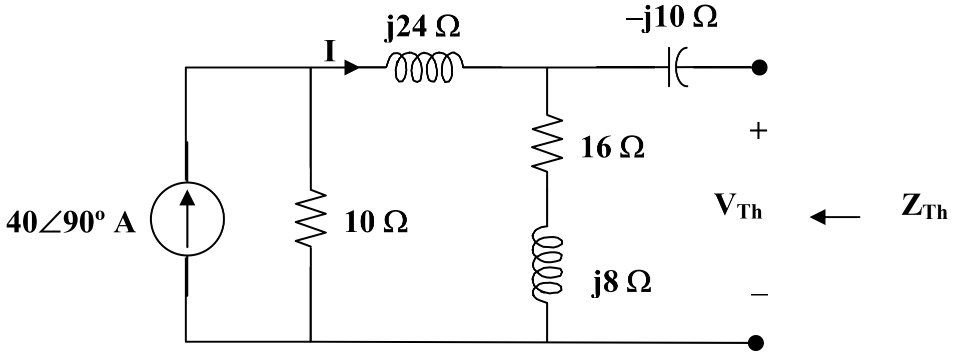

$$Z_{Th} = -j10 + \frac{(10+j24)(16+j8)}{10+j24+16+j8} = -j10 + 8.245 + j7.7 = 8.245 - j2.3\Omega$$

$$Z = Z_{Th}^{*} = \underline{8.245 + j2.3\Omega}$$

$$V_{Th} = I(16+j8) = \frac{10}{10+j24+16+j8} j40(16+j8)$$
$$= 173.55\angle 65.66° = 71.53 + j158.12 \text{ V}$$

$$P_{max} = \left|I_{rms}^2\right| 8.245 = \frac{\frac{\left|V_{Th}^2\right|}{\sqrt{2}^2}}{(2x8.245)^2} 8.245 = \underline{456.6 \text{ W}}$$

Chapter 11, Solution 15.

To find $\mathbf{Z}_{Th}$, insert a 1-A current source at the load terminals as shown in Fig. (a).

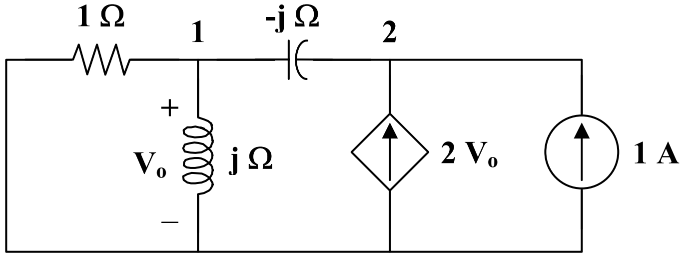

(a)

At node 1,

$$\frac{\mathbf{V}_o}{1} + \frac{\mathbf{V}_o}{j} = \frac{\mathbf{V}_2 - \mathbf{V}_o}{-j} \longrightarrow \mathbf{V}_o = j\mathbf{V}_2 \qquad (1)$$

At node 2,

$$1 + 2\mathbf{V}_o = \frac{\mathbf{V}_2 - \mathbf{V}_o}{-j} \longrightarrow 1 = j\mathbf{V}_2 - (2+j)\mathbf{V}_o \qquad (2)$$

Substituting (1) into (2),

$$1 = j\mathbf{V}_2 - (2+j)(j)\mathbf{V}_2 = (1-j)\mathbf{V}_2$$

$$\mathbf{V}_2 = \frac{1}{1-j}$$

$$\mathbf{V}_{Th} = \frac{\mathbf{V}_2}{1} = \frac{1+j}{2} = 0.5 + j0.5$$

$$\mathbf{Z}_L = \mathbf{Z}_{Th}^* = \underline{\mathbf{0.5 - j0.5\ \Omega}}$$

We now obtain $\mathbf{V}_{Th}$ from Fig. (b).

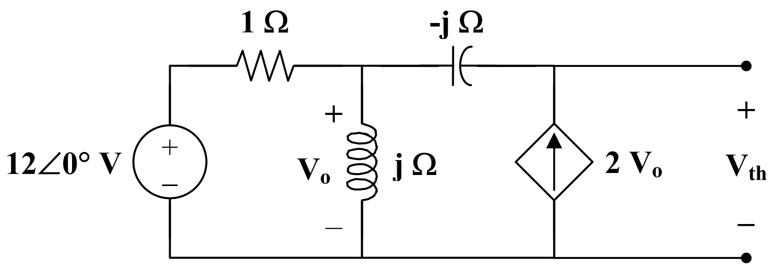

(b)

$$2\mathbf{V}_o + \frac{12 - \mathbf{V}_o}{1} = \frac{\mathbf{V}_o}{j}$$

$$\mathbf{V}_o = \frac{-12}{1+j}$$

$$\mathbf{V}_o - (-j \times 2\mathbf{V}_o) + \mathbf{V}_{Th} = 0$$

$$\mathbf{V}_{Th} = -(1+j2)\mathbf{V}_o = \frac{(12)(1+j2)}{1+j}$$

$$P_{max} = \frac{|\mathbf{V}_{Th}|^2}{8R_L} = \frac{\left(\frac{12\sqrt{5}}{\sqrt{2}}\right)^2}{(8)(0.5)} = \underline{\mathbf{90\ W}}$$

Chapter 11, Solution 16.

$$\omega = 4, \quad 1H \longrightarrow j\omega L = j4, \quad 1/20F \longrightarrow \frac{1}{j\omega C} = \frac{1}{j4x1/20} = -j5$$

We find the Thevenin equivalent at the terminals of Z_L. To find V_{Th}, we use the circuit shown below.

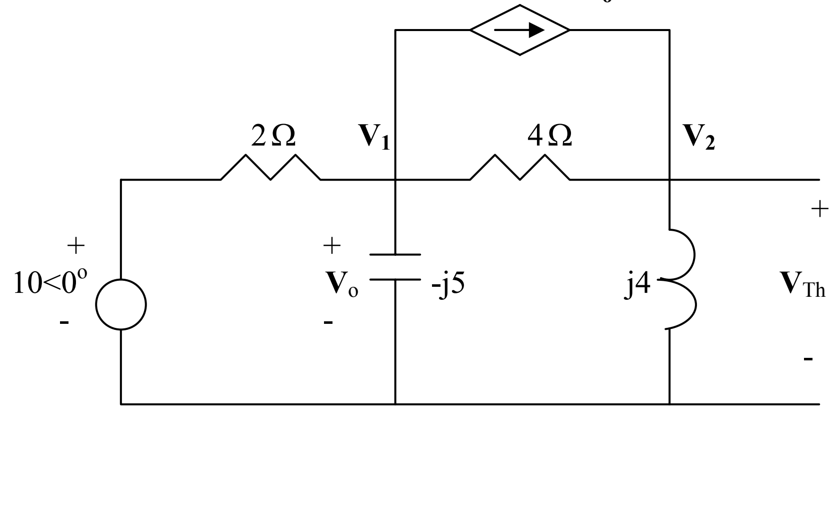

At node 1,

$$\frac{10-V_1}{2} = \frac{V_1}{-j5} + 0.25V_1 + \frac{V_1 - V_2}{4} \longrightarrow 5 = V_1(1+j0.2) - 0.25V_2 \quad (1)$$

At node 2,

$$\frac{V_1 - V_2}{4} + 0.25V_1 = \frac{V_2}{j4} \longrightarrow 0 = 0.5V_1 + V_2(-0.25 + j0.25) \quad (2)$$

Solving (1) and (2) leads to

$V_{Th} = V_2 = 6.1947 + j7.0796 = \underline{9.4072\angle 48.81^o}$

Chapter 11, Solution 17.

We find R_{Th} at terminals a-b following Fig. (a).

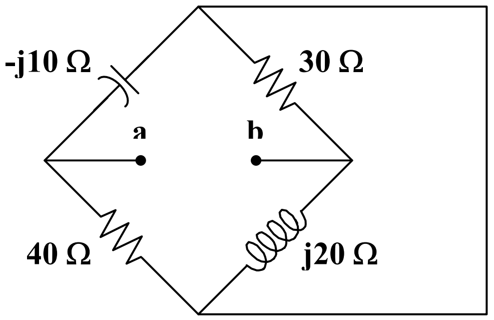

(a)

$$\mathbf{Z}_{Th} = 30 \,||\, j20 + 40 \,||\, (-j10) = \frac{(30)(j20)}{30+j20} + \frac{(40)(-j10)}{40-j10}$$

$$\mathbf{Z}_{Th} = 9.23 + j13.85 + 2.353 - j9.41$$

$$\mathbf{Z}_{Th} = 11.583 + j4.44\ \Omega$$

$$\mathbf{Z}_L = \mathbf{Z}^*_{Th} = \underline{\mathbf{11.583 - j4.44\ \Omega}}$$

We obtain $\mathbf{V}_{Th}$ from Fig. (b).

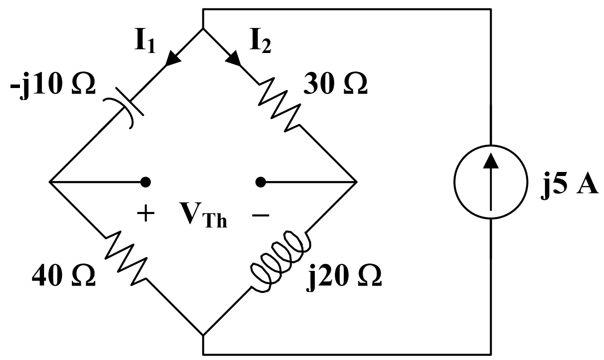

(b)

Using current division,

$$\mathbf{I}_1 = \frac{30 + j20}{70 + j10}(j5) = -1.1 + j2.3$$

$$\mathbf{I}_2 = \frac{40 - j10}{70 + j10}(j5) = 1.1 + j2.7$$

$$\mathbf{V}_{Th} = 30\mathbf{I}_2 + j10\mathbf{I}_1 = 10 + j70$$

$$P_{max} = \frac{\left|\mathbf{V}_{Th}\right|^2}{8R_L} = \frac{5000}{(8)(11.583)} = \underline{\mathbf{53.96\ W}}$$

Chapter 11, Solution 18.

We find $\mathbf{Z}_{Th}$ at terminals a-b as shown in the figure below.

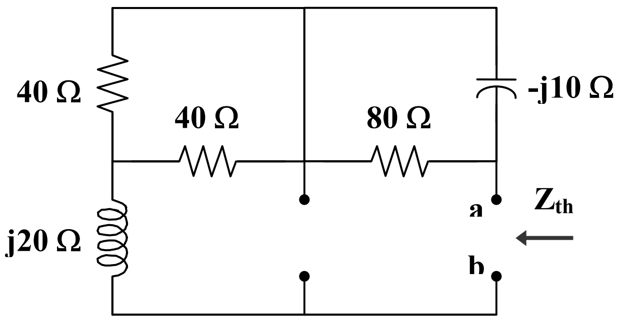

$$\mathbf{Z}_{Th} = j20 + 40 \,||\, 40 + 80 \,||\, (-j10) = j20 + 20 + \frac{(80)(-j10)}{80 - j10}$$

$$\mathbf{Z}_{Th} = 21.23 + j10.154$$

$$\mathbf{Z}_L = \mathbf{Z}_{Th}^* = \underline{\mathbf{21.23 - j10.15\ \Omega}}$$

Chapter 11, Solution 19.

At the load terminals,

$$\mathbf{Z}_{Th} = -j2 + 6 \,||\, (3 + j) = -j2 + \frac{(6)(3 + j)}{9 + j}$$

$$\mathbf{Z}_{Th} = 2.049 - j1.561$$

$$R_L = \left|\mathbf{Z}_{Th}\right| = 2.576\ \Omega$$

To get $\mathbf{V}_{Th}$, let $\mathbf{Z} = 6 \,||\, (3 + j) = 2.049 + j0.439$.

By transforming the current sources, we obtain

$$\mathbf{V}_{Th} = (4\angle 0°)\,\mathbf{Z} = 8.196 + j1.756$$

$$P_{max} = \frac{\left|\mathbf{V}_{Th}\right|^2}{8R_L} = \frac{70.258}{20.608} = \underline{\mathbf{3.409\ W}}$$

Chapter 11, Solution 20.

Combine j20 Ω and -j10 Ω to get

$$j20 \,||\, \text{-}j10 = \text{-}j20$$

To find $\mathbf{Z}_{Th}$, insert a 1-A current source at the terminals of R_L, as shown in Fig. (a).

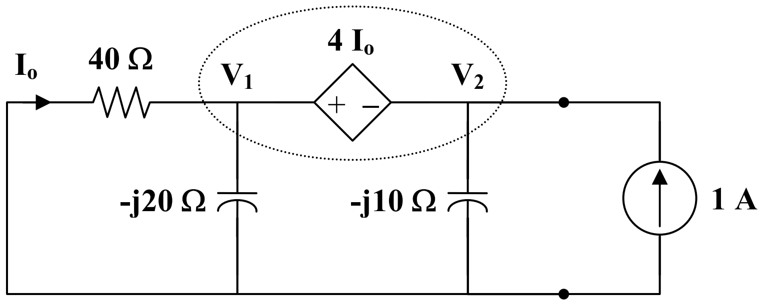

(a)

At the supernode,

$$1 = \frac{\mathbf{V}_1}{40} + \frac{\mathbf{V}_1}{\text{-}j20} + \frac{\mathbf{V}_2}{\text{-}j10}$$

$$40 = (1 + j2)\,\mathbf{V}_1 + j4\,\mathbf{V}_2 \qquad (1)$$

Also, $\quad \mathbf{V}_1 = \mathbf{V}_2 + 4\,\mathbf{I}_o$, $\quad$ where $\mathbf{I}_o = \dfrac{\text{-}\mathbf{V}_1}{40}$

$$1.1\,\mathbf{V}_1 = \mathbf{V}_2 \longrightarrow \mathbf{V}_1 = \frac{\mathbf{V}_2}{1.1} \qquad (2)$$

Substituting (2) into (1),

$$40 = (1 + j2)\left(\frac{\mathbf{V}_2}{1.1}\right) + j4\,\mathbf{V}_2$$

$$\mathbf{V}_2 = \frac{44}{1 + j6.4}$$

$$\mathbf{Z}_{Th} = \frac{\mathbf{V}_2}{1} = 1.05 - j6.71\,\Omega$$

$$R_L = \left| \mathbf{Z}_{Th} \right| = \underline{\mathbf{6.792\,\Omega}}$$

To find $\mathbf{V}_{Th}$, consider the circuit in Fig. (b).

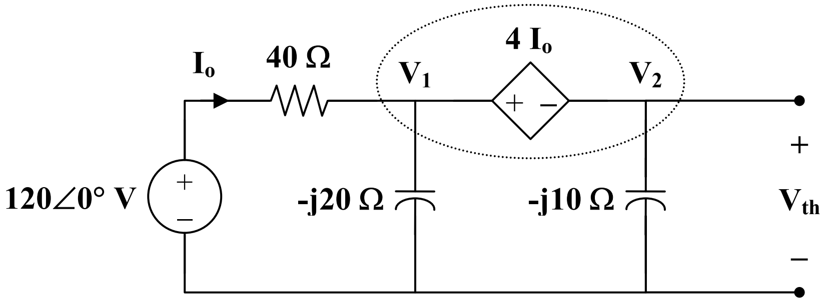

(b)

At the supernode,

$$\frac{120 - \mathbf{V}_1}{40} = \frac{\mathbf{V}_1}{-j20} + \frac{\mathbf{V}_2}{-j10}$$

$$120 = (1 + j2)\,\mathbf{V}_1 + j4\,\mathbf{V}_2 \qquad (3)$$

Also, $\mathbf{V}_1 = \mathbf{V}_2 + 4\,\mathbf{I}_o$, where $\mathbf{I}_o = \dfrac{120 - \mathbf{V}_1}{40}$

$$\mathbf{V}_1 = \frac{\mathbf{V}_2 + 12}{1.1} \qquad (4)$$

Substituting (4) into (3),

$$109.09 - j21.82 = (0.9091 + j5.818)\,\mathbf{V}_2$$

$$\mathbf{V}_{Th} = \mathbf{V}_2 = \frac{109.09 - j21.82}{0.9091 + j5.818} = 18.893\angle -92.43°$$

$$P_{max} = \frac{\left| \mathbf{V}_{Th} \right|^2}{8\,R_L} = \frac{(18.893)^2}{(8)(6.792)} = \underline{\mathbf{6.569\ W}}$$

Chapter 11, Solution 21.

We find $\mathbf{Z}_{Th}$ at terminals a-b, as shown in the figure below.

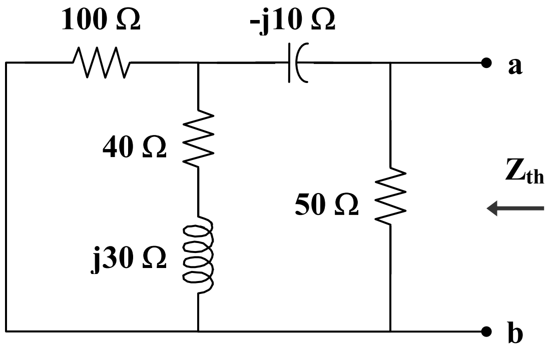

$$\mathbf{Z}_{Th} = 50 \,||\, [\,-\,j10 + 100 \,||\, (40 + j30)\,]$$

where $100 \,||\, (40 + j30) = \dfrac{(100)(40 + j30)}{140 + j30} = 31.707 + j14.634$

$$\mathbf{Z}_{Th} = 50 \,||\, (31.707 + j4.634) = \frac{(50)(31.707 + j4.634)}{81.707 + j4.634}$$

$$\mathbf{Z}_{Th} = 19.5 + j1.73$$

$$R_L = \left|\mathbf{Z}_{Th}\right| = \underline{\mathbf{19.58\ \Omega}}$$

Chapter 11, Solution 22.

$$i(t) = 4\sin t, \qquad 0 < t < \pi$$

$$I^2_{rms} = \frac{1}{\pi}\int_0^{\pi} 16\sin^2 t dt = \frac{16}{\pi}\left(\frac{t}{2} - \frac{\sin 2t}{4}\right)\Big|_0^{\pi} = \frac{16}{\pi}\left(\frac{\pi}{2} - 0\right) = 8$$

$$I_{rms} = \sqrt{8} = \underline{2.828\ \text{A}}$$

Chapter 11, Solution 23.

$$v(t) = \begin{cases} 15, & 0 < t < 2 \\ 5, & 2 < t < 6 \end{cases}$$

$$V_{rms}^2 = \frac{1}{6}\left[\int_0^2 15^2\ dt + \int_2^6 5^2\ dt\right] = \frac{550}{6}$$

$$V_{rms} = \underline{\mathbf{9.574\ V}}$$

Chapter 11, Solution 24.

$$T = 2, \qquad v(t) = \begin{cases} 5, & 0 < t < 1 \\ -5, & 1 < t < 2 \end{cases}$$

$$V_{rms}^2 = \frac{1}{2}\left[\int_0^1 5^2\ dt + \int_1^2 (-5)^2\ dt\right] = \frac{25}{2}[1+1] = 25$$

$$V_{rms} = \underline{\mathbf{5\ V}}$$

Chapter 11, Solution 25.

$$f_{rms}^2 = \frac{1}{T}\int_0^T f^2(t)dt = \frac{1}{3}\left[\int_0^1 (-4)^2 dt + \int_1^2 0dt + \int_2^3 4^2 dt\right]$$

$$= \frac{1}{3}[16 + 0 + 16] = \frac{32}{3}$$

$$f_{rms} = \sqrt{\frac{32}{3}} = \underline{3.266}$$

Chapter 11, Solution 26.

$$T = 4, \qquad v(t) = \begin{cases} 5 & 0 < t < 2 \\ 10 & 2 < t < 4 \end{cases}$$

$$V_{rms}^2 = \frac{1}{4}\left[\int_0^2 5^2\,dt + \int_2^4 (10)^2\,dt\right] = \frac{1}{4}[50 + 200] = 62.5$$

$$V_{rms} = \underline{\mathbf{7.906\ V}}$$

Chapter 11, Solution 27.

$$T = 5, \qquad i(t) = t, \quad 0 < t < 5$$

$$I_{rms}^2 = \frac{1}{5}\int_0^5 t^2\,dt = \frac{1}{5}\cdot\frac{t^3}{3}\Big|_0^5 = \frac{125}{15} = 8.333$$

$$I_{rms} = \underline{\mathbf{2.887\ A}}$$

Chapter 11, Solution 28.

$$V_{rms}^2 = \frac{1}{5}\left[\int_0^2 (4t)^2\,dt + \int_2^5 0^2\,dt\right]$$

$$V_{rms}^2 = \frac{1}{5}\cdot\frac{16t^3}{3}\Big|_0^2 = \frac{16}{15}(8) = 8.533$$

$$V_{rms} = \underline{\mathbf{2.92\ V}}$$

$$P = \frac{V_{rms}^2}{R} = \frac{8.533}{2} = \underline{\mathbf{4.267\ W}}$$

Chapter 11, Solution 29.

$$T = 20, \qquad i(t) = \begin{cases} 20 - 2t & 5 < t < 15 \\ -40 + 2t & 15 < t < 25 \end{cases}$$

$$I_{eff}^2 = \frac{1}{20}\left[\int_5^{15} (20 - 2t)^2\ dt + \int_{15}^{25} (-40 + 2t)^2\ dt\right]$$

$$I_{eff}^2 = \frac{1}{5}\left[\int_5^{15} (100 - 20t + t^2)\ dt + \int_{15}^{25} (t^2 - 40t + 400)\ dt\right]$$

$$I_{eff}^2 = \frac{1}{5}\left[\left(100t - 10t^2 + \frac{t^3}{3}\right)\Bigg|_5^{15} + \left(\frac{t^3}{3} - 20t^2 + 400t\right)\Bigg|_{15}^{25}\right]$$

$$I_{eff}^2 = \frac{1}{5}[83.33 + 83.33] = 33.332$$

$$I_{eff} = \underline{\mathbf{5.773\ A}}$$

$$P = I_{eff}^2 R = \underline{\mathbf{400\ W}}$$

Chapter 11, Solution 30.

$$v(t) = \begin{cases} t & 0 < t < 2 \\ -1 & 2 < t < 4 \end{cases}$$

$$V_{rms}^2 = \frac{1}{4}\left[\int_0^2 t^2\ dt + \int_2^4 (-1)^2\ dt\right] = \frac{1}{4}\left[\frac{8}{3} + 2\right] = 1.1667$$

$$V_{rms} = \underline{\mathbf{1.08\ V}}$$

Chapter 11, Solution 31.

$$V^2{}_{rms} = \frac{1}{2}\int_0^2 v(t)dt = \frac{1}{2}\left[\int_0^1 (2t)^2\,dt + \int_1^2 (-4)^2\,dt\right] = \frac{1}{2}\left[\frac{4}{3} + 16\right] = 8.6667$$

$$V_{rms} = \underline{2.944\ \text{V}}$$

Chapter 11, Solution 32.

$$I_{rms}^2 = \frac{1}{2}\left[\int_0^1 (10t^2)^2\ dt + \int_1^2 0\ dt\right]$$

$$I_{rms}^2 = 50\int_0^1 t^4\ dt = 50 \cdot \frac{t^5}{5}\Big|_0^1 = 10$$

$$I_{rms} = \underline{\textbf{3.162 A}}$$

Chapter 11, Solution 33.

$$i(t) = \begin{cases} 10 & 0 < t < 1 \\ 20 - 10t & 1 < t < 2 \\ 0 & 2 < t < 3 \end{cases}$$

$$I_{rms}^2 = \frac{1}{3}\left[\int_0^1 10^2\ dt + \int_1^2 (20-10t)^2\ dt + 0\right]$$

$$3I_{rms}^2 = 100 + 100\int_1^2 (4 - 4t + t^2)\ dt = 100 + (100)(1/3) = 133.33$$

$$I_{rms} = \sqrt{\frac{133.33}{3}} = \underline{\textbf{6.667 A}}$$

Chapter 11, Solution 34.

$$f_{rms}^2 = \frac{1}{T}\int_0^T f^2(t)dt = \frac{1}{3}\left[\int_0^2 (3t)^2 dt + \int_2^3 6^2\, dt\right]$$

$$= \frac{1}{3}\left[\frac{9t^3}{3}\Bigg|_0^2 + 36\right] = 20$$

$$f_{rms} = \sqrt{20} = \underline{4.472}$$

Chapter 11, Solution 35.

$$V_{rms}^2 = \frac{1}{6}\left[\int_0^1 10^2\ dt + \int_1^2 20^2\ dt + \int_2^4 30^2\ dt + \int_4^5 20^2\ dt + \int_5^6 10^2\ dt\right]$$

$$V_{rms}^2 = \frac{1}{6}[100 + 400 + 1800 + 400 + 100] = 466.67$$

$$V_{rms} = \underline{\mathbf{21.6\ V}}$$

Chapter 11, Solution 36.

(a) $I_{rms} = \underline{10\ A}$

(b) $V^2{}_{rms} = 4^2 + \left(\frac{3}{\sqrt{2}}\right)^2 \longrightarrow V_{rms} = \sqrt{16 + \frac{9}{2}} = \underline{4.528\ V}$ (checked)

(c) $I_{rms} = \sqrt{64 + \frac{36}{2}} = \underline{9.055\ A}$

(d) $V_{rms} = \sqrt{\frac{25}{2} + \frac{16}{2}} = \underline{4.528\ V}$

Chapter 11, Solution 37.

$$i = i_1 + i_2 + i_3 = 8 + 4\sin(t + 10^o) + 6\cos(2t + 30^o)$$

$$I_{rms} = \sqrt{I^2{}_{1rms} + I^2{}_{2rms} + I^2{}_{3rms}} = \sqrt{64 + \frac{16}{2} + \frac{36}{2}} = \sqrt{90} = \underline{9.487\ A}$$

Chapter 11, Solution 38.

$$0.5\ H \longrightarrow j\omega L = j(2\pi)(50)(0.5) = j157.08$$

$$\mathbf{Z} = R + jX_L = 30 + j157.08$$

$$\mathbf{S} = \frac{|\mathbf{V}|^2}{\mathbf{Z}^*} = \frac{(210)^2}{30 - j157.08}$$

$$\text{Apparent power} = |\mathbf{S}| = \frac{(210)^2}{160} = \underline{275.6 \text{ VA}}$$

$$\text{pf} = \cos\theta = \cos\left(\tan^{-1}\left(\frac{157.08}{36}\right)\right) = \cos(79.19°)$$

$$\text{pf} = \underline{\mathbf{0.1876 \quad (lagging)}}$$

Chapter 11, Solution 39.

$$\mathbf{Z}_T = j4 \,||\, (12 - j8) = \frac{(j4)(12 - j8)}{12 - j4}$$

$$\mathbf{Z}_T = 0.4(3 + j11) = 4.56\angle 74.74°$$

$$\text{pf} = \cos(74.74°) = \underline{\mathbf{0.2631}}$$

Chapter 11, Solution 40.

At node 1,

$$\frac{120\angle 30^o - V_1}{20} = \frac{V_1}{j30} + \frac{V_1 - V_2}{50} \longrightarrow$$

$$103.92 + j60 = V_1(1.4 - j0.6667) - 0.4V_2 \qquad (1)$$

At node 2,

$$\frac{V_1 - V_2}{50} = \frac{V_2}{10} + \frac{V_2}{-j40} \longrightarrow 0 = -V_1 + (6 + j1.25)V_2 \qquad (2)$$

Solving (1) and (2) leads to

$$\mathbf{V}_1 = 45.045 + j66.935, \quad \mathbf{V}_2 = 9.423 + j9.193$$

(a) $\underline{P_{j30\Omega} = 0 = P_{-j40\Omega}}$

$$P_{10\Omega} = \frac{V^2_{rms}}{R} = \frac{1}{2}\frac{|V_2|^2}{R} = 173.3/20 = \underline{8.665\ \text{W}}$$

$$P_{50\Omega} = \frac{1}{2}\frac{|V_1 - V_2|^2}{R} = 4603.1/100 = \underline{46.03\ \text{W}}$$

$$P_{20\Omega} = \frac{1}{2}\frac{|120\angle 30^o - V_1|^2}{R} = 3514/40 = \underline{87.86\ \text{W}}$$

(b) $I = \dfrac{120\angle 30^o - V_1}{20} = 2.944 - j0.3467, \qquad V_s = 120\angle 30^o = 103.92 + j60$

$$\overline{S} = \frac{1}{2}V_s I^\bullet = 142.5 - j106.3, \qquad S = |\overline{S}| = \underline{177.8\ \text{VA}}$$

(c) pf = 142.5/177.8 = **<u>0.8015 (leading).</u>**

Chapter 11, Solution 41.

(a) $\text{-}\,j2 \,||\, (j5 - j2) = \text{-}j2 \,||\, \text{-}j3 = \dfrac{(\text{-}j2)(\text{-}j3)}{j} = \text{-}j6$

$\mathbf{Z}_T = 4 - j6 = 7.211\angle\text{-}56.31°$

pf $= \cos(\text{-}56.31°) = \underline{\mathbf{0.5547 \quad (leading)}}$

(b) $j2 \,||\, (4 + j) = \dfrac{(j2)(4 + j)}{4 + j3} = 0.64 + j1.52$

$\mathbf{Z} = 1 \,||\, (0.64 + j1.52 - j) = \dfrac{0.64 + j0.44}{1.64 + j0.44} = 0.4793\angle 21.5°$

pf $= \cos(21.5°) = \underline{\mathbf{0.9304 \quad (lagging)}}$

Chapter 11, Solution 42.

$$pf = 0.86 = \cos\theta \longrightarrow \theta = 30.683^\circ$$

$$Q = S\sin\theta \longrightarrow S = \frac{Q}{\sin\theta} = \frac{5}{\sin(30.683^\circ)} = 9.798 \text{ kVA}$$

$$\mathbf{S} = \mathbf{V}\,\mathbf{I}^* \longrightarrow \mathbf{I}^* = \frac{\mathbf{S}}{\mathbf{V}} = \frac{9.798\times10^3\angle 30.683^\circ}{220} = 44.536\angle 30.683^\circ$$

$$\text{Peak current} = \sqrt{2}\times 44.536 = \underline{\mathbf{62.98\ A}}$$

$$\text{Apparent power} = S = \underline{\mathbf{9.798\ kVA}}$$

Chapter 11, Solution 43.

(a) $V_{rms} = \sqrt{V^2{}_{1rms} + V^2{}_{2rms} + V^2{}_{3rms}} = \sqrt{25 + \frac{9}{2} + \frac{1}{2}} = \sqrt{30} = \underline{5.477\text{ V}}$

(b) $P = \frac{V^2{}_{rms}}{R} = 30/10 = \underline{3\text{ W}}$

Chapter 11, Solution 44.

$$pf = 0.65 = \cos\theta \longrightarrow \theta = 49.46^o$$

$$\overline{S} = S(\cos\theta + j\sin\theta) = 50(0.65 + j0.7599) = 32.5 + j38 \quad \text{kVA}$$

Thus,

<u>Average power = 32.5 kW, Reactive power = 38 kVAR</u>

Chapter 11, Solution 45.

(a) $V^2_{rms} = 20^2 + \dfrac{60^2}{2} = 2200 \quad \longrightarrow \quad V_{rms} = \underline{46.9\text{ V}}$

$$I_{rms} = \sqrt{1^2 + \frac{0.5^2}{2}} = \sqrt{1.125} = \underline{1.061 A}$$

(b) $P = V_{rms} I_{rms} = \underline{49.74\text{ W}}$

Chapter 11, Solution 46.

(a) $\mathbf{S} = \mathbf{V}\,\mathbf{I}^* = (220\angle 30°)(0.5\angle -60°) = 110\angle -30°$
$\mathbf{S} = \underline{\mathbf{95.26 - j55\ VA}}$

Apparent power = $\underline{\mathbf{110\ VA}}$
Real power = $\underline{\mathbf{95.26\ W}}$
Reactive power = $\underline{\mathbf{55\ VAR}}$
pf is **leading** because current leads voltage

(b) $\mathbf{S} = \mathbf{V}\,\mathbf{I}^* = (250\angle -10°)(6.2\angle 25°) = 1550\angle 15°$
$\mathbf{S} = \underline{\mathbf{1497.2 + j401.2\ VA}}$

Apparent power = $\underline{\mathbf{1550\ VA}}$
Real power = $\underline{\mathbf{1497.2\ W}}$
Reactive power = $\underline{\mathbf{401.2\ VAR}}$
pf is **lagging** because current lags voltage

(c) $\mathbf{S} = \mathbf{V}\,\mathbf{I}^* = (120\angle 0°)(2.4\angle 15°) = 288\angle 15°$
$\mathbf{S} = \underline{\mathbf{278.2 + j74.54\ VA}}$

Apparent power = $\underline{\mathbf{288\ VA}}$
Real power = $\underline{\mathbf{278.2\ W}}$
Reactive power = $\underline{\mathbf{74.54\ VAR}}$
pf is **lagging** because current lags voltage

(d) $\mathbf{S} = \mathbf{V}\mathbf{I}^* = (160\angle 45°)(8.5\angle -180°) = 1360\angle -135°$

$\mathbf{S} = \underline{\mathbf{-961.7 - j961.7\ VA}}$

Apparent power = **1360 VA**

Real power = **- 961.7 W**

Reactive power = **- 961.7 VAR**

pf is **leading** because current leads voltage

Chapter 11, Solution 47.

(a) $\mathbf{V} = 112\angle 10°, \qquad \mathbf{I} = 4\angle -50°$

$\mathbf{S} = \frac{1}{2}\mathbf{V}\mathbf{I}^* = 224\angle 60° = \underline{\mathbf{112 + j194\ VA}}$

Average power = **112 W**

Reactive power = **194 VAR**

(b) $\mathbf{V} = 160\angle 0°, \qquad \mathbf{I} = 25\angle 45°$

$\mathbf{S} = \frac{1}{2}\mathbf{V}\mathbf{I}^* = 200\angle -45° = \underline{\mathbf{141.42 - j141.42\ VA}}$

Average power = **141.42 W**

Reactive power = **- 141.42 VAR**

(c) $\mathbf{S} = \frac{|\mathbf{V}|^2}{\mathbf{Z}^*} = \frac{(80)^2}{50\angle -30°} = 128\angle 30° = \underline{\mathbf{90.51 + j64\ VA}}$

Average power = **90.51 W**

Reactive power = **64 VAR**

(d) $\mathbf{S} = |\mathbf{I}|^2\mathbf{Z} = (100)(100\angle 45°) = \underline{\mathbf{7.071 + j7.071\ kVA}}$

Average power = **7.071 kW**

Reactive power = **7.071 kVAR**

Chapter 11, Solution 48.

(a) $\mathbf{S} = P - jQ = \underline{\mathbf{269 - j150\ VA}}$

(b) $\text{pf} = \cos\theta = 0.9 \longrightarrow \theta = 25.84°$

$$Q = S\sin\theta \longrightarrow S = \frac{Q}{\sin\theta} = \frac{2000}{\sin(25.84°)} = 4588.31$$

$$P = S\cos\theta = 4129.48$$

$\mathbf{S} = \underline{\mathbf{4129 - j2000\ VA}}$

(c) $Q = S\sin\theta \longrightarrow \sin\theta = \dfrac{Q}{S} = \dfrac{450}{600} = 0.75$

$\theta = 48.59$, $\quad$ $\text{pf} = 0.6614$

$$P = S\cos\theta = (600)(0.6614) = 396.86$$

$\mathbf{S} = \underline{\mathbf{396.9 + j450\ VA}}$

(d) $S = \dfrac{|\mathbf{V}|^2}{|\mathbf{Z}|} = \dfrac{(220)^2}{40} = 1210$

$$P = S\cos\theta \longrightarrow \cos\theta = \frac{P}{S} = \frac{1000}{1210} = 0.8264$$

$$\theta = 34.26°$$

$$Q = S\sin\theta = 681.25$$

$\mathbf{S} = \underline{\mathbf{1000 + j681.2\ VA}}$

Chapter 11, Solution 49.

(a) $\mathbf{S} = 4 + j\dfrac{4}{0.86}\sin(\cos^{-1}(0.86))\ \text{kVA}$

$\mathbf{S} = \underline{\mathbf{4 + j2.373\ kVA}}$

(b) $\quad pf = \frac{P}{S} = \frac{1.6}{2} 0.8 = \cos\theta \longrightarrow \sin\theta = 0.6$

$\mathbf{S} = 1.6 - j2\sin\theta = \underline{\mathbf{1.6 - j1.2\ kVA}}$

(c) $\quad \mathbf{S} = \mathbf{V}_{rms}\,\mathbf{I}^*_{rms} = (208\angle 20°)(6.5\angle 50°)\ \text{VA}$

$\mathbf{S} = 1.352\angle 70° = \underline{\mathbf{0.4624 + j1.2705\ kVA}}$

(d) $\quad \mathbf{S} = \frac{|\mathbf{V}|^2}{\mathbf{Z}^*} = \frac{(120)^2}{40 - j60} = \frac{14400}{72.11\angle -56.31°}$

$\mathbf{S} = 199.7\angle 56.31° = \underline{\mathbf{110.77 + j166.16\ VA}}$

Chapter 11, Solution 50.

(a) $\quad \mathbf{S} = P - jQ = 1000 - j\frac{1000}{0.8}\sin(\cos^{-1}(0.8))$

$\mathbf{S} = 1000 - j750$

But, $\quad \mathbf{S} = \frac{|\mathbf{V}_{rms}|^2}{\mathbf{Z}^*}$

$$\mathbf{Z}^* = \frac{|\mathbf{V}_{rms}|^2}{\mathbf{S}} = \frac{(220)^2}{1000 - j750} = 30.98 + j23.23$$

$\mathbf{Z} = \underline{\mathbf{30.98 - j23.23\ \Omega}}$

(b) $\quad \mathbf{S} = |\mathbf{I}_{rms}|^2\,\mathbf{Z}$

$$\mathbf{Z} = \frac{\mathbf{S}}{|\mathbf{I}_{rms}|^2} = \frac{1500 + j2000}{(12)^2} = \underline{\mathbf{10.42 + j13.89\ \Omega}}$$

(c) $\quad \mathbf{Z}^* = \frac{|\mathbf{V}_{rms}|^2}{\mathbf{S}} = \frac{|\mathbf{V}|^2}{2\mathbf{S}} = \frac{(120)^2}{(2)(4500\angle 60°)} = 1.6\angle -60°$

$\mathbf{Z} = 1.6\angle 60° = \underline{\mathbf{0.8 + j1.386\ \Omega}}$

Chapter 11, Solution 51.

(a) $\mathbf{Z}_T = 2 + (10 - j5) \,||\, (8 + j6)$

$$\mathbf{Z}_T = 2 + \frac{(10 - j5)(8 + j6)}{18 + j} = 2 + \frac{110 + j20}{18 + j}$$

$$\mathbf{Z}_T = 8.152 + j0.768 = 8.188\angle 5.382°$$

$$\text{pf} = \cos(5.382°) = \underline{\mathbf{0.9956 \quad (lagging)}}$$

(b) $$\mathbf{S} = \frac{1}{2}\mathbf{V}\,\mathbf{I}^* = \frac{|\mathbf{V}|^2}{2\mathbf{Z}^*} = \frac{(16)^2}{(2)(8.188\angle -5.382°)}$$

$$\mathbf{S} = 15.63\angle 5.382°$$

$$P = S\cos\theta = \underline{\mathbf{15.56\ W}}$$

(c) $Q = S\sin\theta = \underline{\mathbf{1.466\ VAR}}$

(d) $S = |\mathbf{S}| = \underline{\mathbf{15.63\ VA}}$

(e) $\mathbf{S} = 15.63\angle 5.382° = \underline{\mathbf{15.56 + j1.466\ VA}}$

Chapter 11, Solution 52.

$$S_A = 2000 + j\frac{2000}{0.8}0.6 = 2000 + j1500$$
$$S_B = 3000x0.4 - j3000x0.9165 = 1200 - j2749$$
$$S_C = 1000 + j500$$
$$S = S_A + S_B + S_C = 4200 - j749$$

(a) $$\text{pf} = \frac{4200}{\sqrt{4200^2 + 749^2}} = \underline{0.9845 \text{ leading.}}$$

(b) $$S = V_{rms}I_{rms}^* \longrightarrow I_{rms}^* = \frac{4200 - j749}{120\angle 45°} = 35.55\angle -55.11°$$

$I_{rms} = \underline{\mathbf{35.55\angle{-55.11}°\ A}}$.

Chapter 11, Solution 53.

$$S = S_A + S_B + S_C = 4000(0.8\text{–}j0.6) + 2400(0.6+j0.8) + 1000 + j500$$

$$= 5640 + j20 = 5640\angle 0.2^\circ$$

(a)

$$I^*_{rms} = \frac{S_B}{V_{rms}} + \frac{S_A + S_C}{V_{rms}} = \frac{S}{V_{rms}} = \frac{5640\angle 0.2^\circ}{\dfrac{120\angle 30^\circ}{\sqrt{2}}} = 66.46\angle -29.8^\circ$$

$$I = \sqrt{2}\text{x}66.46\angle 29.88^\circ = \underline{93.97\angle 29.8^\circ\,\text{A}}$$

(b) $\text{pf} = \cos(0.2^\circ) \approx$ **<u>1.0 lagging</u>**.

Chapter 11, Solution 54.

(a)

$$\mathbf{S} = \text{P} - \text{jQ} = 1000 - \text{j}\frac{1000}{0.8}\sin(\cos^{-1}(0.8))$$

$$\mathbf{S} = 1000 - \text{j}750$$

But, $\mathbf{S} = \dfrac{|\mathbf{V}_{rms}|^2}{\mathbf{Z}^*}$

$$\mathbf{Z}^* = \frac{|\mathbf{V}_{rms}|^2}{\mathbf{S}} = \frac{(220)^2}{1000 - \text{j}750} = 30.98 + \text{j}23.23$$

$$\mathbf{Z} = \underline{\mathbf{30.98 - j23.23\,\Omega}}$$

(b)

$$\mathbf{S} = |\mathbf{I}_{rms}|^2\,\mathbf{Z}$$

$$\mathbf{Z} = \frac{\mathbf{S}}{|\mathbf{I}_{rms}|^2} = \frac{1500 + \text{j}2000}{(12)^2} = \underline{\mathbf{10.42 + j13.89\,\Omega}}$$

(c)

$$\mathbf{Z}^* = \frac{|\mathbf{V}_{rms}|^2}{\mathbf{S}} = \frac{|\mathbf{V}|^2}{2\mathbf{S}} = \frac{(120)^2}{(2)(4500\angle 60^\circ)} = 1.6\angle\text{-}60^\circ$$

$$\mathbf{Z} = 1.6\angle 60^\circ = \underline{\mathbf{0.8 + j1.386\,\Omega}}$$

Chapter 11, Solution 55.

We apply mesh analysis to the following circuit.

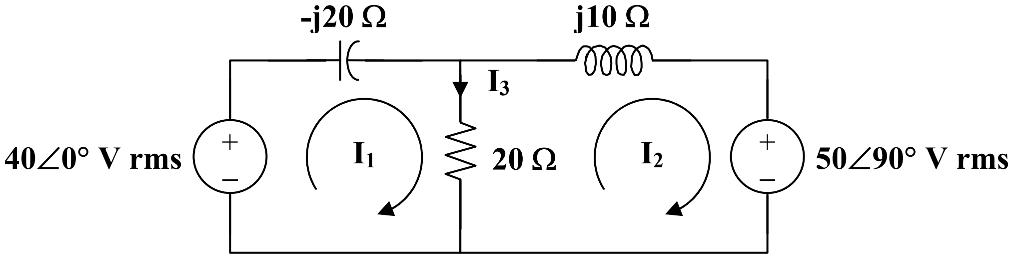

For mesh 1, $40 = (20 - j20)\,I_1 - 20\,I_2$

$2 = (1 - j)\,I_1 - I_2$ (1)

For mesh 2, $-j50 = (20 + j10)\,I_2 - 20\,I_1$

$-j5 = -2\,I_1 + (2 + j)\,I_2$ (2)

Putting (1) and (2) in matrix form,

$$\begin{bmatrix} 2 \\ -j5 \end{bmatrix} = \begin{bmatrix} 1-j & -1 \\ -2 & 2+j \end{bmatrix} \begin{bmatrix} I_1 \\ I_2 \end{bmatrix}$$

$\Delta = 1 - j$, $\quad \Delta_1 = 4 - j3$, $\quad \Delta_2 = -1 - j5$

$$I_1 = \frac{\Delta_1}{\Delta} = \frac{4 - j3}{1 - j} = \frac{1}{2}(7 - j) = 3.535\angle 8.13°$$

$$I_2 = \frac{\Delta_2}{\Delta} = \frac{-1 - j5}{1 - j} = 2 - j3 = 3.605\angle -56.31°$$

$$I_3 = I_1 - I_2 = (3.5 + j0.5) - (2 - j3) = 1.5 + j3.5 = 3.808\angle 66.8°$$

For the 40-V source,

$$\mathbf{S} = -\mathbf{V}\,\mathbf{I}_1^* = -(40)\left(\frac{1}{2}\cdot(7 - j)\right) = \underline{\mathbf{-140 + j20\ VA}}$$

For the capacitor,

$$\mathbf{S} = \left|\mathbf{I}_1\right|^2 \mathbf{Z}_c = \underline{\mathbf{-j250\ VA}}$$

For the resistor,

$$\mathbf{S} = \left|\mathbf{I}_3\right|^2 R = \underline{\mathbf{290\ VA}}$$

For the inductor,

$$\mathbf{S} = \left|\mathbf{I}_2\right|^2 \mathbf{Z}_L = \underline{\mathbf{j130\ VA}}$$

For the j50-V source,

$$\mathbf{S} = \mathbf{V}\,\mathbf{I}_2^* = (j50)(2 + j3) = \underline{\mathbf{-150 + j100\ VA}}$$

Chapter 11, Solution 56.

$$-j2 \,||\, 6 = \frac{(6)(-j2)}{6 - j2} = 0.6 - j1.8$$

$$3 + j4 + (-j2) \,||\, 6 = 3.6 + j2.2$$

The circuit is reduced to that shown below.

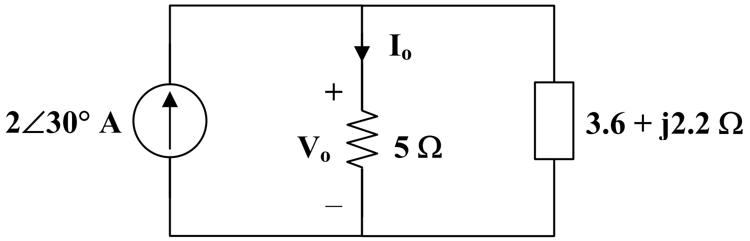

$$\mathbf{I}_o = \frac{3.6 + j2.2}{8.6 + j2.2}(2\angle 30°) = 0.95\angle 47.08°$$

$$\mathbf{V}_o = 5\mathbf{I}_o = 4.75\angle 47.08°$$

$$\mathbf{S} = \frac{1}{2}\mathbf{V}_o\,\mathbf{I}_s^* = \frac{1}{2}\cdot(4.75\angle 47.08°)(2\angle -30°)$$

$$\mathbf{S} = 4.75\angle 17.08° = \underline{\mathbf{4.543 + j1.396\ VA}}$$

Chapter 11, Solution 57.

Consider the circuit as shown below.

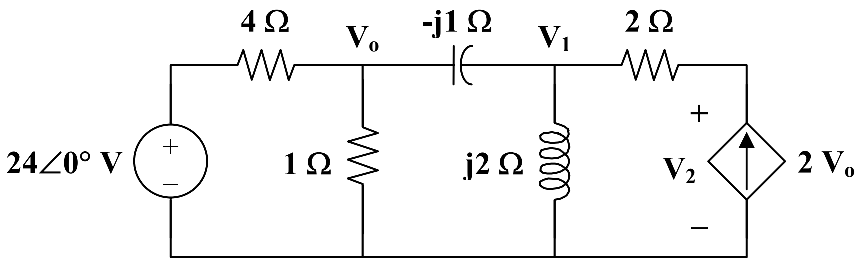

At node o,

$$\frac{24 - \mathbf{V}_o}{4} = \frac{\mathbf{V}_o}{1} + \frac{\mathbf{V}_o - \mathbf{V}_1}{-j}$$

$$24 = (5 + j4)\mathbf{V}_o - j4\mathbf{V}_1 \qquad (1)$$

At node 1, $\dfrac{\mathbf{V}_o - \mathbf{V}_1}{-j} + 2\mathbf{V}_o = \dfrac{\mathbf{V}_1}{j2}$

$$\mathbf{V}_1 = (2 - j4)\mathbf{V}_o \qquad (2)$$

Substituting (2) into (1),

$$24 = (5 + j4 - j8 - 16)\mathbf{V}_o$$

$$\mathbf{V}_o = \frac{-24}{11 + j4}, \qquad \mathbf{V}_1 = \frac{(-24)(2 - j4)}{11 + j4}$$

The voltage across the dependent source is

$$\mathbf{V}_2 = \mathbf{V}_1 + (2)(2\mathbf{V}_o) = \mathbf{V}_1 + 4\mathbf{V}_o$$

$$\mathbf{V}_2 = \frac{-24}{11 + j4} \cdot (2 - j4 + 4) = \frac{(-24)(6 - j4)}{11 + j4}$$

$$\mathbf{S} = \frac{1}{2}\mathbf{V}_2\mathbf{I}^* = \frac{1}{2}\mathbf{V}_2(2\mathbf{V}_o^*)$$

$$\mathbf{S} = \frac{(-24)(6 - j4)}{11 + j4} \cdot \frac{-24}{11 - j4} = \left(\frac{576}{137}\right)(6 - j4)$$

$$\mathbf{S} = \underline{\mathbf{25.23 - j16.82\ VA}}$$

Chapter 11, Solution 58.

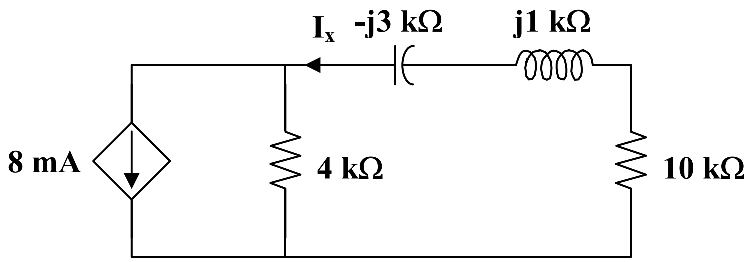

From the left portion of the circuit,

$$\mathbf{I}_o = \frac{0.2}{500} = 0.4 \text{ mA}$$

$$20\mathbf{I}_o = 8 \text{ mA}$$

From the right portion of the circuit,

$$\mathbf{I}_x = \frac{4}{4 + 10 + j - j3}(8\text{ mA}) = \frac{16}{7 - j}\text{ mA}$$

$$\mathbf{S} = \left|\mathbf{I}_x\right|^2 R = \frac{(16 \times 10^{-3})^2}{50} \cdot (10 \times 10^3)$$

$$\mathbf{S} = \underline{\mathbf{51.2\ mVA}}$$

Chapter 11, Solution 59.

Consider the circuit below.

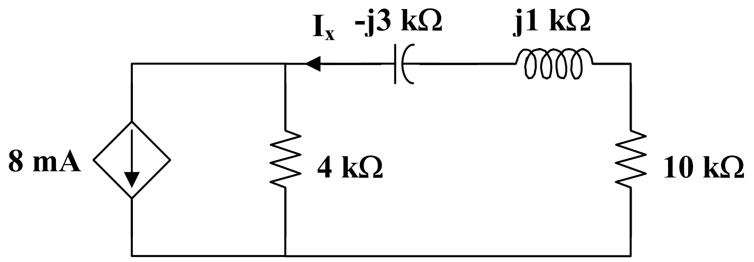

$$4 + \frac{240 - \mathbf{V}_o}{50} = \frac{\mathbf{V}_o}{-j20} + \frac{\mathbf{V}_o}{40 + j30}$$

$$88 = (0.36 + j0.38)\,\mathbf{V}_o$$

$$\mathbf{V}_o = \frac{88}{0.36 + j0.38} = 168.13\angle -46.55°$$

$$\mathbf{I}_1 = \frac{\mathbf{V}_o}{-j20} = 8.41\angle 43.45°$$

$$\mathbf{I}_2 = \frac{\mathbf{V}_o}{40 + j30} = 3.363\angle -83.42°$$

Reactive power in the inductor is

$$\mathbf{S} = \frac{1}{2}\left|\mathbf{I}_2\right|^2 \mathbf{Z}_L = \frac{1}{2} \cdot (3.363)^2 (j30) = \underline{\mathbf{j169.65\ VAR}}$$

Reactive power in the capacitor is

$$\mathbf{S} = \frac{1}{2}\left|\mathbf{I}_1\right|^2 \mathbf{Z}_c = \frac{1}{2} \cdot (8.41)^2 (-j20) = \underline{\mathbf{-\ j707.3\ VAR}}$$

Chapter 11, Solution 60.

$$S_1 = 20 + j\frac{20}{0.8}\sin(\cos^{-1}(0.8)) = 20 + j15$$

$$S_2 = 16 + j\frac{16}{0.9}\sin(\cos^{-1}(0.9)) = 16 + j7.749$$

$$S = S_1 + S_2 = 36 + j22.749 = 42.585\angle 32.29°$$

But $\quad S = V_o I^* = 6V_o$

$$V_o = \frac{S}{6} = \underline{\mathbf{7.098\angle 32.29°}}$$

$$pf = \cos(32.29°) = \underline{\mathbf{0.8454 \quad (lagging)}}$$

Chapter 11, Solution 61.

Consider the network shown below.

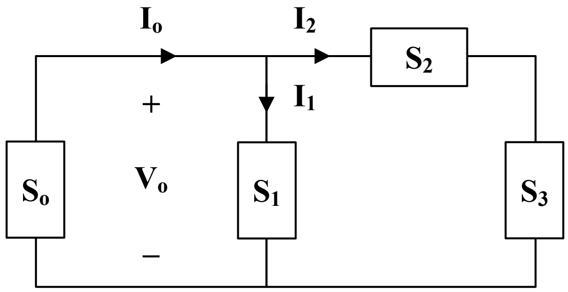

$$\mathbf{S}_2 = 1.2 - j0.8 \text{ kVA}$$

$$\mathbf{S}_3 = 4 + j\frac{4}{0.9}\sin(\cos^{-1}(0.9)) = 4 + j1.937 \text{ kVA}$$

Let $\quad \mathbf{S}_4 = \mathbf{S}_2 + \mathbf{S}_3 = 5.2 + j1.137 \text{ kVA}$

But $\quad \mathbf{S}_4 = \frac{1}{2}\mathbf{V}_o \mathbf{I}_2^*$

$$\mathbf{I}_2^* = \frac{2\mathbf{S}_4}{\mathbf{V}_o} = \frac{(2)(5.2 + j1.137)\times 10^3}{100\angle 90°} = 22.74 - j104$$

$$\mathbf{I}_2 = 22.74 + j104$$

Similarly, $\mathbf{S}_1 = 2 - j\frac{2}{0.707}\sin(\cos^{-1}(0.707)) = 2 - j2 \text{ kVA}$

But $\mathbf{S}_1 = \frac{1}{2}\mathbf{V}_o\,\mathbf{I}_1^*$

$$\mathbf{I}_1^* = \frac{2\mathbf{S}_1}{V_o} = \frac{(4 - j4)\times 10^3}{j100} = -40 - j40$$

$$\mathbf{I}_1 = -40 + j40$$

$$\mathbf{I}_o = \mathbf{I}_1 + \mathbf{I}_2 = -17.26 + j144 = 145\angle 96.83°$$

$$\mathbf{S}_o = \frac{1}{2}V_o I_o^*$$

$$\mathbf{S}_o = \frac{1}{2}\cdot(100\angle 90°)(145\angle -96.83°) \text{ VA}$$

$$\mathbf{S}_o = \underline{\mathbf{7.2 - j0.862\ kVA}}$$

Chapter 11, Solution 62.

Consider the circuit below

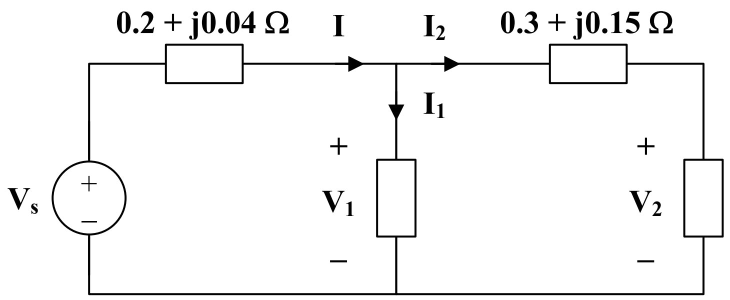

$$\mathbf{S}_2 = 15 - j\frac{15}{0.8}\sin(\cos^{-1}(0.8)) = 15 - j11.25$$

But $\mathbf{S}_2 = \mathbf{V}_2\,\mathbf{I}_2^*$

$$\mathbf{I}_2^* = \frac{\mathbf{S}_2}{\mathbf{V}_2} = \frac{15 - j11.25}{120}$$

$$\mathbf{I}_2 = 0.125 + j0.09375$$
$$\mathbf{V}_1 = \mathbf{V}_2 + \mathbf{I}_2\,(0.3 + j0.15)$$
$$\mathbf{V}_1 = 120 + (0.125 + j0.09375)(0.3 + j0.15)$$
$$\mathbf{V}_1 = 120.02 + j0.0469$$

$$\mathbf{S}_1 = 10 + j\frac{10}{0.9}\sin(\cos^{-1}(0.9)) = 10 + j4.843$$

But $\mathbf{S}_1 = \mathbf{V}_1\,\mathbf{I}_1^*$

$$\mathbf{I}_1^* = \frac{\mathbf{S}_1}{\mathbf{V}_1} = \frac{11.111\angle 25.84°}{120.02\angle 0.02°}$$

$$\mathbf{I}_1 = 0.093\angle -25.82° = 0.0837 - j0.0405$$
$$\mathbf{I} = \mathbf{I}_1 + \mathbf{I}_2 = 0.2087 + j0.053$$
$$\mathbf{V}_s = \mathbf{V}_1 + \mathbf{I}\,(0.2 + j0.04)$$
$$\mathbf{V}_s = (120.02 + j0.0469) + (0.2087 + j0.053)(0.2 + j0.04)$$
$$\mathbf{V}_s = 120.06 + j0.0658$$
$$\mathbf{V}_s = \underline{\mathbf{120.06\angle 0.03°\ V}}$$

Chapter 11, Solution 63.

Let $\mathbf{S} = \mathbf{S}_1 + \mathbf{S}_2 + \mathbf{S}_3$.

$$\mathbf{S}_1 = 12 - j\frac{12}{0.866}\sin(\cos^{-1}(0.866)) = 12 - j6.929$$

$$\mathbf{S}_2 = 16 + j\frac{16}{0.85}\sin(\cos^{-1}(0.85)) = 16 + j9.916$$

$$\mathbf{S}_3 = \frac{(20)(0.6)}{\sin(\cos^{-1}(0.6)} + j20 = 15 + j20$$

$$\mathbf{S} = 43 + j22.987 = \frac{1}{2}\mathbf{V}\,\mathbf{I}_o^*$$

$$\mathbf{I}_o^* = \frac{2\mathbf{S}}{\mathbf{V}} = \frac{44 + j22.98}{110}$$

$$\mathbf{I}_o = \underline{\mathbf{0.4513\angle\text{-}27.58°\ A}}$$

Chapter 11, Solution 64.

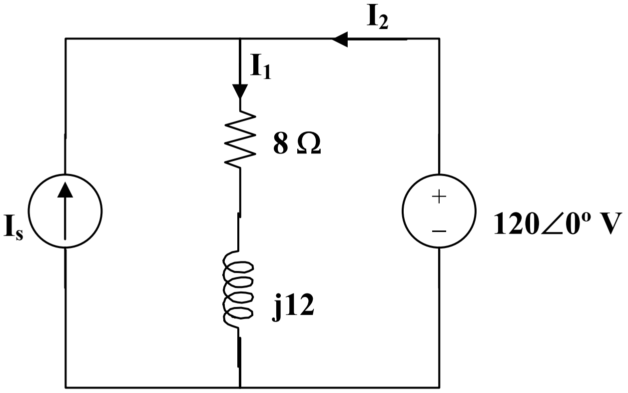

$I_s + I_2 = I_1$ or $I_s = I_1 - I_2$

$$I_1 = \frac{120}{8 + j12} = 4.615 - j6.923$$

But, $S = VI_2^* \longrightarrow I_2^* = \dfrac{S}{V} = \dfrac{2500 - j400}{120} = 20.83 - j3.333$

or $I_2 = 20.83 + j3.333$

$I_s = I_1 - I_2 = -16.22 - j10.256 = \underline{\mathbf{19.19\angle{-147.69}^\circ\ A}}$.

Chapter 11, Solution 65.

$$C = 1\text{ nF} \longrightarrow \frac{1}{j\omega C} = \frac{-j}{10^4 \times 10^{-9}} = -j100\text{ k}\Omega$$

At the noninverting terminal,

$$\frac{4\angle 0° - \mathbf{V}_o}{100} = \frac{\mathbf{V}_o}{-j100} \longrightarrow \mathbf{V}_o = \frac{4}{1+j}$$

$$\mathbf{V}_o = \frac{4}{\sqrt{2}}\angle -45°$$

$$v_o(t) = \frac{4}{\sqrt{2}}\cos(10^4 t - 45°)$$

$$P = \frac{V_{rms}^2}{R} = \left(\frac{4}{\sqrt{2}} \cdot \frac{1}{\sqrt{2}}\right)^2 \left(\frac{1}{50 \times 10^3}\right) \text{W}$$

P = **80 μW**

Chapter 11, Solution 66.

As an inverter,

$$\mathbf{V}_o = \frac{-\mathbf{Z}_f}{\mathbf{Z}_i}\mathbf{V}_s = \frac{-(2+j4)}{4+j3} \cdot (4\angle 45°)$$

$$\mathbf{I}_o = \frac{\mathbf{V}_o}{6-j2}\text{ mA} = \frac{-(2+j4)(4\angle 45°)}{(6-j2)(4+j3)}\text{ mA}$$

The power absorbed by the 6-kΩ resistor is

$$P = \frac{1}{2}\left|\mathbf{I}_o\right|^2 R = \frac{1}{2} \cdot \left(\frac{\sqrt{20} \times 4}{\sqrt{40 \times 5}}\right)^2 \times 10^{-6} \times 6 \times 10^3$$

P = **0.96 mW**

Chapter 11, Solution 67.

$$\omega = 2, \quad 3\text{H} \longrightarrow j\omega L = j6, \quad 0.1\text{F} \longrightarrow \frac{1}{j\omega C} = \frac{1}{j2x0.1} = -j5$$

$$10//(-j5) = \frac{-j50}{10-j5} = 2 - j4$$

The frequency-domain version of the circuit is shown below.

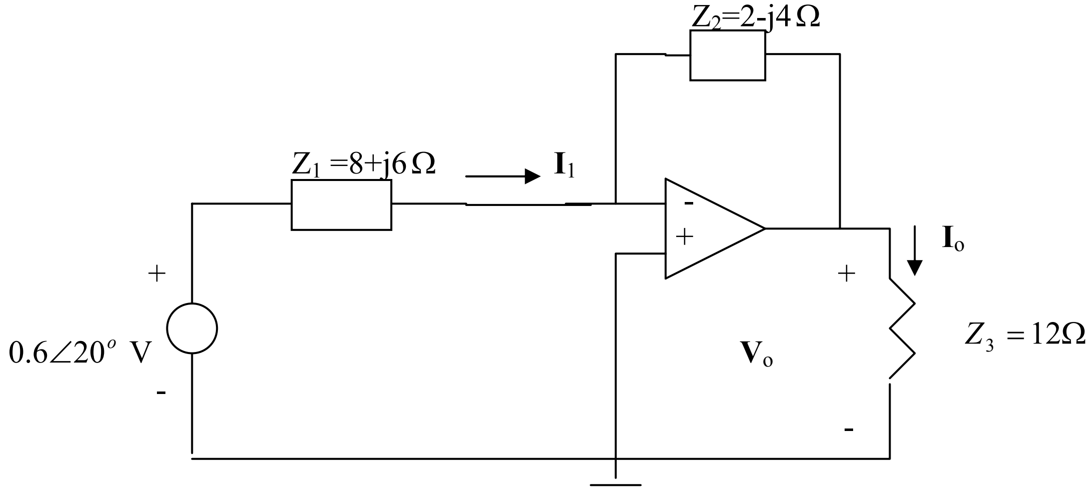

(a) $I_1 = \dfrac{0.6\angle 20^o - 0}{8+j6} = \dfrac{0.5638 + j0.2052}{8+j6} = 0.06\angle -16.87^o$

$$S = \frac{1}{2}V_s I^*_1 = (0.3\angle 20^o)(0.06\angle +16.87^o) = \underline{14.4 + j10.8\,\text{mVA}} = \underline{18\angle 36.86^o \text{ mVA}}$$

(b) $V_o = -\dfrac{Z_2}{Z_1}V_s, \qquad I_o = \dfrac{V_o}{Z_3} = -\dfrac{(2-j4)}{12(8+j6)}(0.6\angle 20^o) = 0.0224\angle 99.7^o$

$$P = \frac{1}{2}|I_o|^2 R = 0.5(0.0224)^2(12) = \underline{2.904\,\text{mW}}$$

Chapter 11, Solution 68.

Let $\mathbf{S} = \mathbf{S}_R + \mathbf{S}_L + \mathbf{S}_c$

where $\mathbf{S}_R = P_R + jQ_R = \frac{1}{2} I_o^2 R + j0$

$$\mathbf{S}_L = P_L + jQ_L = 0 + j\frac{1}{2} I_o^2 \omega L$$

$$\mathbf{S}_c = P_c + jQ_c = 0 - j\frac{1}{2} I_o^2 \cdot \frac{1}{\omega C}$$

Hence, $\underline{\mathbf{S} = \frac{1}{2} \mathbf{I}_o^2 \left[\mathbf{R} + \mathbf{j}\left(\omega \mathbf{L} - \frac{1}{\omega \mathbf{C}} \right) \right]}$

Chapter 11, Solution 69.

(a) Given that $\mathbf{Z} = 10 + j12$

$$\tan\theta = \frac{12}{10} \longrightarrow \theta = 50.19°$$

$$\text{pf} = \cos\theta = \underline{\mathbf{0.6402}}$$

(b) $\mathbf{S} = \frac{|\mathbf{V}|^2}{2\mathbf{Z}^*} = \frac{(120)^2}{(2)(10 - j12)} = 295.12 + j354.09$

The average power absorbed $= P = \text{Re}(\mathbf{S}) = \underline{\mathbf{295.1\ W}}$

(c) For unity power factor, $\theta_1 = 0°$, which implies that the reactive power due to the capacitor is $Q_c = 354.09$

But $Q_c = \frac{V^2}{2X_c} = \frac{1}{2}\omega C V^2$

$$C = \frac{2Q_c}{\omega V^2} = \frac{(2)(354.09)}{(2\pi)(60)(120)^2} = \underline{\mathbf{130.4\ \mu F}}$$

Chapter 11, Solution 70.

$$\text{pf} = \cos\theta = 0.8 \longrightarrow \qquad \sin\theta = 0.6$$
$$Q = S\sin\theta = (880)(0.6) = 528$$

If the power factor is to be unity, the reactive power due to the capacitor is

$$Q_c = Q = 528 \text{ VAR}$$

But $\quad Q = \dfrac{V_{rms}^2}{X_c} = \dfrac{1}{2}\omega C V^2 \longrightarrow C = \dfrac{2Q_c}{\omega V^2}$

$$C = \frac{(2)(528)}{(2\pi)(50)(220)^2} = \underline{\mathbf{69.45\ \mu F}}$$

Chapter 11, Solution 71.

$$P_1 = Q_1 = 150x0.7071 = 106.065, \quad Q_2 = 50, \quad S_2 = \frac{Q_2}{0.6}, \quad P_2 = 0.8S = 0.8\frac{50}{0.6} = 66.67$$

$$\overline{S}_1 = 106.065 + j106.065, \quad \overline{S}_2 = 66.67 - j50$$

$$\overline{S} = \overline{S}_1 + \overline{S}_2 = 172.735 + j56.06 = 181.6\angle 17.98^o, \quad pf = \cos 17.98^o = 0.9512$$

$$Q_c = P(\tan\theta_1 - \tan\theta_2) = 172.735(\tan 17.98^o - 0) = 56.058$$

$$C = \frac{Q_c}{\omega V^2{}_{rms}} = \frac{56.058}{2\pi x 60 x 120^2} = \underline{10.33\ \mu\text{F}}$$

Chapter 11, Solution 72.

(a) $\theta_1 = \cos^{-1}(0.76) = 40.54°$

$\theta_2 = \cos^{-1}(0.9) = 25.84°$

$$Q_c = P(\tan\theta_1 - \tan\theta_2)$$
$$Q_c = (40)[\tan(40.54°) - \tan(25.84°)] \text{ kVAR}$$
$$Q_c = 14.84 \text{ kVAR}$$

$$C = \frac{Q_c}{\omega V_{rms}^2} = \frac{14840}{(2\pi)(60)(120)^2} = \underline{\mathbf{2.734\ mF}}$$

(b) $\theta_1 = 40.54°$, $\theta_2 = 0°$

$Q_c = (40)[\tan(40.54°) - 0]\text{ kVAR} = 34.21\text{ kVAR}$

$$C = \frac{Q_c}{\omega V_{rms}^2}\frac{34210}{(2\pi)(60)(120)^2} = \underline{\mathbf{6.3\ mF}}$$

Chapter 11, Solution 73.

(a) $\mathbf{S} = 10 - j15 + j22 = 10 + j7\text{ kVA}$

$S = |\mathbf{S}| = \sqrt{10^2 + 7^2} = \underline{\mathbf{12.21\ kVA}}$

(b) $\mathbf{S} = \mathbf{V}\mathbf{I}^* \longrightarrow \mathbf{I}^* = \dfrac{\mathbf{S}}{\mathbf{V}} = \dfrac{10{,}000 + j7{,}000}{240}$

$\mathbf{I} = 41.667 - j29.167 = \underline{\mathbf{50.86\angle -35°\ A}}$

(c) $\theta_1 = \tan^{-1}\left(\dfrac{7}{10}\right) = 35°$, $\theta_2 = \cos^{-1}(0.96) = 16.26°$

$Q_c = P_1[\tan\theta_1 - \tan\theta_2] = 10[\tan(35°) - \tan(16.26°)]$
$Q_c = \underline{\mathbf{4.083\ kVAR}}$

$$C = \frac{Q_c}{\omega V_{rms}^2} = \frac{4083}{(2\pi)(60)(240)^2} = \underline{\mathbf{188.03\ \mu F}}$$

(d) $\mathbf{S}_2 = P_2 + jQ_2$, $P_2 = P_1 = 10\text{ kW}$

$Q_2 = Q_1 - Q_c = 7 - 4.083 = 2.917\text{ kVAR}$

$\mathbf{S}_2 = 10 + j2.917\text{ kVA}$
But $\mathbf{S}_2 = \mathbf{V}\mathbf{I}_2^*$

$$\mathbf{I}_2^* = \frac{\mathbf{S}_2}{\mathbf{V}} = \frac{10{,}000 + j2917}{240}$$

$\mathbf{I}_2 = 41.667 - j12.154 = \underline{\mathbf{43.4\angle -16.26°\ A}}$

Chapter 11, Solution 74.

(a) $\theta_1 = \cos^{-1}(0.8) = 36.87°$

$$S_1 = \frac{P_1}{\cos\theta_1} = \frac{24}{0.8} = 30 \text{ kVA}$$

$$Q_1 = S_1 \sin\theta_1 = (30)(0.6) = 18 \text{ kVAR}$$
$$\mathbf{S}_1 = 24 + j18 \text{ kVA}$$

$$\theta_2 = \cos^{-1}(0.95) = 18.19°$$

$$S_2 = \frac{P_2}{\cos\theta_2} = \frac{40}{0.95} = 42.105 \text{ kVA}$$

$$Q_2 = S_2 \sin\theta_2 = 13.144 \text{ kVAR}$$
$$\mathbf{S}_2 = 40 + j13.144 \text{ kVA}$$

$$\mathbf{S} = \mathbf{S}_1 + \mathbf{S}_2 = 64 + j31.144 \text{ kVA}$$

$$\theta = \tan^{-1}\left(\frac{31.144}{64}\right) = 25.95°$$

$$\text{pf} = \cos\theta = \underline{\mathbf{0.8992}}$$

(b) $\theta_2 = 25.95°, \qquad \theta_1 = 0°$

$$Q_c = P[\tan\theta_2 - \tan\theta_1] = 64[\tan(25.95°) - 0] = 31.144 \text{ kVAR}$$

$$C = \frac{Q_c}{\omega V_{rms}^2} = \frac{31{,}144}{(2\pi)(60)(120)^2} = \underline{\mathbf{5.74\ mF}}$$

Chapter 11, Solution 75.

(a) $$\mathbf{S}_1 = \frac{|\mathbf{V}|^2}{\mathbf{Z}_1^*} = \frac{(240)^2}{80 + j50} = \frac{5760}{8 + j5} = 517.75 - j323.59 \text{ VA}$$

$$\mathbf{S}_2 = \frac{(240)^2}{120 - j70} = \frac{5760}{12 - j7} = 358.13 + j208.91 \text{ VA}$$

$$\mathbf{S}_3 = \frac{(240)^2}{60} = 960 \text{ VA}$$

$$\mathbf{S} = \mathbf{S}_1 + \mathbf{S}_2 + \mathbf{S}_3 = \underline{\mathbf{1835.88 - j114.68 \text{ VA}}}$$

(b) $$\theta = \tan^{-1}\left(\frac{114.68}{1835.88}\right) = 3.574°$$

$$\text{pf} = \cos\theta = \underline{\mathbf{0.998}}$$

(c) $$Q_c = P[\tan\theta_2 - \tan\theta_1] = 18.35.88[\tan(3.574°) - 0]$$
$$Q_c = 114.68 \text{ VAR}$$

$$C = \frac{Q_c}{\omega V_{rms}^2} = \frac{114.68}{(2\pi)(50)(240)^2} = \underline{\mathbf{6.336\ \mu F}}$$

Chapter 11, Solution 76.

The wattmeter reads the real power supplied by the current source. Consider the circuit below.

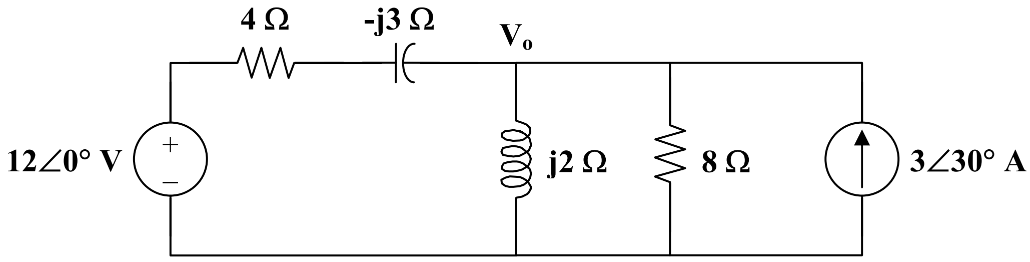

$$3\angle 30° + \frac{12 - \mathbf{V}_o}{4 - j3} = \frac{\mathbf{V}_o}{j2} + \frac{\mathbf{V}_o}{8}$$

$$\mathbf{V}_o = \frac{36.14 + j23.52}{2.28 - j3.04} = 0.7547 + j11.322 = 11.347\angle 86.19°$$

$$\mathbf{S} = \frac{1}{2}\mathbf{V}_o\,\mathbf{I}_o^* = \frac{1}{2}\cdot(11.347\angle 86.19°)(3\angle -30°)$$

$$\mathbf{S} = 17.021\angle 56.19°$$

$$\text{P} = \text{Re}(\mathbf{S}) = \underline{\mathbf{9.471\ W}}$$

Chapter 11, Solution 77.

The wattmeter measures the power absorbed by the parallel combination of 0.1 F and 150 Ω.

$$120\cos(2t) \longrightarrow 120\angle 0°, \qquad \omega = 2$$

$$4\text{ H} \longrightarrow j\omega L = j8$$

$$0.1\text{ F} \longrightarrow \frac{1}{j\omega C} = \text{-}j5$$

Consider the following circuit.

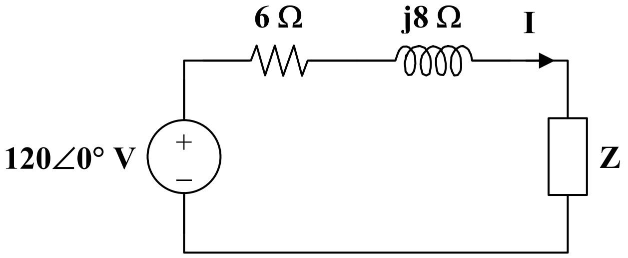

$$\mathbf{Z} = 15 \,||\, (\text{-}j5) = \frac{(15)(\text{-}j5)}{15 - j5} = 1.5 - j4.5$$

$$\mathbf{I} = \frac{120}{(6 + j8) + (1.5 - j4.5)} = 14.5\angle -25.02°$$

$$\mathbf{S} = \frac{1}{2}\mathbf{V}\mathbf{I}^* = \frac{1}{2}\left|\mathbf{I}\right|^2 \mathbf{Z} = \frac{1}{2}\cdot(14.5)^2(1.5 - j4.5)$$

$$\mathbf{S} = 157.69 - j473.06\text{ VA}$$

The wattmeter reads

$$\text{P} = \text{Re}(\mathbf{S}) = \underline{\mathbf{157.69\ W}}$$

Chapter 11, Solution 78.

The wattmeter reads the power absorbed by the element to its right side.

$2\cos(4t) \longrightarrow 2\angle 0°, \qquad \omega = 4$

$1\text{ H} \longrightarrow j\omega L = j4$

$\frac{1}{12}\text{F} \longrightarrow \frac{1}{j\omega C} = -j3$

Consider the following circuit.

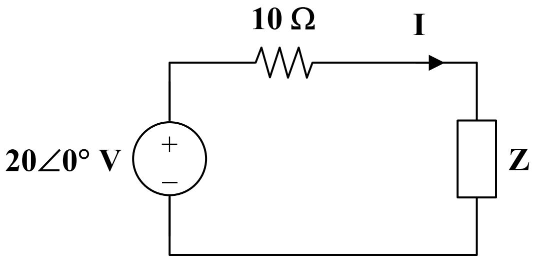

$$\mathbf{Z} = 5 + j4 + 4 \,||\, -j3 = 5 + j4 + \frac{(4)(-j3)}{4 - j3}$$

$$\mathbf{Z} = 6.44 + j2.08$$

$$\mathbf{I} = \frac{20}{16.44 + j2.08} = 1.207\angle -7.21°$$

$$\mathbf{S} = \frac{1}{2}\left|\mathbf{I}\right|^2 \mathbf{Z} = \frac{1}{2}\cdot(1.207)^2(6.44 + j2.08)$$

$$P = \text{Re}(\mathbf{S}) = \underline{\mathbf{4.691\ W}}$$

Chapter 11, Solution 79.

The wattmeter reads the power supplied by the source and partly absorbed by the 40-Ω resistor.

$\omega = 100,$

$$10\,\text{mH} \longrightarrow j100x10x10^{-3} = j, \quad 500\mu\text{F} \longrightarrow \frac{1}{j\omega C} = \frac{1}{j100x500x10^{-6}} = -j20$$

The frequency-domain circuit is shown below.

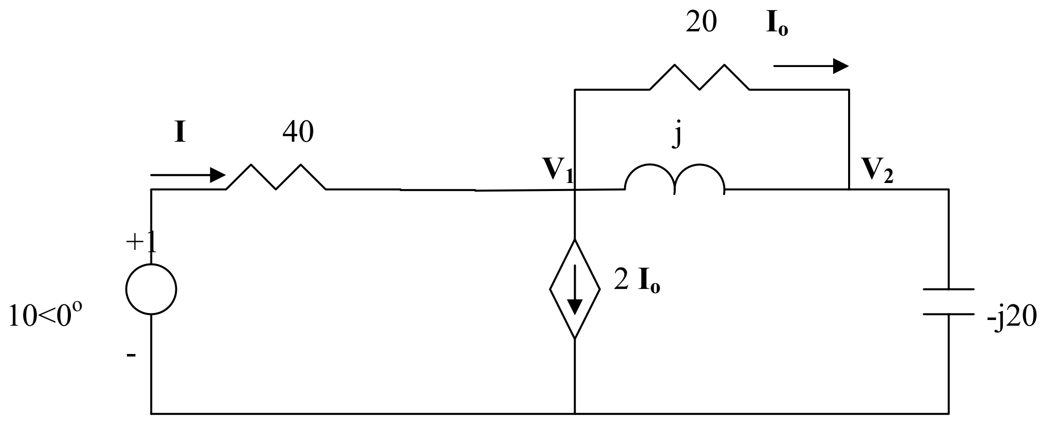

At node 1,

$$\frac{10 - V_1}{40} = 2I_o + \frac{V_1 - V_2}{j} + \frac{V_1 - V_2}{20} = \frac{3(V_1 - V_2)}{20} + \frac{V_1 - V_2}{j} \longrightarrow \quad (1)$$

$$10 = (7 - j40)V_1 + (-6 + j40)V_2$$

At node 2,

$$\frac{V_1 - V_2}{j} + \frac{V_1 - V_2}{20} = \frac{V_2}{-j20} \longrightarrow 0 = (20 + j)V_1 - (19 + j)V_2 \quad (2)$$

Solving (1) and (2) yields $\mathbf{V_1} = 1.5568 - j4.1405$

$$I = \frac{10 - V_1}{40} = 0.8443 + j0.4141, \qquad S = \frac{1}{2}VI^{\bullet} = 4.2216 - j2.0703$$

$$P = \text{Re}(S) = \underline{\mathbf{4.222\ W}}.$$

Chapter 11, Solution 80.

(a) $\mathbf{I} = \dfrac{\mathbf{V}}{\mathbf{Z}} = \dfrac{110}{6.4} = \underline{\mathbf{17.19\ A}}$

(b) $\mathbf{S} = \dfrac{\mathbf{V}^2}{\mathbf{Z}} = \dfrac{(110)^2}{6.4} = 1890.625$

$\cos\theta = pf = 0.825 \longrightarrow \theta = 34.41°$

$P = S\cos\theta = 1559.76 \cong \underline{\mathbf{1.6\ kW}}$

Chapter 11, Solution 81.

kWh consumed $= 4017 - 3246 = 771$ kWh

The electricity bill is calculated as follows :

(a) Fixed charge = \$12
(b) First 100 kWh at \$0.16 per kWh = \$16
(c) Next 200 kWh at \$0.10 per kWh = \$20
(d) The remaining energy (771 – 300) = 471 kWh at \$0.06 per kWh = \$28.26.

Adding (a) to (d) gives **\$76.26**

Chapter 11, Solution 82.

(a) $P_1 = 5{,}000, \quad Q_1 = 0$

$P_2 = 30{,}000x0.82 = 24{,}600, \quad Q_2 = 30{,}000\sin(\cos^{-1} 0.82) = 17{,}171$

$\overline{S} = \overline{S}_1 + \overline{S}_2 = (P_1 + P_2) + j(Q_1 + Q_2) = 29{,}600 + j17{,}171$

$S = |\overline{S}| = \underline{34.22\ \text{kVA}}$

(b) $Q = \underline{\mathbf{17.171\ kVAR}}$

(c) $pf = \dfrac{P}{S} = \dfrac{29{,}600}{34{,}220} = 0.865$

$Q_c = P(\tan\theta_1 - \tan\theta_2)$

$= 29{,}600\left[\tan(\cos^{-1} 0.865) - \tan(\cos^{-1} 0.9)\right] = \underline{2833\ \text{VAR}}$

(d) $C = \dfrac{Q_c}{\omega V^2_{rms}} = \dfrac{2833}{2\pi x 60 x 240^2} = \underline{130.46\mu\text{F}}$

Chapter 11, Solution 83.

(a) $\overline{S} = \frac{1}{2}VI^* = \frac{1}{2}(210\angle 60^o)(8\angle -25^o) = 840\angle 35^o$

$P = S\cos\theta = 840\cos 35^o = \underline{688.1\text{ W}}$

(b) S = **<u>840 VA</u>**

(c) $Q = S\sin\theta = 840\sin 35^o = \underline{481.8\text{ VAR}}$

(d) $pf = P/S = \cos 35^o = \underline{0.8191\ \text{(lagging)}}$

Chapter 11, Solution 84.

(a) Maximum demand charge $= 2{,}400 \times 30 = \$72{,}000$

Energy cost $= \$0.04 \times 1{,}200 \times 10^3 = \$48{,}000$

Total charge = **<u>$120,000</u>**

(b) To obtain $120,000 from 1,200 MWh will require a flat rate of

$\frac{\$120{,}000}{1{,}200 \times 10^3}$ per kWh = **<u>$0.10 per kWh</u>**

Chapter 11, Solution 85.

(a) 15 mH $\longrightarrow$ $j2\pi x60x15x10^{-3} = j5.655$

We apply mesh analysis as shown below.

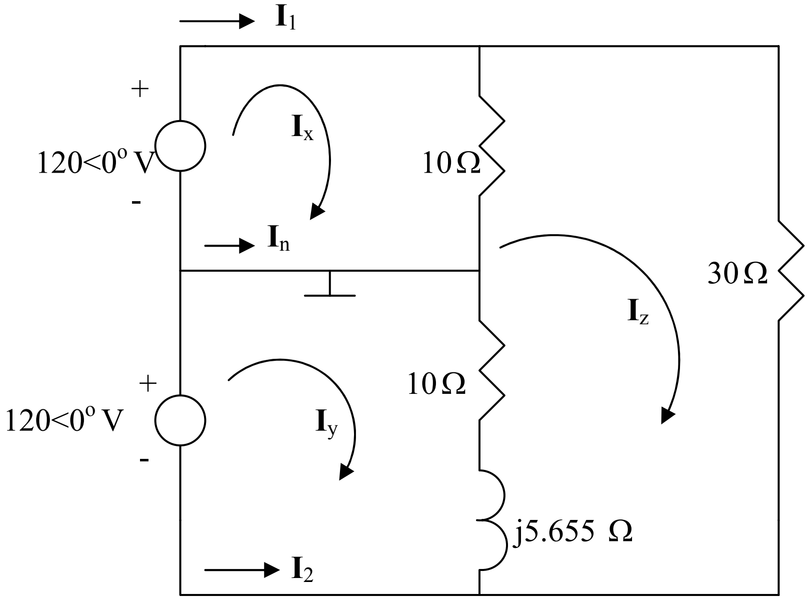

For mesh x,

$120 = 10\,\mathbf{I}_x - 10\,\mathbf{I}_z \qquad (1)$

For mesh y,

$120 = (10+j5.655)\,\mathbf{I}_y - (10+j5.655)\,\mathbf{I}_z \qquad (2)$

For mesh z,

$0 = -10\,\mathbf{I}_x - (10+j5.655)\,\mathbf{I}_y + (50+j5.655)\,\mathbf{I}_z \qquad (3)$

Solving (1) to (3) gives

$\mathbf{I}_x = 20,\ \mathbf{I}_y = 17.09 - j5.142,\ \mathbf{I}_z = 8$

Thus,

$\mathbf{I}_1 = \mathbf{I}_x = \underline{20\text{ A}}$

$\mathbf{I}_2 = -\mathbf{I}_y = -17.09 + j5.142 = \underline{17.85\angle 163.26^o\ \text{ A}}$

$\mathbf{I}_n = \mathbf{I}_y - \mathbf{I}_x = -2.091 - j5.142 = \underline{5.907\angle -119.5^o\ \text{ A}}$

(b) $\overline{S_1} = \frac{1}{2}(120)I^\bullet{}_x = 60x20 = 1200, \qquad \overline{S_2} = \frac{1}{2}(120)I^\bullet{}_y = 1025.5 - j308.5$

$\overline{S} = \overline{S_1} + \overline{S_2} = \underline{2225.5 - j308.5\text{ VA}}$

(c) pf = P/S = 2225.5/2246.8 = <u>0.9905</u>

Chapter 11, Solution 86.

For maximum power transfer

$$\mathbf{Z}_L = \mathbf{Z}^*_{Th} \longrightarrow \mathbf{Z}_i = \mathbf{Z}_{Th} = \mathbf{Z}^*_L$$

$$\mathbf{Z}_L = R + j\omega L = 75 + j(2\pi)(4.12\times10^6)(4\times10^{-6})$$

$$\mathbf{Z}_L = 75 + j103.55\,\Omega$$

$$\mathbf{Z}_i = \underline{\mathbf{75 - j103.55\,\Omega}}$$

Chapter 11, Solution 87.

$$\mathbf{Z} = R \pm jX$$

$$\mathbf{V}_R = \mathbf{I}R \longrightarrow R = \frac{\mathbf{V}_R}{\mathbf{I}} = \frac{80}{50\times10^{-3}} = 1.6\text{ k}\Omega$$

$$|\mathbf{Z}|^2 = R^2 + X^2 \longrightarrow X^2 = |\mathbf{Z}|^2 - R^2 = (3)^2 - (1.6)^2$$

$$X = 2.5377\text{ k}\Omega$$

$$\theta = \tan^{-1}\left(\frac{X}{R}\right) = \tan^{-1}\left(\frac{2.5377}{1.6}\right) = 57.77°$$

$$\text{pf} = \cos\theta = \underline{\mathbf{0.5333}}$$

Chapter 11, Solution 88.

(a) $\mathbf{S} = (110)(2\angle 55°) = 220\angle 55°$

$P = S\cos\theta = 220\cos(55°) = \underline{\mathbf{126.2\ W}}$

(b) $S = |\mathbf{S}| = \underline{\mathbf{220\ VA}}$

Chapter 11, Solution 89.

(a) Apparent power $= S = \underline{\mathbf{12\ kVA}}$

$P = S\cos\theta = (12)(0.78) = 9.36\ \text{kW}$
$Q = S\sin\theta = 12\sin(\cos^{-1}(0.78)) = 7.51\ \text{kVAR}$

$\mathbf{S} = P + jQ = \underline{\mathbf{9.36 + j7.51\ kVA}}$

(b) $$\mathbf{S} = \frac{|\mathbf{V}|^2}{\mathbf{Z}^*} \longrightarrow \mathbf{Z}^* = \frac{|\mathbf{V}|^2}{\mathbf{S}} = \frac{(210)^2}{(9.36 + j7.51)\times 10^3}$$

$\mathbf{Z} = \underline{\mathbf{34.398 + j27.6\ \Omega}}$

Chapter 11, Solution 90

Original load :

$P_1 = 2000\ \text{kW}, \qquad \cos\theta_1 = 0.85 \longrightarrow \theta_1 = 31.79°$

$$S_1 = \frac{P_1}{\cos\theta_1} = 2352.94\ \text{kVA}$$

$Q_1 = S_1 \sin\theta_1 = 1239.5\ \text{kVAR}$

Additional load :

$P_2 = 300\ \text{kW}, \qquad \cos\theta_2 = 0.8 \longrightarrow \theta_2 = 36.87°$

$$S_2 = \frac{P_2}{\cos\theta_2} = 375\ \text{kVA}$$

$Q_2 = S_2 \sin\theta_2 = 225\ \text{kVAR}$

Total load :

$$\mathbf{S} = \mathbf{S}_1 + \mathbf{S}_2 = (P_1 + P_2) + j(Q_1 + Q_2) = P + jQ$$
$$P = 2000 + 300 = 2300 \text{ kW}$$
$$Q = 1239.5 + 225 = 1464.5 \text{ kVAR}$$

The minimum operating pf for a 2300 kW load and not exceeding the kVA rating of the generator is

$$\cos\theta = \frac{P}{S_1} = \frac{2300}{2352.94} = 0.9775$$

$$\text{or} \qquad \theta = 12.177°$$

The maximum load kVAR for this condition is

$$Q_m = S_1 \sin\theta = 2352.94 \sin(12.177°)$$
$$Q_m = 496.313 \text{ kVAR}$$

The capacitor must supply the difference between the total load kVAR (i.e. Q) and the permissible generator kVAR (i.e. Q_m). Thus,

$$Q_c = Q - Q_m = \underline{\mathbf{968.2\ kVAR}}$$

Chapter 11, Solution 91

$$P = S\cos\theta$$

$$pf = \cos\theta = \frac{P}{S} = \frac{2700}{(220)(15)} = \underline{0.8182}$$

$$Q = S\sin\theta = 220(15)\sin(35.09°) = 1897.3$$

When the power is raised to unity pf, $\theta_1 = 0°$ and $Q_c = Q = 1897.3$

$$C = \frac{Q_c}{\omega V_{rms}^2} = \frac{1897.3}{(2\pi)(60)(220)^2} = \underline{\mathbf{104\ \mu F}}$$

Chapter 11, Solution 92

(a) Apparent power drawn by the motor is

$$S_m = \frac{P}{\cos\theta} = \frac{60}{0.75} = 80 \text{ kVA}$$

$$Q_m = \sqrt{S^2 - P^2} = \sqrt{(80)^2 - (60)^2} = 52.915 \text{ kVAR}$$

Total real power

$$P = P_m + P_c + P_L = 60 + 0 + 20 = 80 \text{ kW}$$

Total reactive power

$$Q = Q_m + Q_c + Q_L = 52.915 - 20 + 0 = \underline{\mathbf{32.91\ kVAR}}$$

Total apparent power

$$S = \sqrt{P^2 + Q^2} = \underline{\mathbf{86.51\ kVA}}$$

(b) $$\text{pf} = \frac{P}{S} = \frac{80}{86.51} = \underline{\mathbf{0.9248}}$$

(c) $$I = \frac{S}{V} = \frac{86510}{550} = \underline{\mathbf{157.3\ A}}$$

Chapter 11, Solution 93

(a) $$P_1 = (5)(0.7457) = 3.7285 \text{ kW}$$

$$S_1 = \frac{P_1}{\text{pf}} = \frac{3.7285}{0.8} = 4.661 \text{ kVA}$$

$$Q_1 = S_1 \sin(\cos^{-1}(0.8)) = 2.796 \text{ kVAR}$$
$$\mathbf{S}_1 = 3.7285 + j2.796 \text{ kVA}$$

$$P_2 = 1.2 \text{ kW}, \qquad Q_2 = 0 \text{ VAR}$$
$$\mathbf{S}_2 = 1.2 + j0 \text{ kVA}$$

$$P_3 = (10)(120) = 1.2 \text{ kW}, \qquad Q_3 = 0 \text{ VAR}$$
$$\mathbf{S}_3 = 1.2 + j0 \text{ kVA}$$

$Q_4 = 1.6\text{ kVAR}, \qquad \cos\theta_4 = 0.6 \longrightarrow \sin\theta_4 = 0.8$

$$S_4 = \frac{Q_4}{\sin\theta_4} = 2\text{ kVA}$$

$P_4 = S_4 \cos\theta_4 = (2)(0.6) = 1.2\text{ kW}$
$\mathbf{S}_4 = 1.2 - j1.6\text{ kVA}$

$\mathbf{S} = \mathbf{S}_1 + \mathbf{S}_2 + \mathbf{S}_3 + \mathbf{S}_4$
$\mathbf{S} = 7.3285 + j1.196\text{ kVA}$

Total real power = **7.3285 kW**
Total reactive power = **1.196 kVAR**

(b) $$\theta = \tan^{-1}\left(\frac{1.196}{7.3285}\right) = 9.27°$$

$\text{pf} = \cos\theta =$ **0.987**

Chapter 11, Solution 94

$\cos\theta_1 = 0.7 \longrightarrow \theta_1 = 45.57°$
$S_1 = 1\text{ MVA} = 1000\text{ kVA}$
$P_1 = S_1\cos\theta_1 = 700\text{ kW}$
$Q_1 = S_1\sin\theta_1 = 714.14\text{ kVAR}$

For improved pf,

$\cos\theta_2 = 0.95 \longrightarrow \theta_2 = 18.19°$
$P_2 = P_1 = 700\text{ kW}$

$$S_2 = \frac{P_2}{\cos\theta_2} = \frac{700}{0.95} = 736.84\text{ kVA}$$

$Q_2 = S_2\sin\theta_2 = 230.08\text{ kVAR}$

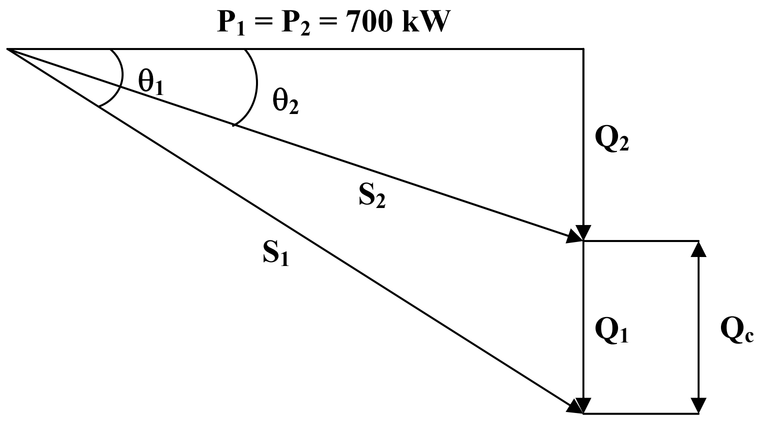

(a) Reactive power across the capacitor

$$Q_c = Q_1 - Q_2 = 714.14 - 230.08 = 484.06 \text{ kVAR}$$

Cost of installing capacitors $= \$30 \times 484.06 =$ **$14,521.80**

(b) Substation capacity released $= S_1 - S_2$

$$= 1000 - 736.84 = 263.16 \text{ kVA}$$

Saving in cost of substation and distribution facilities

$$= \$120 \times 263.16 = \mathbf{\$31,579.20}$$

(c) **Yes**, because (a) is greater than (b). Additional system capacity obtained by using capacitors costs only 46% as much as new substation and distribution facilities.

Chapter 11, Solution 95

(a) Source impedance $\mathbf{Z}_s = R_s - jX_c$

Load impedance $\mathbf{Z}_L = R_L + jX_2$

For maximum load transfer

$$\mathbf{Z}_L = \mathbf{Z}_s^* \longrightarrow R_s = R_L, \quad X_c = X_L$$

$$X_c = X_L \longrightarrow \frac{1}{\omega C} = \omega L$$

or $$\omega = \frac{1}{\sqrt{LC}} = 2\pi f$$

$$f = \frac{1}{2\pi\sqrt{LC}} = \frac{1}{2\pi\sqrt{(80\times10^{-3})(40\times10^{-9})}} = \underline{\mathbf{2.814\ kHz}}$$

(b) $$P = \frac{V_s^2}{4R_L} = \frac{(4.6)^2}{(4)(10)} = \underline{\mathbf{529\ mW}} \qquad \text{(since } V_s \text{ is in rms)}$$

Chapter 11, Solution 96

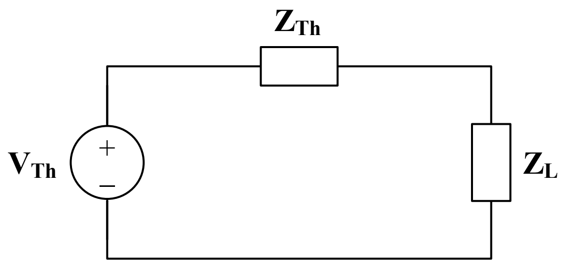

(a) $$V_{Th} = 146\text{ V},\quad 300\text{ Hz}$$
$$Z_{Th} = 40 + j8\,\Omega$$

$$Z_L = Z_{Th}^* = \underline{\mathbf{40 - j8\,\Omega}}$$

(b) $$P = \frac{|V_{Th}|^2}{8R_{Th}} = \frac{(146)^2}{(8)(40)} = \underline{\mathbf{66.61\ W}}$$

Chapter 11, Solution 97

$$Z_T = (2)(0.1 + j) + (100 + j20) = 100.2 + j22\,\Omega$$

$$I = \frac{V_s}{Z_T} = \frac{240}{100.2 + j22}$$

$$P = |I|^2 R_L = 100|I|^2 = \frac{(100)(240)^2}{(100.2)^2 + (22)^2} = \underline{\mathbf{547.3\ W}}$$

Chapter 12, Solution 1.

(a) If $\mathbf{V}_{ab} = 400$, then

$$\mathbf{V}_{an} = \frac{400}{\sqrt{3}}\angle -30° = \underline{\mathbf{231\angle -30°\ V}}$$

$$\mathbf{V}_{bn} = \underline{\mathbf{231\angle -150°\ V}}$$
$$\mathbf{V}_{cn} = \underline{\mathbf{231\angle -270°\ V}}$$

(b) For the acb sequence,

$$\mathbf{V}_{ab} = \mathbf{V}_{an} - \mathbf{V}_{bn} = V_p\angle 0° - V_p\angle 120°$$

$$\mathbf{V}_{ab} = V_p\left(1 + \frac{1}{2} - j\frac{\sqrt{3}}{2}\right) = V_p\sqrt{3}\angle -30°$$

i.e. in the acb sequence, $\mathbf{V}_{ab}$ lags $\mathbf{V}_{an}$ by 30°.

Hence, if $\mathbf{V}_{ab} = 400$, then

$$\mathbf{V}_{an} = \frac{400}{\sqrt{3}}\angle 30° = \underline{\mathbf{231\angle 30°\ V}}$$

$$\mathbf{V}_{bn} = \underline{\mathbf{231\angle 150°\ V}}$$
$$\mathbf{V}_{cn} = \underline{\mathbf{231\angle -90°\ V}}$$

Chapter 12, Solution 2.

Since phase c lags phase a by 120°, this is an **acb sequence**.

$$\mathbf{V}_{bn} = 160\angle(30° + 120°) = \underline{\mathbf{160\angle 150°\ V}}$$

Chapter 12, Solution 3.

Since $\mathbf{V}_{bn}$ leads $\mathbf{V}_{cn}$ by 120°, this is an **abc sequence**.

$$\mathbf{V}_{an} = 208\angle(130° + 120°) = \underline{\mathbf{208\angle 250°\ V}}$$

Chapter 12, Solution 4.

$$\mathbf{V}_{bc} = \mathbf{V}_{ca}\angle 120° = \underline{\mathbf{208\angle 140°\ V}}$$

$$\mathbf{V}_{ab} = \mathbf{V}_{bc}\angle 120° = \underline{\mathbf{208\angle 260°\ V}}$$

$$\mathbf{V}_{an} = \frac{\mathbf{V}_{ab}}{\sqrt{3}\angle 30°} = \frac{208\angle 260°}{\sqrt{3}\angle 30°} = \underline{\mathbf{120\angle 230°\ V}}$$

$$\mathbf{V}_{bn} = \mathbf{V}_{an}\angle -120° = \underline{\mathbf{120\angle 110°\ V}}$$

Chapter 12, Solution 5.

This is an abc phase sequence.

$$\mathbf{V}_{ab} = \mathbf{V}_{an}\sqrt{3}\angle 30°$$

or $$\mathbf{V}_{an} = \frac{\mathbf{V}_{ab}}{\sqrt{3}\angle 30°} = \frac{420\angle 0°}{\sqrt{3}\angle 30°} = \underline{\mathbf{242.5\angle -30°\ V}}$$

$$\mathbf{V}_{bn} = \mathbf{V}_{an}\angle -120° = \underline{\mathbf{242.5\angle -150°\ V}}$$

$$\mathbf{V}_{cn} = \mathbf{V}_{an}\angle 120° = \underline{\mathbf{242.5\angle 90°\ V}}$$

Chapter 12, Solution 6.

$$\mathbf{Z}_{Y} = 10 + j5 = 11.18\angle 26.56°$$

The line currents are

$$\mathbf{I}_{a} = \frac{\mathbf{V}_{an}}{\mathbf{Z}_{Y}} = \frac{220\angle 0°}{11.18\angle 26.56°} = \underline{\mathbf{19.68\angle -26.56°\ A}}$$

$$\mathbf{I}_{b} = \mathbf{I}_{a}\angle -120° = \underline{\mathbf{19.68\angle -146.56°\ A}}$$

$$\mathbf{I}_{c} = \mathbf{I}_{a}\angle 120° = \underline{\mathbf{19.68\angle 93.44°\ A}}$$

The line voltages are

$$\mathbf{V}_{ab} = 200\sqrt{3}\angle 30° = \underline{\mathbf{381\angle 30°\ V}}$$

$$\mathbf{V}_{bc} = \underline{\mathbf{381\angle -90°\ V}}$$

$$\mathbf{V}_{ca} = \underline{\mathbf{381\angle -210°\ V}}$$

The load voltages are

$$\mathbf{V}_{AN} = \mathbf{I}_a\,\mathbf{Z}_Y = \mathbf{V}_{an} = \underline{\mathbf{220\angle 0°\ V}}$$

$$\mathbf{V}_{BN} = \mathbf{V}_{bn} = \underline{\mathbf{220\angle -120°\ V}}$$

$$\mathbf{V}_{CN} = \mathbf{V}_{cn} = \underline{\mathbf{220\angle 120°\ V}}$$

Chapter 12, Solution 7.

This is a balanced Y-Y system.

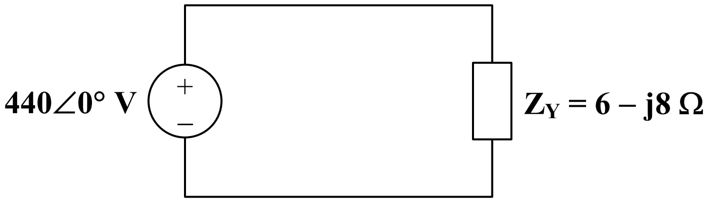

Using the per-phase circuit shown above,

$$\mathbf{I}_a = \frac{440\angle 0°}{6 - j8} = \underline{\mathbf{44\angle 53.13°\ A}}$$

$$\mathbf{I}_b = \mathbf{I}_a\angle -120° = \underline{\mathbf{44\angle -66.87°\ A}}$$

$$\mathbf{I}_c = \mathbf{I}_a\angle 120° = \underline{\mathbf{44\angle 173.13°\ A}}$$

Chapter 12, Solution 8.

$V_L = 220\ \text{V}, \qquad \mathbf{Z}_Y = 16 + j9\ \Omega$

$$\mathbf{I}_{an} = \frac{V_p}{\mathbf{Z}_Y} = \frac{V_L}{\sqrt{3}\,\mathbf{Z}_Y} = \frac{220}{\sqrt{3}\,(16 + j9)} = 6.918\angle -29.36°$$

$I_L = \underline{\mathbf{6.918\ A}}$

Chapter 12, Solution 9.

$$\mathbf{I}_a = \frac{\mathbf{V}_{an}}{\mathbf{Z}_L + \mathbf{Z}_Y} = \frac{120\angle 0°}{20 + j15} = \underline{\mathbf{4.8\angle\text{-}36.87° \; A}}$$

$$\mathbf{I}_b = \mathbf{I}_a \angle\text{-}120° = \underline{\mathbf{4.8\angle\text{-}156.87° \; A}}$$

$$\mathbf{I}_c = \mathbf{I}_a \angle 120° = \underline{\mathbf{4.8\angle 83.13° \; A}}$$

As a balanced system, $\mathbf{I}_n = \underline{\mathbf{0 \; A}}$

Chapter 12, Solution 10.

Since the neutral line is present, we can solve this problem on a per-phase basis.

For phase a,

$$\mathbf{I}_a = \frac{\mathbf{V}_{an}}{\mathbf{Z}_A + 2} = \frac{220\angle 0°}{27 - j20} = 6.55\angle 36.53°$$

For phase b,

$$\mathbf{I}_b = \frac{\mathbf{V}_{bn}}{\mathbf{Z}_B + 2} = \frac{220\angle\text{-}120°}{22} = 10\angle\text{-}120°$$

For phase c,

$$\mathbf{I}_c = \frac{\mathbf{V}_{cn}}{\mathbf{Z}_C + 2} = \frac{220\angle 120°}{12 + j5} = 16.92\angle 97.38°$$

The current in the neutral line is

$$\mathbf{I}_n = \text{-}(\mathbf{I}_a + \mathbf{I}_b + \mathbf{I}_c)$$

or

$$\text{-}\mathbf{I}_n = \mathbf{I}_a + \mathbf{I}_b + \mathbf{I}_c$$

$$\text{-}\mathbf{I}_n = (5.263 + j3.9) + (\text{-}5 - j8.66) + (\text{-}2.173 + j16.78)$$

$$\mathbf{I}_n = 1.91 - j12.02 = \underline{\mathbf{12.17\angle\text{-}81° \; A}}$$

Chapter 12, Solution 11.

$$\mathbf{V}_{an} = \frac{\mathbf{V}_{bc}}{\sqrt{3}\angle -90°} = \frac{\mathbf{V}_{BC}}{\sqrt{3}\angle -90°} = \frac{220\angle 10°}{\sqrt{3}\angle -90°}$$

$$\mathbf{V}_{an} = \underline{\mathbf{127\angle 100°\ V}}$$

$$\mathbf{V}_{AB} = \mathbf{V}_{BC}\angle 120° = \underline{\mathbf{220\angle 130°\ V}}$$

$$\mathbf{V}_{AC} = \mathbf{V}_{BC}\angle -120° = 220\angle -110°\ \text{V}$$

If $\mathbf{I}_{bB} = 30\angle 60°$, then

$\mathbf{I}_{aA} = 30\angle 180°$, $\qquad \mathbf{I}_{cC} = 30\angle -60°$

$$\mathbf{I}_{AB} = \frac{\mathbf{I}_{aA}}{\sqrt{3}\angle -30°} = \frac{30\angle 180°}{\sqrt{3}\angle -30°} = 17.32\angle 210°$$

$\mathbf{I}_{BC} = 17.32\angle 90°$, $\qquad \mathbf{I}_{CA} = 17.32\angle -30°$

$$\mathbf{I}_{AC} = -\mathbf{I}_{CA} = \underline{\mathbf{17.32\angle 150°\ A}}$$

$$\mathbf{I}_{BC}\mathbf{Z} = \mathbf{V}_{BC}$$

$$\mathbf{Z} = \frac{\mathbf{V}_{BC}}{\mathbf{I}_{BC}} = \frac{220\angle 0°}{17.32\angle 90°} = \underline{\mathbf{12.7\angle -80°\ \Omega}}$$

Chapter 12, Solution 12.

Convert the delta-load to a wye-load and apply per-phase analysis.

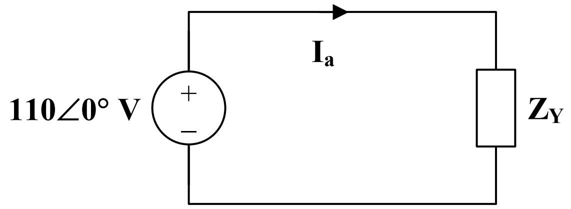

$$\mathbf{Z}_{Y} = \frac{\mathbf{Z}_{\Delta}}{3} = 20\angle 45°\ \Omega$$

$$\mathbf{I}_a = \frac{110\angle 0^\circ}{20\angle 45^\circ} = \underline{\mathbf{5.5\angle -45^\circ\ A}}$$
$$\mathbf{I}_b = \mathbf{I}_a\angle -120^\circ = \underline{\mathbf{5.5\angle -165^\circ\ A}}$$
$$\mathbf{I}_c = \mathbf{I}_a\angle 120^\circ = \underline{\mathbf{5.5\angle 75^\circ\ A}}$$

Chapter 12, Solution 13.

First we calculate the wye equivalent of the balanced load.

$$Z_Y = (1/3)Z_\Delta = 6+j5$$

Now we only need to calculate the line currents using the wye-wye circuits.

$$I_a = \frac{110}{2+j10+6+j5} = \underline{6.471\angle -61.93^\circ\,A}$$
$$I_b = \frac{110\angle -120^\circ}{8+j15} = \underline{6.471\angle 178.07^\circ\,A}$$
$$I_c = \frac{110\angle 120^\circ}{8+j15} = \underline{6.471\angle 58.07^\circ\,A}$$

Chapter 12, Solution 14.

We apply mesh analysis.

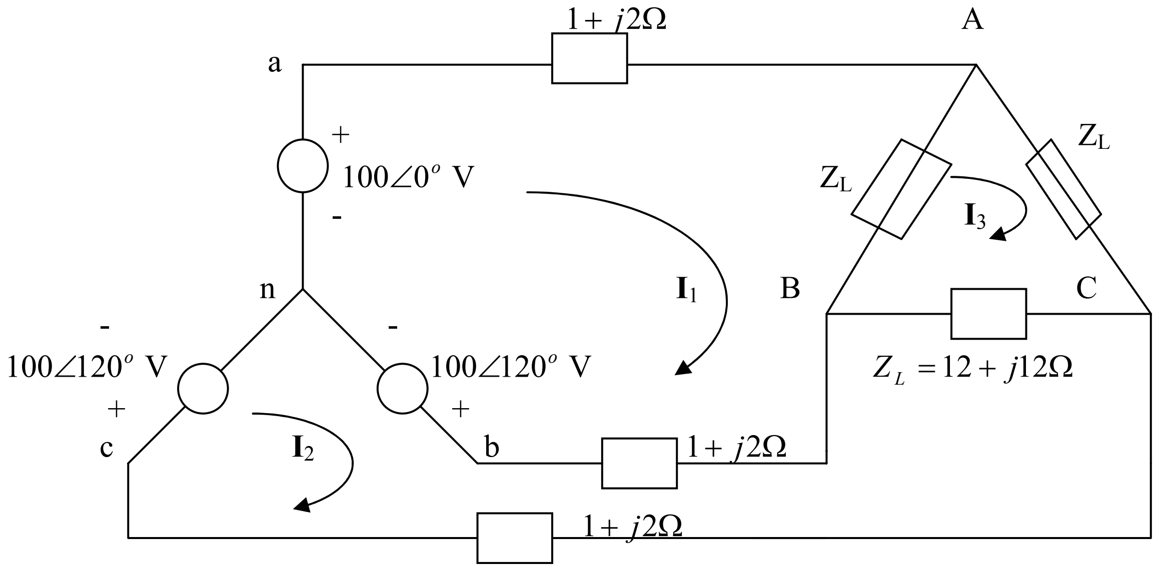

For mesh 1,

$$-100 + 100\angle 120^o + I_1(14 + j16) - (1 + j2)I_2 - (12 + j12)I_3 = 0$$

or

$$(14 + j16)I_1 - (1 + j2)I_2 - (12 + j12)I_3 = 100 + 50 - j86.6 = 150 - j86.6 \qquad (1)$$

For mesh 2,

$$100\angle 120^o - 100\angle -120^o - I_1(1 + j2) - (12 + j12)I_3 + (14 + j16)I_2 = 0$$

or

$$-(1 + j2)I_1 + (14 + j16)I_2 - (12 + j12)I_3 = -50 - j86.6 + 50 - j86.6 = -j173.2 \quad (2)$$

For mesh 3,

$$-(12 + j12)I_1 - (12 + j12)I_2 + (36 + j36)I_3 = 0 \qquad (3)$$

Solving (1) to (3) gives

$$I_1 = -3.161 - j19.3, \quad I_2 = -10.098 - j16.749, \quad I_3 = -4.4197 - j12.016$$

$I_{aA} = I_1 = \underline{19.58\angle -99.3^o \text{ A}}$

$I_{bB} = I_2 - I_1 = \underline{7.392\angle 159.8^o \text{ A}}$

$I_{cC} = -I_2 = \underline{19.56\angle 58.91^o \text{ A}}$

Chapter 12, Solution 15.

Convert the delta load, $\mathbf{Z}_\Delta$, to its equivalent wye load.

$$\mathbf{Z}_{Ye} = \frac{\mathbf{Z}_\Delta}{3} = 8 - j10$$

$$\mathbf{Z}_p = \mathbf{Z}_Y \parallel \mathbf{Z}_{Ye} = \frac{(12 + j5)(8 - j10)}{20 - j5} = 8.076\angle\text{-}14.68°$$

$$\mathbf{Z}_p = 7.812 - j2.047$$

$$\mathbf{Z}_T = \mathbf{Z}_p + \mathbf{Z}_L = 8.812 - j1.047$$
$$\mathbf{Z}_T = 8.874\angle\text{-}6.78°$$

We now use the per-phase equivalent circuit.

$$\mathbf{I}_a = \frac{V_p}{\mathbf{Z}_p + \mathbf{Z}_L}, \qquad \text{where} \quad V_p = \frac{210}{\sqrt{3}}$$

$$\mathbf{I}_a = \frac{210}{\sqrt{3}\,(8.874\angle\text{-}6.78°)} = 13.66\angle 6.78°$$

$$\mathbf{I}_L = \left|\mathbf{I}_a\right| = \underline{\mathbf{13.66\ A}}$$

Chapter 12, Solution 16.

(a) $\mathbf{I}_{CA} = \text{-}\mathbf{I}_{AC} = 10\angle(\text{-}30° + 180°) = 10\angle 150°$

This implies that

$$\mathbf{I}_{AB} = 10\angle 30°$$
$$\mathbf{I}_{BC} = 10\angle\text{-}90°$$

$$\mathbf{I}_a = \mathbf{I}_{AB}\sqrt{3}\angle\text{-}30° = \underline{\mathbf{17.32\angle 0°\ A}}$$
$$\mathbf{I}_b = \underline{\mathbf{17.32\angle\text{-}120°\ A}}$$
$$\mathbf{I}_c = \underline{\mathbf{17.32\angle 120°\ A}}$$

(b) $\mathbf{Z}_\Delta = \frac{\mathbf{V}_{AB}}{\mathbf{I}_{AB}} = \frac{110\angle 0°}{10\angle 30°} = \underline{\mathbf{11\angle\text{-}30°\ \Omega}}$

Chapter 12, Solution 17.

Convert the Δ-connected load to a Y-connected load and use per-phase analysis.

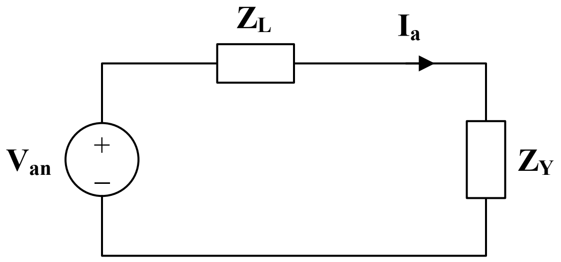

$$\mathbf{Z}_Y = \frac{\mathbf{Z}_\Delta}{3} = 3 + j4$$

$$\mathbf{I}_a = \frac{\mathbf{V}_{an}}{\mathbf{Z}_Y + \mathbf{Z}_L} = \frac{120\angle 0°}{(3 + j4) + (1 + j0.5)} = 19.931\angle -48.37°$$

But $\quad \mathbf{I}_a = \mathbf{I}_{AB}\sqrt{3}\angle -30°$

$$\mathbf{I}_{AB} = \frac{19.931\angle -48.37°}{\sqrt{3}\angle -30°} = \underline{\mathbf{11.51\angle -18.37°\ A}}$$

$$\mathbf{I}_{BC} = \underline{\mathbf{11.51\angle -138.4°\ A}}$$
$$\mathbf{I}_{CA} = \underline{\mathbf{11.51\angle 101.6°\ A}}$$

$$\mathbf{V}_{AB} = \mathbf{I}_{AB}\mathbf{Z}_\Delta = (11.51\angle -18.37°)(15\angle 53.13°)$$
$$\mathbf{V}_{AB} = \underline{\mathbf{172.6\angle 34.76°\ V}}$$

$$\mathbf{V}_{BC} = \underline{\mathbf{172.6\angle -85.24°\ V}}$$
$$\mathbf{V}_{CA} = \underline{\mathbf{172.6\angle 154.8°\ V}}$$

Chapter 12, Solution 18.

$$\mathbf{V}_{AB} = \mathbf{V}_{an}\sqrt{3}\angle 30° = (440\angle 60°)(\sqrt{3}\angle 30°) = 762.1\angle 90°$$

$$\mathbf{Z}_\Delta = 12 + j9 = 15\angle 36.87°$$

$$\mathbf{I}_{AB} = \frac{\mathbf{V}_{AB}}{\mathbf{Z}_\Delta} = \frac{762.1\angle 90°}{15\angle 36.87°} = \underline{\mathbf{50.81\angle 53.13°\ A}}$$

$$\mathbf{I}_{BC} = \mathbf{I}_{AB}\angle -120° = \underline{\mathbf{50.81\angle -66.87°\ A}}$$
$$\mathbf{I}_{CA} = \mathbf{I}_{AB}\angle 120° = \underline{\mathbf{50.81\angle 173.13°\ A}}$$

Chapter 12, Solution 19.

$$\mathbf{Z}_\Delta = 30 + j10 = 31.62\angle 18.43°$$

The phase currents are

$$\mathbf{I}_{AB} = \frac{\mathbf{V}_{ab}}{\mathbf{Z}_\Delta} = \frac{173\angle 0°}{31.62\angle 18.43°} = \underline{\mathbf{5.47\angle -18.43°\ A}}$$
$$\mathbf{I}_{BC} = \mathbf{I}_{AB}\angle -120° = \underline{\mathbf{5.47\angle -138.43°\ A}}$$
$$\mathbf{I}_{CA} = \mathbf{I}_{AB}\angle 120° = \underline{\mathbf{5.47\angle 101.57°\ A}}$$

The line currents are

$$\mathbf{I}_a = \mathbf{I}_{AB} - \mathbf{I}_{CA} = \mathbf{I}_{AB}\sqrt{3}\angle -30°$$
$$\mathbf{I}_a = 5.47\sqrt{3}\angle -48.43° = \underline{\mathbf{9.474\angle -48.43°\ A}}$$

$$\mathbf{I}_b = \mathbf{I}_a\angle -120° = \underline{\mathbf{9.474\angle -168.43°\ A}}$$
$$\mathbf{I}_c = \mathbf{I}_a\angle 120° = \underline{\mathbf{9.474\angle 71.57°\ A}}$$

Chapter 12, Solution 20.

$$\mathbf{Z}_\Delta = 12 + j9 = 15\angle 36.87°$$

The phase currents are

$$\mathbf{I}_{AB} = \frac{210\angle 0°}{15\angle 36.87°} = \underline{\mathbf{14\angle -36.87°\ A}}$$
$$\mathbf{I}_{BC} = \mathbf{I}_{AB}\angle -120° = \underline{\mathbf{14\angle -156.87°\ A}}$$
$$\mathbf{I}_{CA} = \mathbf{I}_{AB}\angle 120° = \underline{\mathbf{14\angle 83.13°\ A}}$$

The line currents are

$$\mathbf{I}_a = \mathbf{I}_{AB}\sqrt{3}\angle -30° = \underline{\mathbf{24.25\angle -66.87°\ A}}$$
$$\mathbf{I}_b = \mathbf{I}_a\angle -120° = \underline{\mathbf{24.25\angle -186.87°\ A}}$$
$$\mathbf{I}_c = \mathbf{I}_a\angle 120° = \underline{\mathbf{24.25\angle 53.13°\ A}}$$

Chapter 12, Solution 21.

(a) $$I_{AC} = \frac{-230\angle 120°}{10+j8} = \frac{-230\angle 120°}{12.806\angle 38.66°} = \underline{17.96\angle -98.66°\text{ A}}(\text{rms})$$

$$I_{bB} = I_{BC} + I_{BA} = I_{BC} - I_{AB} = \frac{230\angle -120}{10+j8} - \frac{230\angle 0°}{10+j8}$$

(b) $$= 17.96\angle -158.66° - 17.96\angle -38.66°$$

$$= -16.729 - j6.536 - 14.024 + j11.220 = -30.75 + j4.684$$

$$= \underline{31.10\angle 171.34°\text{ A}}$$

Chapter 12, Solution 22.

Convert the Δ-connected source to a Y-connected source.

$$\mathbf{V}_{an} = \frac{V_p}{\sqrt{3}}\angle\text{-}30° = \frac{208}{\sqrt{3}}\angle\text{-}30° = 120\angle\text{-}30°$$

Convert the Δ-connected load to a Y-connected load.

$$\mathbf{Z} = \mathbf{Z}_Y \,||\, \frac{\mathbf{Z}_\Delta}{3} = (4+j6)\,||\,(4-j5) = \frac{(4+j6)(4-j5)}{8+j}$$

$$\mathbf{Z} = 5.723 - j0.2153$$

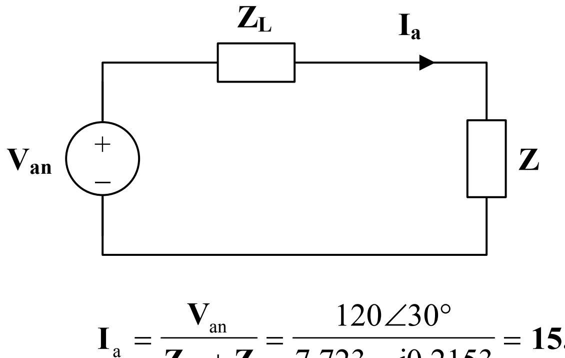

$$\mathbf{I}_a = \frac{\mathbf{V}_{an}}{\mathbf{Z}_L + \mathbf{Z}} = \frac{120\angle 30°}{7.723 - j0.2153} = \underline{\mathbf{15.53\angle\text{-}28.4°\ A}}$$

$$\mathbf{I}_b = \mathbf{I}_a\angle\text{-}120° = \underline{\mathbf{15.53\angle\text{-}148.4°\ A}}$$

$$\mathbf{I}_c = \mathbf{I}_a\angle 120° = \underline{\mathbf{15.53\angle 91.6°\ A}}$$

Chapter 12, Solution 23.

(a) $I_{AB} = \dfrac{V_{AB}}{Z_\Delta} = \dfrac{208}{25\angle 60^o}$

$$I_a = I_{AB}\sqrt{3}\angle -30^o = \frac{208\sqrt{3}\angle -30^o}{25\angle 60^o} = 14.411\angle -90^o$$

$$I_L = |I_a| = \underline{14.41\text{ A}}$$

(b) $P = P_1 + P_2 = \sqrt{3}V_L I_L \cos\theta = \sqrt{3}(208)\left(\dfrac{208\sqrt{3}}{25}\right)\cos 60^o = \underline{2.596\text{ kW}}$

Chapter 12, Solution 24.

Convert both the source and the load to their wye equivalents.

$$\mathbf{Z}_Y = \frac{\mathbf{Z}_\Delta}{3} = 20\angle 30° = 17.32 + j10$$

$$\mathbf{V}_{an} = \frac{\mathbf{V}_{ab}}{\sqrt{3}}\angle\text{-}30° = 240.2\angle 0°$$

We now use per-phase analysis.

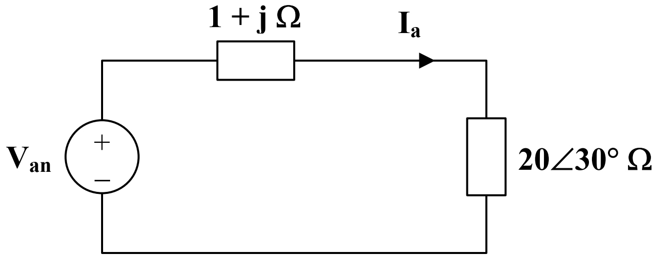

$$\mathbf{I}_a = \frac{\mathbf{V}_{an}}{(1+j)+(17.32+j10)} = \frac{240.2}{21.37\angle 31°} = \underline{\mathbf{11.24\angle\text{-}31°\ A}}$$

$$\mathbf{I}_b = \mathbf{I}_a\angle\text{-}120° = \underline{\mathbf{11.24\angle\text{-}151°\ A}}$$

$$\mathbf{I}_c = \mathbf{I}_a\angle 120° = \underline{\mathbf{11.24\angle 89°\ A}}$$

But $\mathbf{I}_a = \mathbf{I}_{AB}\sqrt{3}\angle -30°$

$$\mathbf{I}_{AB} = \frac{11.24\angle -31°}{\sqrt{3}\angle -30°} = \underline{\mathbf{6.489\angle -1°\ A}}$$

$$\mathbf{I}_{BC} = \mathbf{I}_{AB}\angle -120° = \underline{\mathbf{6.489\angle -121°\ A}}$$

$$\mathbf{I}_{CA} = \mathbf{I}_{AB}\angle 120° = \underline{\mathbf{6.489\angle 119°\ A}}$$

Chapter 12, Solution 25.

Convert the delta-connected source to an equivalent wye-connected source and consider the single-phase equivalent.

$$\mathbf{I}_a = \frac{440\angle(10° - 30°)}{\sqrt{3}\,\mathbf{Z}_Y}$$

where $\mathbf{Z}_Y = 3 + j2 + 10 - j8 = 13 - j6 = 14.32\angle -24°.78°$

$$\mathbf{I}_a = \frac{440\angle -20°}{\sqrt{3}\,(14.32\angle -24.78°)} = \underline{\mathbf{17.74\angle 4.78°\ A}}$$

$$\mathbf{I}_b = \mathbf{I}_a\angle -120° = \underline{\mathbf{17.74\angle -115.22°\ A}}$$

$$\mathbf{I}_c = \mathbf{I}_a\angle 120° = \underline{\mathbf{17.74\angle 124.78°\ A}}$$

Chapter 12, Solution 26.

Transform the source to its wye equivalent.

$$\mathbf{V}_{an} = \frac{V_p}{\sqrt{3}}\angle -30° = 72.17\angle -30°$$

Now, use the per-phase equivalent circuit.

$$\mathbf{I}_{aA} = \frac{\mathbf{V}_{an}}{\mathbf{Z}}, \qquad \mathbf{Z} = 24 - j15 = 28.3\angle -32°$$

$$\mathbf{I}_{aA} = \frac{72.17\angle -30°}{28.3\angle -32°} = \underline{\mathbf{2.55\angle 2° \ A}}$$

$$\mathbf{I}_{bB} = \mathbf{I}_{aA}\angle -120° = \underline{\mathbf{2.55\angle -118° \ A}}$$

$$\mathbf{I}_{cC} = \mathbf{I}_{aA}\angle 120° = \underline{\mathbf{2.55\angle 122° \ A}}$$

Chapter 12, Solution 27.

$$\mathbf{I}_{a} = \frac{\mathbf{V}_{ab}\angle -30°}{\sqrt{3}\,\mathbf{Z}_{Y}} = \frac{220\angle -10°}{\sqrt{3}\,(20 + j15)}$$

$$\mathbf{I}_{a} = \underline{\mathbf{5.081\angle -46.87° \ A}}$$

$$\mathbf{I}_{b} = \mathbf{I}_{a}\angle -120° = \underline{\mathbf{5.081\angle -166.87° \ A}}$$

$$\mathbf{I}_{c} = \mathbf{I}_{a}\angle 120° = \underline{\mathbf{5.081\angle 73.13° \ A}}$$

Chapter 12, Solution 28.

Let $\mathbf{V}_{ab} = 400\angle 0°$

$$\mathbf{I}_{a} = \frac{\mathbf{V}_{an}\angle -30°}{\sqrt{3}\,\mathbf{Z}_{Y}} = \frac{400\angle -30°}{\sqrt{3}\,(30\angle -60°)} = 7.7\angle 30°$$

$$I_{L} = \left|\mathbf{I}_{a}\right| = \underline{\mathbf{7.7 \ A}}$$

$$\mathbf{V}_{AN} = \mathbf{I}_{a}\,\mathbf{Z}_{Y} = \frac{\mathbf{V}_{an}}{\sqrt{3}}\angle -30° = 230.94\angle -30°$$

$$V_{p} = \left|\mathbf{V}_{AN}\right| = \underline{\mathbf{230.9 \ V}}$$

Chapter 12, Solution 29.

$$P = 3V_pI_p\cos\theta, \qquad V_p = \frac{V_L}{\sqrt{3}}, \qquad I_L = I_p$$

$$P = \sqrt{3}\,V_L I_L \cos\theta$$

$$I_L = \frac{P}{\sqrt{3}\,V_L\cos\theta} = \frac{5000}{240\sqrt{3}\,(0.6)} = 20.05 = I_p$$

$$\left|\mathbf{Z}_Y\right| = \frac{V_p}{I_p} = \frac{V_L}{\sqrt{3}\,I_L} = \frac{240}{\sqrt{3}\,(20.05)} = 6.911$$

$$\cos\theta = 0.6 \longrightarrow \theta = 53.13°$$

$$\mathbf{Z}_Y = 6.911\angle\text{-}53.13° \quad \text{(leading)}$$

$\mathbf{Z}_Y$ = $\underline{\mathbf{4.15 - j5.53\ \Omega}}$

$$S = \frac{P}{pf} = \frac{5000}{0.6} = 8333$$

$$Q = S\sin\theta = 6667$$

S = $\underline{\mathbf{5000 - j6667\ VA}}$

Chapter 12, Solution 30.

Since this a balanced system, we can replace it by a per-phase equivalent, as shown below.

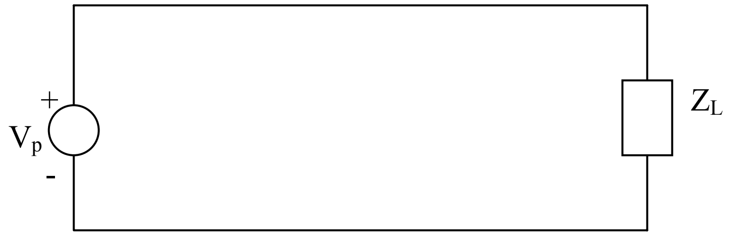

$$\overline{S} = 3\overline{S}_p = \frac{3V^2{}_p}{Z^*{}_p}, \qquad V_p = \frac{V_L}{\sqrt{3}}$$

$$\overline{S} = \frac{V^2{}_L}{Z^*{}_p} = \frac{(208)^2}{30\angle -45^o} = 1.4421\angle 45^o \text{ kVA}$$

$$P = S\cos\theta = \underline{1.02 \text{ kW}}$$

Chapter 12, Solution 31.

(a) $P_p = 6{,}000, \qquad \cos\theta = 0.8, \qquad S_p = \dfrac{P_P}{\cos\theta} = 6/0.8 = 7.5\,\text{kVA}$

$Q_p = S_P \sin\theta = 4.5\,\text{kVAR}$

$\overline{S} = 3\overline{S}_P = 3(6 + j4.5) = 18 + j13.5\,\text{kVA}$

For delta-connected load, $V_p = V_L = 240$ (rms). But

$$\overline{S} = \frac{3V^2{}_p}{Z^*{}_p} \quad \longrightarrow \quad Z^*{}_p = \frac{3V^2{}_p}{S} = \frac{3(240)^2}{(18 + j13.5)x10^3}, \qquad \underline{Z_P = 6.144 + j4.608\Omega}$$

(b) $P_p = \sqrt{3}V_L I_L \cos\theta \quad \longrightarrow \quad I_L = \dfrac{6000}{\sqrt{3}x240x0.8} = \underline{18.04 \text{ A}}$

(c) We find C to bring the power factor to unity

$$Q_c = Q_p = 4.5\,\text{kVA} \quad \longrightarrow \quad C = \frac{Q_c}{\omega V^2{}_{rms}} = \frac{4500}{2\pi x 60 x 240^2} = \underline{207.2\,\mu\text{F}}$$

Chapter 12, Solution 32.

$$\mathbf{S} = \sqrt{3}\,V_L I_L \angle\theta$$

$$S = |\mathbf{S}| = \sqrt{3}\,V_L I_L = 50 \times 10^3$$

$$I_L = \frac{5000}{\sqrt{3}\,(440)} = \underline{\mathbf{65.61\ A}}$$

For a Y-connected load,

$$I_p = I_L = 65.61, \qquad V_p = \frac{V_L}{\sqrt{3}} = \frac{440}{\sqrt{3}} = 254.03$$

$$\left|\mathbf{Z}\right| = \frac{V_p}{I_p} = \frac{254.03}{65.61} = 3.872$$

$$\mathbf{Z} = \left|\mathbf{Z}\right|\angle\theta, \qquad \theta = \cos^{-1}(0.6) = 53.13°$$

$$\mathbf{Z} = (3.872)(\cos\theta + j\sin\theta)$$

$$\mathbf{Z} = (3.872)(0.6 + j0.8)$$

$$\mathbf{Z} = \underline{\mathbf{2.323 + j3.098\ \Omega}}$$

Chapter 12, Solution 33.

$$\mathbf{S} = \sqrt{3}\, V_L I_L \angle\theta$$

$$S = \left|\mathbf{S}\right| = \sqrt{3}\, V_L I_L$$

For a Y-connected load,

$$I_L = I_p, \qquad V_L = \sqrt{3}\, V_p$$

$$S = 3 V_p I_p$$

$$I_L = I_p = \frac{S}{3V_p} = \frac{4800}{(3)(208)} = \underline{\mathbf{7.69\ A}}$$

$$V_L = \sqrt{3}\, V_p = \sqrt{3} \times 208 = \underline{\mathbf{360.3\ V}}$$

Chapter 12, Solution 34.

$$V_p = \frac{V_L}{\sqrt{3}} = \frac{220}{\sqrt{3}}$$

$$\mathbf{I}_a = \frac{V_p}{\mathbf{Z}_Y} = \frac{200}{\sqrt{3}\,(10 - j16)} = 6.73\angle 58°$$

$$I_L = I_p = \underline{\mathbf{6.73\ A}}$$

$$\mathbf{S} = \sqrt{3}\, V_L I_L \angle\theta = \sqrt{3} \times 220 \times 6.73\angle\text{-}58°$$

$$\mathbf{S} = \underline{\mathbf{1359 - j2174.8\ VA}}$$

Chapter 12, Solution 35.

(a) This is a balanced three-phase system and we can use per phase equivalent circuit. The delta-connected load is converted to its wye-connected equivalent

$$Z''_y = \frac{1}{3} Z_\Delta = (60 + j30)/3 = 20 + j10$$

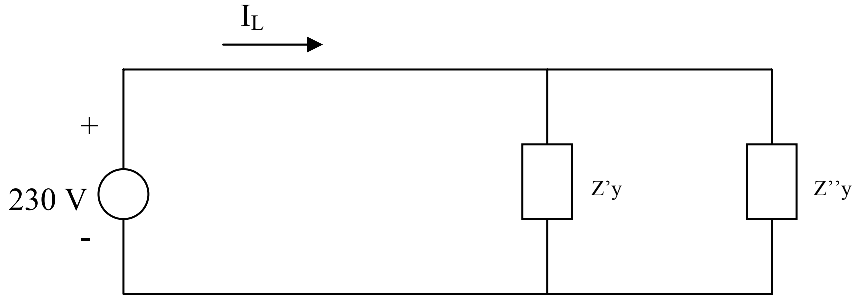

$$Z_y = Z'_y \,//\, Z''_y = (40 + j10)//(20 + j10) = 13.5 + j5.5$$

$$I_L = \frac{230}{13.5 + j5.5} = \underline{14.61 - j5.953\ \text{A}}$$

(b) $\overline{S} = V_s I^*_L = \underline{3.361 + j1.368\ \text{kVA}}$

(c) pf = P/S = $\underline{0.9261}$

Chapter 12, Solution 36.

(a) S = 1 [0.75 + sin(cos^{-1}0.75)] =<u>0.75 + 0.6614 MVA</u>

(b) $\overline{S} = 3V_p I^*{}_p \longrightarrow I^*{}_p = \frac{S}{3V_p} = \frac{(0.75 + j0.6614)x10^6}{3x4200} = 59.52 + j52.49$

$$P_L = |I_p|^2 R_l = (79.36)^2(4) = \underline{25.19\,\text{kW}}$$

(c) $V_s = V_L + I_p(4 + j) = 4.4381 - j0.21\,\text{kV} = \underline{4.443\angle\text{-}2.709^\circ\ \text{kV}}$

Chapter 12, Solution 37.

$$\text{S} = \frac{\text{P}}{\text{pf}} = \frac{12}{0.6} = 20$$

$$\mathbf{S} = \text{S}\angle\theta = 20\angle\theta = 12 - \text{j}16\ \text{kVA}$$

But $\mathbf{S} = \sqrt{3}\,\text{V}_\text{L}\text{I}_\text{L}\angle\theta$

$$\text{I}_\text{L} = \frac{20\times10^3}{\sqrt{3}\times208} = \underline{\mathbf{55.51\ A}}$$

$$\mathbf{S} = 3\left|\mathbf{I}_\text{p}\right|^2\mathbf{Z}_\text{p}$$

For a Y-connected load, $\text{I}_\text{L} = \text{I}_\text{p}$.

$$\mathbf{Z}_\text{p} = \frac{\mathbf{S}}{3\left|\text{I}_\text{L}\right|^2} = \frac{(12 - \text{j}16)\times10^3}{(3)(55.51)^2}$$

$$\mathbf{Z}_\text{p} = \underline{\mathbf{1.298 - j1.731\ \Omega}}$$

Chapter 12, Solution 38.

As a balanced three-phase system, we can use the per-phase equivalent shown below.

$$\mathbf{I}_a = \frac{110\angle 0°}{(1+j2)+(9+j12)} = \frac{110\angle 0°}{10+j14}$$

$$\mathbf{S}_p = \frac{1}{2}\left|\mathbf{I}_a\right|^2 \mathbf{Z}_Y = \frac{1}{2}\cdot\frac{(110)^2}{(10^2+14^2)}\cdot(9+j12)$$

The complex power is

$$\mathbf{S} = 3\mathbf{S}_p = \frac{3}{2}\cdot\frac{(110)^2}{296}\cdot(9+j12)$$

$$\mathbf{S} = \underline{\mathbf{551.86 + j735.81\ VA}}$$

Chapter 12, Solution 39.

Consider the system shown below.

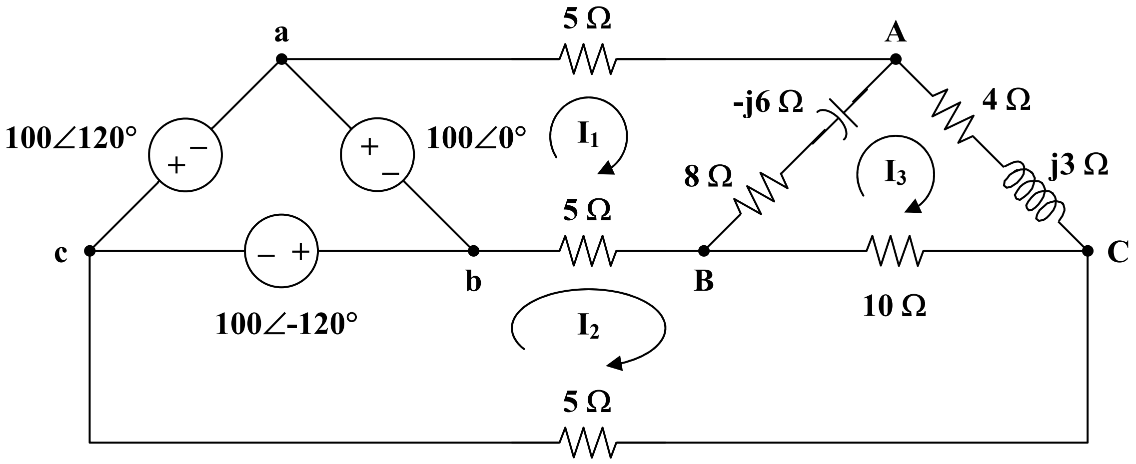

For mesh 1,

$$100 = (18-j6)\mathbf{I}_1 - 5\mathbf{I}_2 - (8-j6)\mathbf{I}_3 \qquad (1)$$

For mesh 2,

$$100\angle\text{-}120° = 20\mathbf{I}_2 - 5\mathbf{I}_1 - 10\mathbf{I}_3$$

$$20\angle\text{-}120° = \text{-}\mathbf{I}_1 + 4\mathbf{I}_2 - 2\mathbf{I}_3 \qquad (2)$$

For mesh 3,

$$0 = -(8 - j6)\mathbf{I}_1 - 10\mathbf{I}_2 + (22 - j3)\mathbf{I}_3 \qquad (3)$$

To eliminate $\mathbf{I}_2$, start by multiplying (1) by 2,

$$200 = (36 - j12)\mathbf{I}_1 - 10\mathbf{I}_2 - (16 - j12)\mathbf{I}_3 \qquad (4)$$

Subtracting (3) from (4),

$$200 = (44 - j18)\mathbf{I}_1 - (38 - j15)\mathbf{I}_3 \qquad (5)$$

Multiplying (2) by $5/4$,

$$25\angle -120° = -1.25\mathbf{I}_1 + 5\mathbf{I}_2 - 2.5\mathbf{I}_3 \qquad (6)$$

Adding (1) and (6),

$$87.5 - j21.65 = (16.75 - j6)\mathbf{I}_1 - (10.5 - j6)\mathbf{I}_3 \qquad (7)$$

In matrix form, (5) and (7) become

$$\begin{bmatrix} 200 \\ 87.5 - j12.65 \end{bmatrix} = \begin{bmatrix} 44 - j18 & -38 + j15 \\ 16.75 - j6 & -10.5 + j6 \end{bmatrix} \begin{bmatrix} \mathbf{I}_1 \\ \mathbf{I}_3 \end{bmatrix}$$

$$\Delta = 192.5 - j26.25, \quad \Delta_1 = 900.25 - j935.2, \quad \Delta_3 = 110.3 - j1327.6$$

$$\mathbf{I}_1 = \frac{\Delta_1}{\Delta} = \frac{1298.1\angle -46.09°}{194.28\angle -7.76°} = 6.682\angle -38.33° = 5.242 - j4.144$$

$$\mathbf{I}_3 = \frac{\Delta_3}{\Delta} = \frac{1332.2\angle -85.25°}{194.28\angle -7.76°} = 6.857\angle -77.49° = 1.485 - j6.694$$

We obtain $\mathbf{I}_2$ from (6),

$$\mathbf{I}_2 = 5\angle -120° + \frac{1}{4}\mathbf{I}_1 + \frac{1}{2}\mathbf{I}_3$$

$$\mathbf{I}_2 = (-2.5 - j4.33) + (1.3104 - j1.0359) + (0.7425 - j3.347)$$
$$\mathbf{I}_2 = -0.4471 - j8.713$$

The average power absorbed by the 8-Ω resistor is

$$P_1 = \left| \mathbf{I}_1 - \mathbf{I}_3 \right|^2 (8) = \left| 3.756 + j2.551 \right|^2 (8) = 164.89 \text{ W}$$

The average power absorbed by the 4-Ω resistor is

$$P_2 = \left| \mathbf{I}_3 \right|^2 (4) = (6.8571)^2 (4) = 188.1 \text{ W}$$

The average power absorbed by the 10-Ω resistor is

$$P_3 = \left| \mathbf{I}_2 - \mathbf{I}_3 \right|^2 (10) = \left| -1.9321 - j2.019 \right|^2 (10) = 78.12 \text{ W}$$

Thus, the total real power absorbed by the load is

$$P = P_1 + P_2 + P_3 = \underline{\mathbf{431.1\ W}}$$

Chapter 12, Solution 40.

Transform the delta-connected load to its wye equivalent.

$$\mathbf{Z}_Y = \frac{\mathbf{Z}_\Delta}{3} = 7 + j8$$

Using the per-phase equivalent circuit above,

$$\mathbf{I}_a = \frac{100\angle 0°}{(1 + j0.5) + (7 + j8)} = 8.567\angle -46.75°$$

For a wye-connected load,

$$I_p = I_a = \left| \mathbf{I}_a \right| = 8.567$$

$$\mathbf{S} = 3\left| \mathbf{I}_p \right|^2 \mathbf{Z}_p = (3)(8.567)^2 (7 + j8)$$

$$P = \text{Re}(\mathbf{S}) = (3)(8.567)^2 (7) = \underline{\mathbf{1.541\ kW}}$$

Chapter 12, Solution 41.

$$S = \frac{P}{pf} = \frac{5 \text{ kW}}{0.8} = 6.25 \text{ kVA}$$

But $\quad S = \sqrt{3}\, V_L I_L$

$$I_L = \frac{S}{\sqrt{3}\, V_L} = \frac{6.25 \times 10^3}{\sqrt{3} \times 400} = \underline{\mathbf{9.021\ A}}$$

Chapter 12, Solution 42.

The load determines the power factor.

$$\tan\theta = \frac{40}{30} = 1.333 \quad \longrightarrow \quad \theta = 53.13°$$

$$\text{pf} = \cos\theta = 0.6 \quad \text{(leading)}$$

$$\mathbf{S} = 7.2 - j\left(\frac{7.2}{0.6}\right)(0.8) = 7.2 - j9.6 \text{ kVA}$$

But $\quad \mathbf{S} = 3\left|\mathbf{I}_p\right|^2 \mathbf{Z}_p$

$$\left|\mathbf{I}_p\right|^2 = \frac{\mathbf{S}}{3\mathbf{Z}_p} = \frac{(7.2 - j9.6)\times 10^3}{(3)(30 - j40)} = 80$$

$$I_p = 8.944 \text{ A}$$

$$I_L = I_p = \underline{\mathbf{8.944\ A}}$$

$$V_L = \frac{S}{\sqrt{3}\, I_L} = \frac{12\times 10^3}{\sqrt{3}\,(8.944)} = \underline{\mathbf{774.6\ V}}$$

Chapter 12, Solution 43.

$\mathbf{S} = 3\left|\mathbf{I}_p\right|^2 \mathbf{Z}_p, \qquad I_p = I_L$ for Y-connected loads

$$\mathbf{S} = (3)(13.66)^2(7.812 - j2.047)$$

$$\mathbf{S} = \underline{\mathbf{4.373 - j1.145\ kVA}}$$

Chapter 12, Solution 44.

For a Δ-connected load,

$$V_p = V_L, \qquad I_L = \sqrt{3}\, I_p$$

$$S = \sqrt{3}\, V_L I_L$$

$$I_L = \frac{S}{\sqrt{3}\, V_L} = \frac{\sqrt{(12^2 + 5^2)} \times 10^3}{\sqrt{3}\,(240)} = 31.273$$

At the source,

$$\mathbf{V}_L' = \mathbf{V}_L + \mathbf{I}_L\, \mathbf{Z}_L$$
$$\mathbf{V}_L' = 240\angle 0° + (31.273)(1 + j3)$$
$$\mathbf{V}_L' = 271.273 + j93.819$$
$$\left|\mathbf{V}_L'\right| = \underline{\mathbf{287.04\ V}}$$

Also, at the source,

$$\mathbf{S}' = \sqrt{3}\mathbf{V}_L'\mathbf{I}_L^*$$
$$\mathbf{S}' = \sqrt{3}\,(271.273 + j93.819)(31.273)$$

$$\theta = \tan^{-1}\left(\frac{93.819}{271.273}\right) = 19.078$$

$$\text{pf} = \cos\theta = \underline{\mathbf{0.9451}}$$

Chapter 12, Solution 45.

$$\mathbf{S} = \sqrt{3}\, V_L I_L \angle\theta$$

$$I_L = \frac{\left|\mathbf{S}\right|\angle -\theta}{\sqrt{3}\, V_L}, \qquad \left|\mathbf{S}\right| = \frac{P}{\text{pf}} = \frac{450 \times 10^3}{0.708} = 635.6\ \text{kVA}$$

$$\mathbf{I}_L = \frac{(635.6)\angle -\theta}{\sqrt{3} \times 440} = 834\angle -45°\ \text{A}$$

At the source,

$$\mathbf{V}_L = 440\angle 0° + \mathbf{I}_L\,(0.5 + j2)$$

$$\mathbf{V}_L = 440 + (834\angle -45°)(2.062\angle 76°)$$
$$\mathbf{V}_L = 440 + 1719.7\angle 31°$$
$$\mathbf{V}_L = 1914.1 + j885.7$$
$$\mathbf{V}_L = \underline{\mathbf{2.109\angle 24.83°\ V}}$$

Chapter 12, Solution 46.

For the wye-connected load,

$$I_L = I_p, \qquad V_L = \sqrt{3}\, V_p \qquad I_p = V_p / \mathbf{Z}$$

$$\mathbf{S} = 3\mathbf{V}_p \mathbf{I}_p^* = \frac{3|\mathbf{V}_p|^2}{\mathbf{Z}^*} = \frac{3|\mathbf{V}_L/\sqrt{3}|^2}{\mathbf{Z}^*}$$

$$\mathbf{S} = \frac{|\mathbf{V}_L|^2}{\mathbf{Z}^*} = \frac{(110)^2}{100} = 121\ \text{W}$$

For the delta-connected load,

$$V_p = V_L, \qquad I_L = \sqrt{3}\, I_p, \qquad I_p = V_p / \mathbf{Z}$$

$$\mathbf{S} = 3\mathbf{V}_p \mathbf{I}_p^* = \frac{3|\mathbf{V}_p|^2}{\mathbf{Z}^*} = \frac{3|\mathbf{V}_L|^2}{\mathbf{Z}^*}$$

$$\mathbf{S} = \frac{(3)(110)^2}{100} = 363\ \text{W}$$

This shows that the **delta-connected load** will deliver three times more average power than the wye-connected load. This is also evident from $\mathbf{Z}_Y = \dfrac{\mathbf{Z}_\Delta}{3}$.

Chapter 12, Solution 47.

$$\text{pf} = 0.8 \quad (\text{lagging}) \longrightarrow \theta = \cos^{-1}(0.8) = 36.87°$$
$$\mathbf{S}_1 = 250\angle 36.87° = 200 + j150\ \text{kVA}$$

$$\text{pf} = 0.95 \quad (\text{leading}) \longrightarrow \theta = \cos^{-1}(0.95) = -18.19°$$
$$\mathbf{S}_2 = 300\angle -18.19° = 285 - j93.65\ \text{kVA}$$

$\text{pf} = 1.0 \longrightarrow \theta = \cos^{-1}(1) = 0°$
$\mathbf{S}_3 = 450 \text{ kVA}$

$$\mathbf{S}_T = \mathbf{S}_1 + \mathbf{S}_2 + \mathbf{S}_3 = 935 + j56.35 = 936.7\angle 3.45° \text{ kVA}$$

$$|\mathbf{S}_T| = \sqrt{3}\, V_L I_L$$

$$I_L = \frac{936.7 \times 10^3}{\sqrt{3}\,(13.8 \times 10^3)} = \underline{\mathbf{39.19 \text{ A rms}}}$$

$$\text{pf} = \cos\theta = \cos(3.45°) = \underline{\mathbf{0.9982 \quad (lagging)}}$$

Chapter 12, Solution 48.

(a) We first convert the delta load to its equivalent wye load, as shown below.

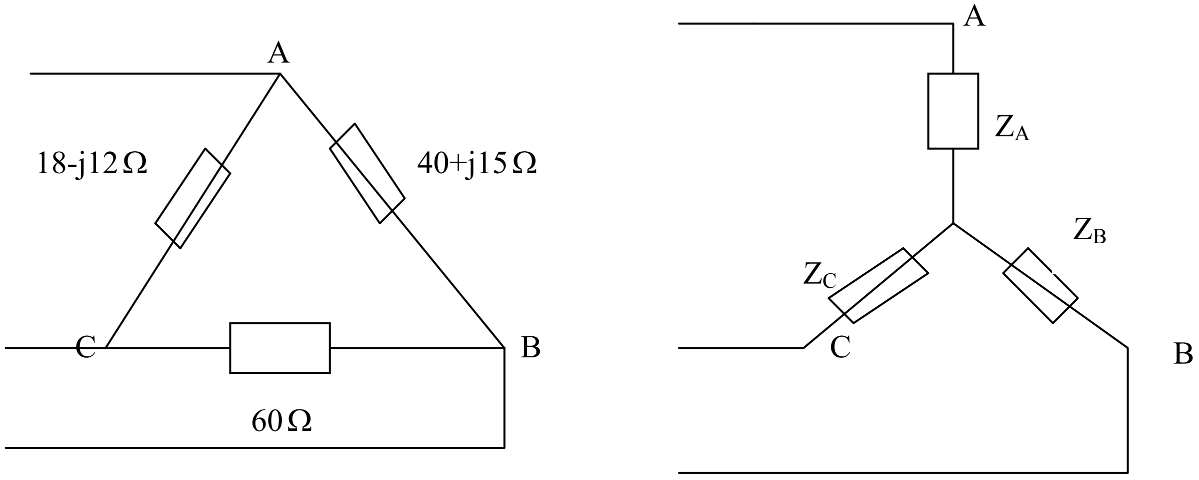

$$Z_A = \frac{(40 + j15)(18 - j12)}{118 + j3} = 7.577 - j1.923$$

$$Z_B = \frac{60(40 + j15).}{118 + j3} = 20.52 - j7.105$$

$$Z_C = \frac{60(18 - j12)}{118 + j3} = 8.992 - j6.3303$$

The system becomes that shown below.

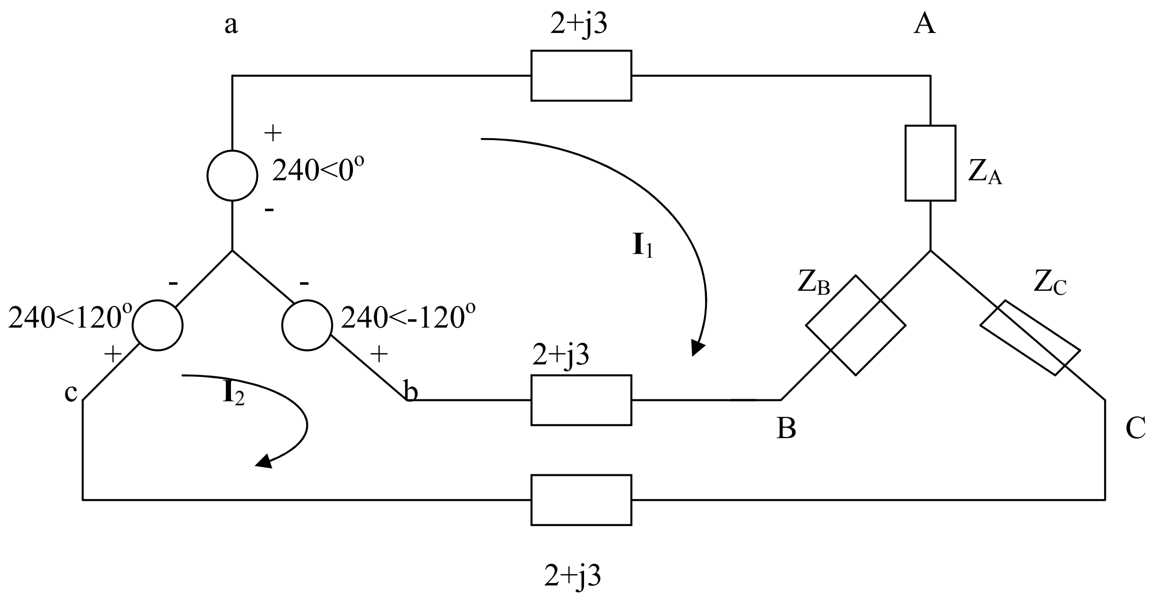

We apply KVL to the loops. For mesh 1,

$$-240 + 240\angle -120^o + I_1(2Z_l + Z_A + Z_B) - I_2(Z_B + Z_l) = 0$$

or

$$(32.097 + j11.13)I_1 - (22.52 + j10.105)I_2 = 360 + j207.85 \qquad (1)$$

For mesh 2,

$$240\angle 120^o - 240\angle -120^o - I_1(Z_B + Z_l) + I_2(2Z_l + Z_B + Z_C) = 0$$

or

$$-(22.52 + j10.105)I_1 + (33.51 + j6.775)I_2 = -j415.69 \qquad (2)$$

Solving (1) and (2) gives

$I_1 = 23.75 - j5.328, \qquad I_2 = 15.165 - j11.89$

$I_{aA} = I_1 = \underline{24.34\angle -12.64^o \text{ A}}, \qquad I_{bB} = I_2 - I_1 = \underline{10.81\angle -142.6^o \text{ A}}$

$I_{cC} = -I_2 = \underline{19.27\angle 141.9^o \text{ A}}$

(b)

$$\overline{S}_a = (240\angle 0^o)(24.34\angle 12.64^o) = 5841.6\angle 12.64^o$$

$$\overline{S}_b = (240\angle -120^o)(10.81\angle 142.6^o) = 2594.4\angle 22.6^o$$

$$\overline{S}_b = (240\angle 120^o)(19.27\angle -141.9^o) = 4624.8\angle -21.9^o$$

$$\overline{S} = \overline{S}_a + \overline{S}_b + \overline{S}_c = 12.386 + j0.55 \text{ kVA} = \underline{12.4\angle 2.54^o \text{ kVA}}$$

Chapter 12, Solution 49.

(a) For the delta-connected load, $Z_p = 20 + j10\Omega, \quad V_p = V_L = 220 \text{ (rms)}$,

$$S = \frac{3V^2{}_p}{Z^*{}_p} = \frac{3x220^2}{(20 - j10)} = 5808 + j2904 = \underline{6.943\angle 26.56^o \text{ kVA}}$$

(b) For the wye-connected load, $Z_p = 20 + j10\Omega, \quad V_p = V_L / \sqrt{3}$,

$$S = \frac{3V^2{}_p}{Z^*{}_p} = \frac{3x220^2}{3(20 - j10)} = \underline{2.164\angle 26.56^o \text{ kVA}}$$

Chapter 12, Solution 50.

$\overline{S} = \overline{S}_1 + \overline{S}_2 = 8(0.6 + j0.8) = 4.8 + j6.4 \text{ kVA}, \qquad \overline{S}_1 = 3 \text{ kVA}$

Hence,

$$\overline{S}_2 = \overline{S} - \overline{S}_1 = 1.8 + j6.4 \text{ kVA}$$

But $\overline{S}_2 = \frac{3V^2{}_p}{Z^*{}_p}, \quad V_p = \frac{V_L}{\sqrt{3}} \longrightarrow \overline{S}_2 = \frac{.V^2{}_L}{Z^*{}_p}$

$$Z^*{}_p = \frac{V^*{}_L}{\overline{S}_2} = \frac{240^2}{(1.8 + j6.4)x10^3} \longrightarrow \underline{Z_p = 2.346 + j8.34\Omega}$$

Chapter 12, Solution 51.

Apply mesh analysis to the circuit as shown below.

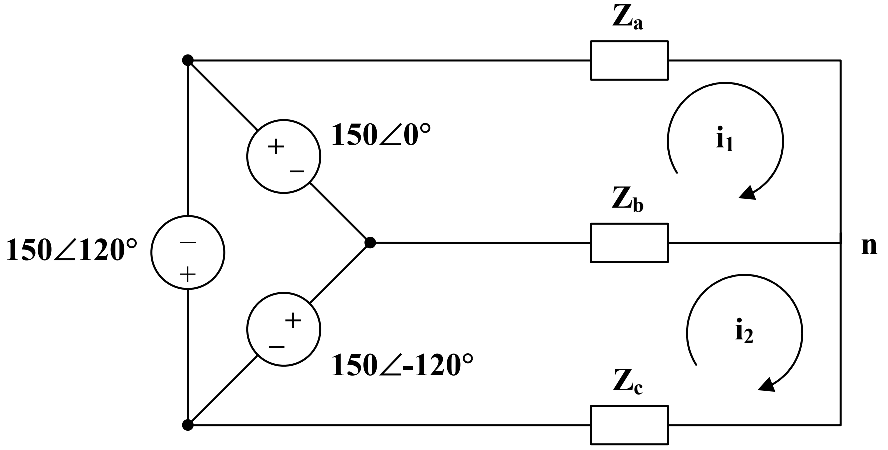

For mesh 1,

$$-150 + (\mathbf{Z}_a + \mathbf{Z}_b)\mathbf{I}_1 - \mathbf{Z}_b\,\mathbf{I}_2 = 0$$

$$150 = (18 + j)\mathbf{I}_1 - (12 + j9)\mathbf{I}_2 \qquad (1)$$

For mesh 2,

$$-150\angle -120° + (\mathbf{Z}_b + \mathbf{Z}_c)\mathbf{I}_2 - \mathbf{Z}_b\,\mathbf{I}_1 = 0$$

$$150\angle -120° = (27 + j9)\mathbf{I}_2 - (12 + j9)\mathbf{I}_1 \qquad (2)$$

From (1) and (2),

$$\begin{bmatrix} 150 \\ 150\angle -120° \end{bmatrix} = \begin{bmatrix} 18 + j & -12 - j9 \\ -12 - j9 & 27 + j9 \end{bmatrix} \begin{bmatrix} \mathbf{I}_1 \\ \mathbf{I}_2 \end{bmatrix}$$

$$\Delta = 414 - j27, \quad \Delta_1 = 3780.9 + j3583.8, \quad \Delta_2 = 579.9 - j1063.2$$

$$\mathbf{I}_1 = \frac{\Delta_1}{\Delta} = \frac{5209.5\angle 43.47°}{414.88\angle -3.73°} = 12.56\angle 47.2°$$

$$\mathbf{I}_2 = \frac{\Delta_2}{\Delta} = \frac{1211.1\angle -61.39°}{414.88\angle -3.73°} = 2.919\angle -57.66°$$

$$\mathbf{I}_a = \mathbf{I}_1 = \underline{\mathbf{12.56\angle 47.2°\ A}}$$

$$\mathbf{I}_b = \mathbf{I}_2 - \mathbf{I}_1 = \frac{\Delta_2 - \Delta_1}{\Delta} = \frac{-3201 - j4647}{\Delta}$$

$$\mathbf{I}_b = \frac{5642.3\angle 235.44°}{414.88\angle -3.73°} = \underline{\mathbf{13.6\angle 239.17°\ A}}$$

$$\mathbf{I}_c = -\mathbf{I}_2 = \underline{\mathbf{2.919\angle 122.34°\ A}}$$

Chapter 12, Solution 52.

Since the neutral line is present, we can solve this problem on a per-phase basis.

$$\mathbf{I}_a = \frac{\mathbf{V}_{an}}{\mathbf{Z}_{AN}} = \frac{120\angle 120°}{20\angle 60°} = 6\angle 60°$$

$$\mathbf{I}_b = \frac{\mathbf{V}_{bn}}{\mathbf{Z}_{BN}} = \frac{120\angle 0°}{30\angle 0°} = 4\angle 0°$$

$$\mathbf{I}_c = \frac{\mathbf{V}_{cn}}{\mathbf{Z}_{CN}} = \frac{120\angle -120°}{40\angle 30°} = 3\angle -150°$$

Thus,

$$-\mathbf{I}_n = \mathbf{I}_a + \mathbf{I}_b + \mathbf{I}_c$$
$$-\mathbf{I}_n = 6\angle 60° + 4\angle 0° + 3\angle -150°$$
$$-\mathbf{I}_n = (3 + j5.196) + (4) + (-2.598 - j1.5)$$
$$-\mathbf{I}_n = 4.405 + j3.696 = 5.75\angle 40°$$

$$\mathbf{I}_n = \underline{\mathbf{5.75\angle 220°\ A}}$$

Chapter 12, Solution 53.

$$V_p = \frac{250}{\sqrt{3}}$$

Since we have the neutral line, we can use per-phase equivalent circuit for each phase.

$$\mathbf{I}_a = \frac{250\angle 0°}{\sqrt{3}} \cdot \frac{1}{40\angle 60°} = \underline{\mathbf{3.608\angle -60°\ A}}$$

$$\mathbf{I}_b = \frac{250\angle -120°}{\sqrt{3}} \cdot \frac{1}{60\angle -45°} = \underline{\mathbf{2.406\angle -75°\ A}}$$

$$\mathbf{I}_c = \frac{250\angle 120°}{\sqrt{3}} \cdot \frac{1}{20\angle 0°} = \underline{\mathbf{7.217\angle 120°\ A}}$$

$$-\mathbf{I}_n = \mathbf{I}_a + \mathbf{I}_b + \mathbf{I}_c$$
$$-\mathbf{I}_n = (1.804 - j3.125) + (0.6227 - j2.324) + (-3.609 + j6.25)$$

$$\mathbf{I}_n = 1.1823 - j0.801 = \underline{\mathbf{1.428\ \angle -34.12°\ A}}$$

Chapter 12, Solution 54.

Consider the circuit shown below.

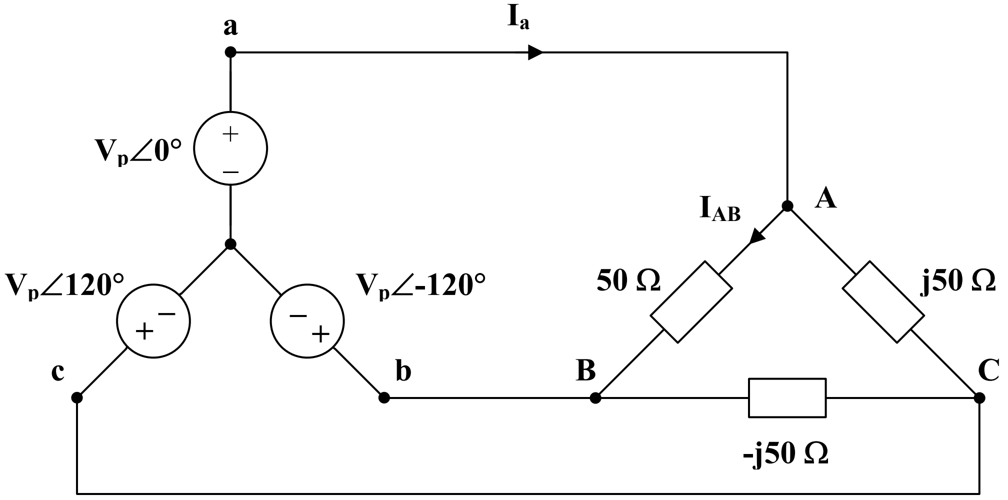

$$V_{AB} = V_{ab} = 100 \times \sqrt{3}\angle 30°$$

$$I_{AB} = \frac{V_{AB}}{Z_{AB}} = \frac{100\sqrt{3}\angle 30°}{50} = \underline{\mathbf{3.464\angle 30°\ A}}$$

$$I_{BC} = \frac{V_{BC}}{Z_{BC}} = \frac{100\sqrt{3}\angle -90°}{50\angle -90°} = \underline{\mathbf{3.464\angle 0°\ A}}$$

$$I_{CA} = \frac{V_{CA}}{Z_{CA}} = \frac{100\sqrt{3}\angle 150°}{50\angle 90°} = \underline{\mathbf{3.464\angle 60°\ A}}$$

Chapter 12, Solution 55.

Consider the circuit shown below.

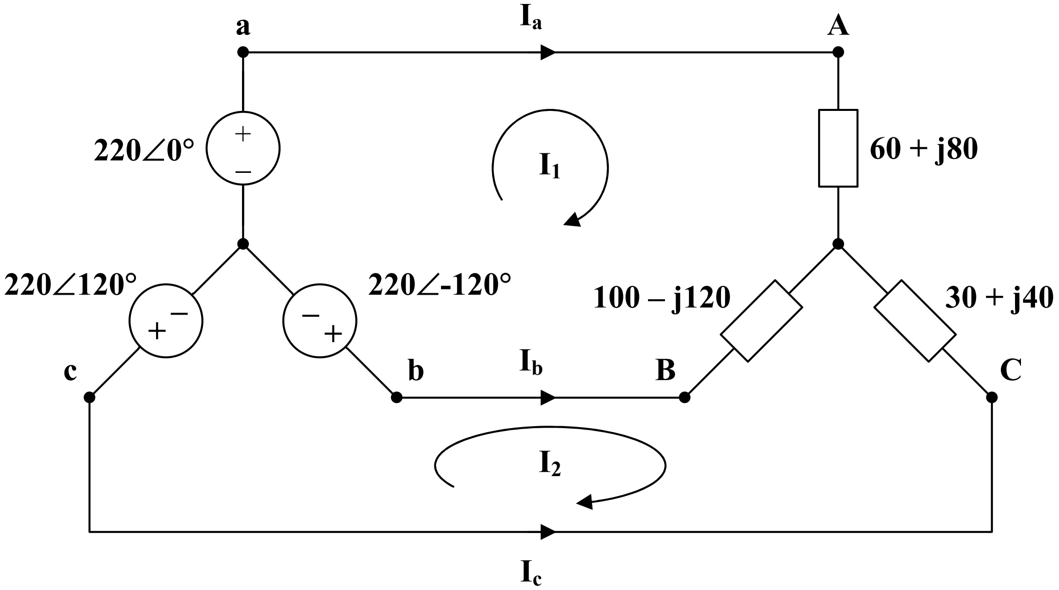

For mesh 1,

$$220\angle\text{-}120° - 220\angle 0° + (160 - j40)\mathbf{I}_1 - (100 - j120)\mathbf{I}_2 = 0$$

$$11 - 11\angle\text{-}120° = (8 - j2)\mathbf{I}_1 - (5 - j6)\mathbf{I}_2 \qquad (1)$$

For mesh 2,

$$220\angle 120° - 220\angle\text{-}120° + (130 - j80)\mathbf{I}_2 - (100 - j120)\mathbf{I}_1 = 0$$

$$11\angle\text{-}120° - 11\angle 120° = \text{-}(5 - j6)\mathbf{I}_1 + (6.5 - j4)\mathbf{I}_2 \qquad (2)$$

From (1) and (2),

$$\begin{bmatrix} 16.5 + j9.526 \\ \text{-}j19.053 \end{bmatrix} = \begin{bmatrix} 8 - j2 & \text{-}5 + j6 \\ \text{-}5 + j6 & 6.5\text{-}j4 \end{bmatrix} \begin{bmatrix} \mathbf{I}_1 \\ \mathbf{I}_2 \end{bmatrix}$$

$$\Delta = 55 + j15, \quad \Delta_1 = 31.04 - j99.35, \quad \Delta_2 = 101.55 - j203.8$$

$$\mathbf{I}_1 = \frac{\Delta_1}{\Delta} = \frac{104.08\angle\text{-}72.65°}{57.01\angle 15.26°} = 1.8257\angle\text{-}87.91°$$

$$\mathbf{I}_2 = \frac{\Delta_2}{\Delta} = \frac{227.7\angle\text{-}63.51°}{57.01\angle 15.26°} = 3.994\angle\text{-}78.77°$$

$$\mathbf{I}_a = \mathbf{I}_1 = 1.8257\angle\text{-}87.91°$$

$$\mathbf{I}_b = \mathbf{I}_2 - \mathbf{I}_1 = \frac{\Delta_2 - \Delta_1}{\Delta} = \frac{70.51 - j104.45}{55 + j15} = 2.211\angle\text{-}71.23°$$

$$\mathbf{I}_c = \text{-}\mathbf{I}_2 = 3.994\angle 101.23°$$

$$\mathbf{S}_A = \left|\mathbf{I}_a\right|^2 \mathbf{Z}_{AN} = (1.8257)^2(60 + j80) = 199.99 + j266.7$$
$$\mathbf{S}_B = \left|\mathbf{I}_b\right|^2 \mathbf{Z}_{BN} = (2.211)^2(100 - j120) = 488.9 - j586.6$$
$$\mathbf{S}_C = \left|\mathbf{I}_c\right|^2 \mathbf{Z}_{CN} = (3.994)^2(30 + j40) = 478.6 + j638.1$$

$$\mathbf{S} = \mathbf{S}_A + \mathbf{S}_B + \mathbf{S}_C = \underline{\mathbf{1167.5 + j318.2\ VA}}$$

Chapter 12, Solution 56.

(a) Consider the circuit below.

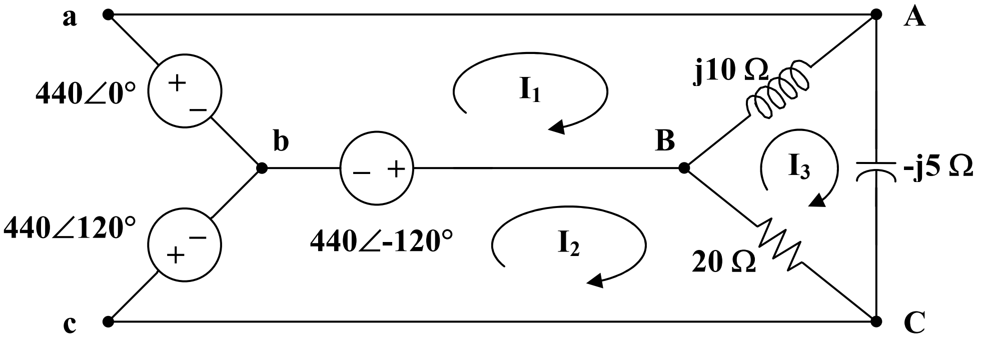

For mesh 1,

$$440\angle\text{-}120° - 440\angle 0° + j10(\mathbf{I}_1 - \mathbf{I}_3) = 0$$

$$\mathbf{I}_1 - \mathbf{I}_3 = \frac{(440)(1.5 + j0.866)}{j10} = 76.21\angle\text{-}60° \qquad (1)$$

For mesh 2,

$$440\angle 120° - 440\angle\text{-}120° + 20(\mathbf{I}_2 - \mathbf{I}_3) = 0$$

$$\mathbf{I}_3 - \mathbf{I}_2 = \frac{(440)(j1.732)}{20} = j38.1 \qquad (2)$$

For mesh 3,

$$j10(\mathbf{I}_3 - \mathbf{I}_1) + 20(\mathbf{I}_3 - \mathbf{I}_2) - j5\mathbf{I}_3 = 0$$

Substituting (1) and (2) into the equation for mesh 3 gives,

$$\mathbf{I}_3 = \frac{(440)(-1.5 + j0.866)}{j5} = 152.42\angle 60° \qquad (3)$$

From (1),

$$\mathbf{I}_1 = \mathbf{I}_3 + 76.21\angle -60° = 114.315 + j66 = 132\angle 30°$$

From (2),

$$\mathbf{I}_2 = \mathbf{I}_3 - j38.1 = 76.21 + j93.9 = 120.93\angle 50.94°$$

$$\mathbf{I}_a = \mathbf{I}_1 = \underline{\mathbf{132\angle 30°\ A}}$$

$$\mathbf{I}_b = \mathbf{I}_2 - \mathbf{I}_1 = -38.105 + j27.9 = \underline{\mathbf{47.23\angle 143.8°\ A}}$$

$$\mathbf{I}_c = -\mathbf{I}_2 = \underline{\mathbf{120.9\angle 230.9°\ A}}$$

(b) $\mathbf{S}_{AB} = \left|\mathbf{I}_1 - \mathbf{I}_3\right|^2 (j10) = j58.08\text{ kVA}$

$\mathbf{S}_{BC} = \left|\mathbf{I}_2 - \mathbf{I}_3\right|^2 (20) = 29.04\text{ kVA}$

$\mathbf{S}_{CA} = \left|\mathbf{I}_3\right|^2 (-j5) = (152.42)^2 (-j5) = -j116.16\text{ kVA}$

$\mathbf{S} = \mathbf{S}_{AB} + \mathbf{S}_{BC} + \mathbf{S}_{CA} = 29.04 - j58.08\text{ kVA}$

Real power absorbed = $\underline{\mathbf{29.04\ kW}}$

(c) Total complex supplied by the source is

$$\mathbf{S} = \underline{\mathbf{29.04 - j58.08\ kVA}}$$

Chapter 12, Solution 57.

We apply mesh analysis to the circuit shown below.

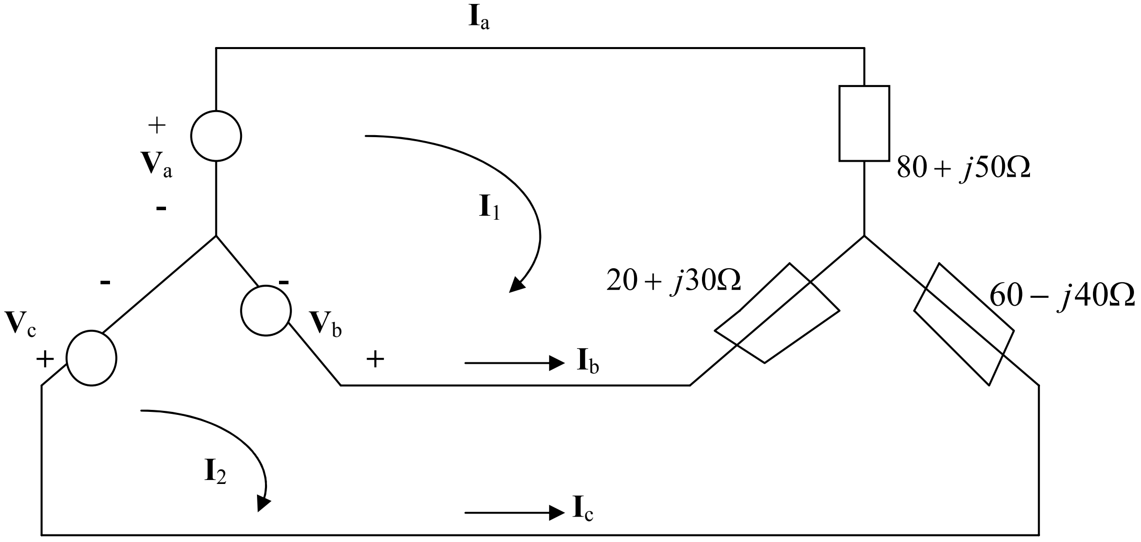

$$(100+j80)I_1-(20+j30)I_2=V_a-V_b=165+j95.263 \qquad (1)$$
$$-(20+j30)I_1+(80-j10)I_2=V_b-V_c=-j190.53 \qquad (2)$$

Solving (1) and (2) gives $I_1=1.8616-j0.6084, \quad I_2=0.9088-j1.722$.

$I_a=I_1=\underline{1.9585\angle-18.1^o \text{ A}}, \quad I_b=I_2-I_1=-0.528-j1.1136=\underline{1.4656\angle-130.55^o \text{ A}}$

$I_c=-I_2=\underline{1.947\angle117.8^o \text{ A}}$

Chapter 12, Solution 58.

The schematic is shown below. IPRINT is inserted in the neutral line to measure the current through the line. In the AC Sweep box, we select Total Ptss = 1, Start Freq. = 0.1592, and End Freq. = 0.1592. After simulation, the output file includes

FREQ	IM(V_PRINT4)	IP(V_PRINT4)
1.592 E–01	1.078 E+01	–8.997 E+01

i.e. I_n = **10.78∠–89.97° A**

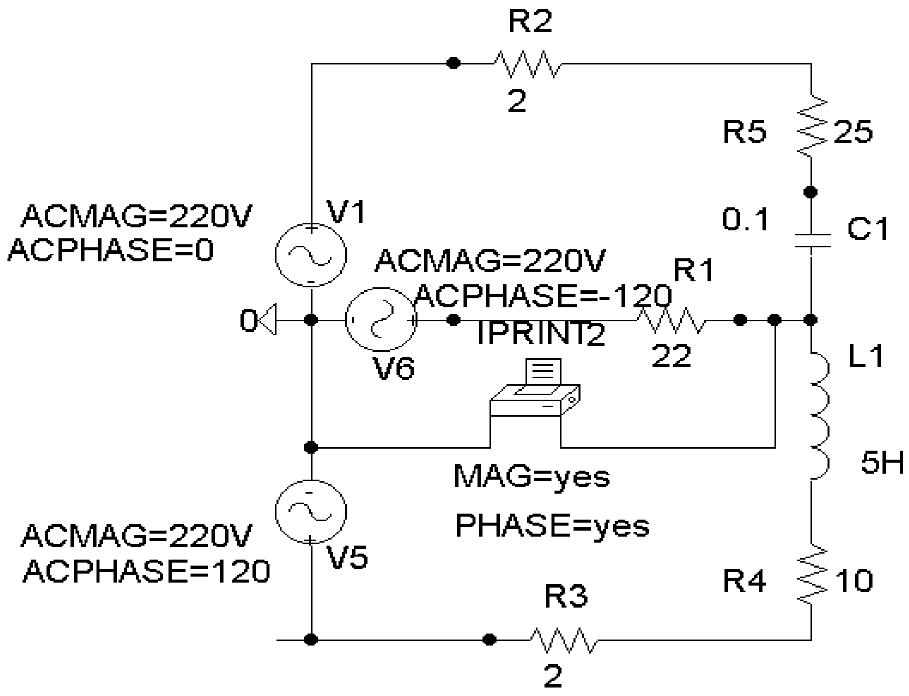

Chapter 12, Solution 59.

The schematic is shown below. In the AC Sweep box, we set Total Pts = 1, Start Freq = 60, and End Freq = 60. After simulation, we obtain an output file which includes

FREQ	VM(1)	VP(1)
6.000 E+01	2.206 E+02	–3.456 E+01
FREQ	VM(2)	VP(2)
6.000 E+01	2.141 E+02	–8.149 E+01
FREQ	VM(3)	VP(3)
6.000 E+01	4.991 E+01	–5.059 E+01

i.e. V_{AN} = **220.6∠–34.56°**, V_{BN} = **214.1∠–81.49°**, V_{CN} = **49.91∠–50.59° V**

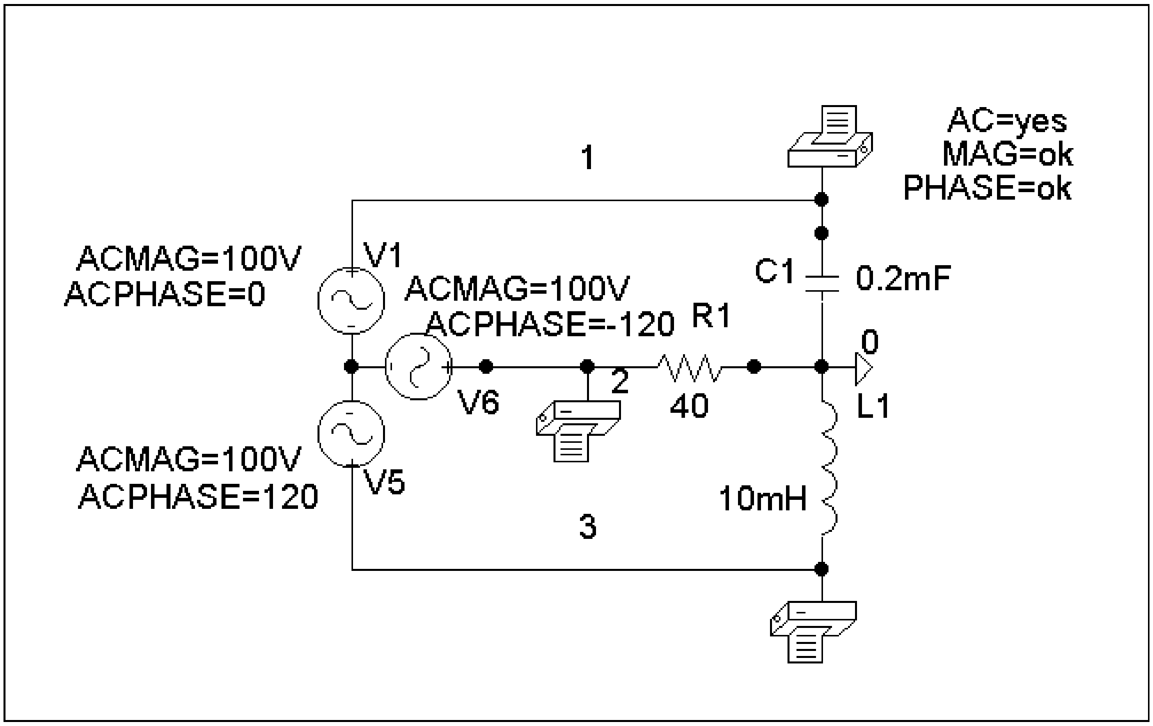

Chapter 12, Solution 60.

The schematic is shown below. IPRINT is inserted to give I_o. We select Total Pts = 1, Start Freq = 0.1592, and End Freq = 0.1592 in the AC Sweep box. Upon simulation, the output file includes

FREQ	IM(V_PRINT4)	IP(V_PRINT4)
1.592 E–01	1.421 E+00	–1.355 E+02

from which, I_o = **$\underline{1.421\angle{-135.5^\circ}\text{ A}}$**

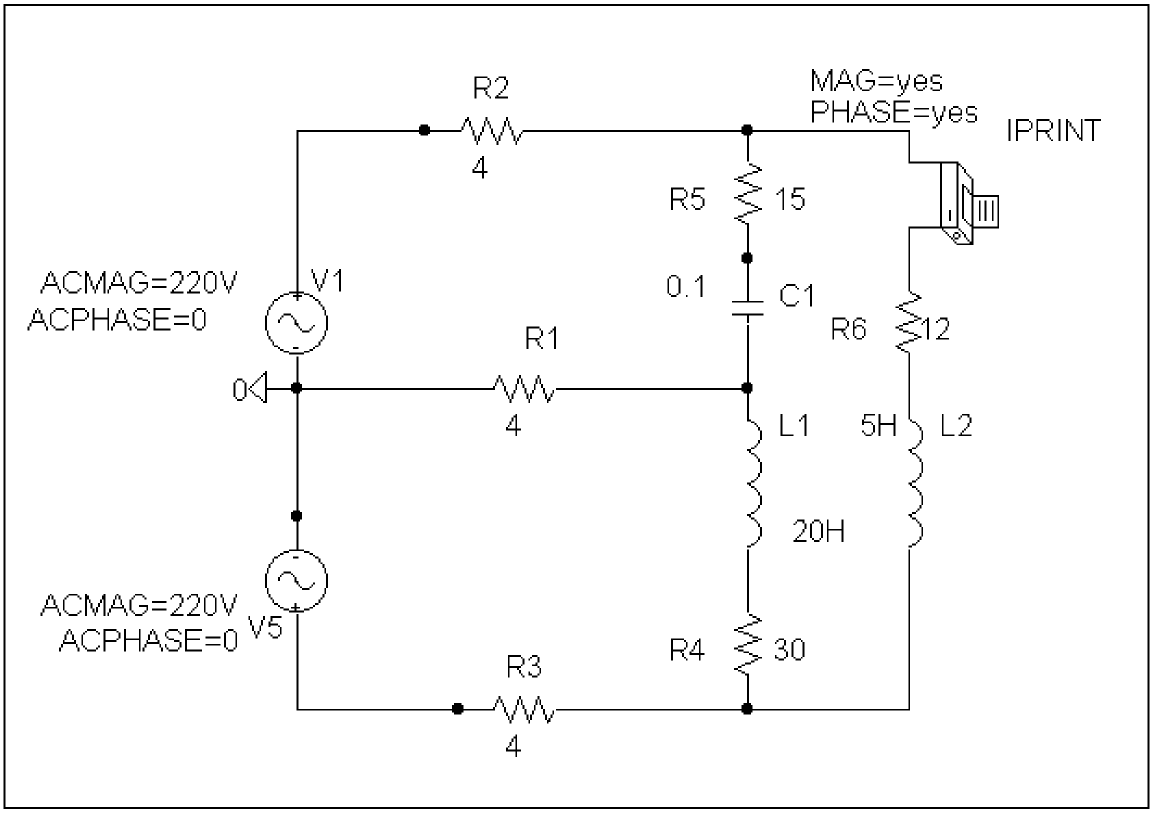

Chapter 12, Solution 61.

The schematic is shown below. Pseudocomponents IPRINT and PRINT are inserted to measure I_{aA} and V_{BN}. In the AC Sweep box, we set Total Pts = 1, Start Freq = 0.1592, and End Freq = 0.1592. Once the circuit is simulated, we get an output file which includes

FREQ	VM(2)	VP(2)
1.592 E–01	2.308 E+02	–1.334 E+02

FREQ	IM(V_PRINT2)	IP(V_PRINT2)
1.592 E–01	1.115 E+01	3.699 E+01

from which

$$I_{aA} = \underline{\mathbf{11.15\angle 37^\circ\ A}}, \quad V_{BN} = \underline{\mathbf{230.8\angle -133.4^\circ\ V}}$$

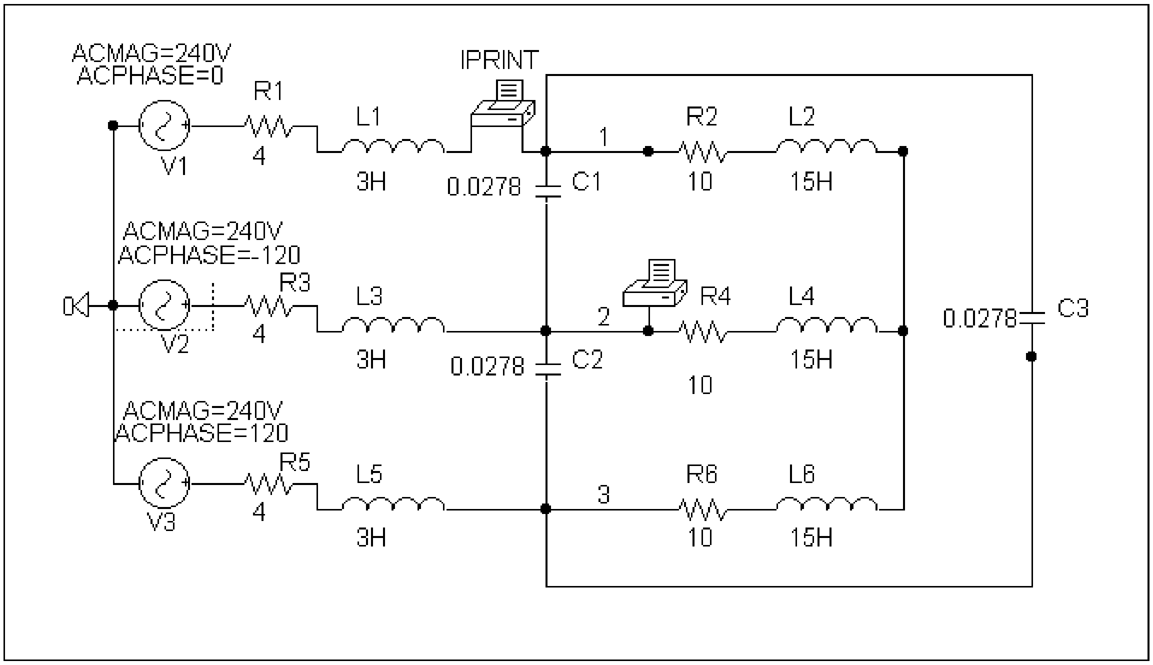

Chapter 12, Solution 62.

Because of the delta-connected source involved, we follow Example 12.12. In the AC Sweep box, we type Total Pts = 1, Start Freq = 60, and End Freq = 60. After simulation, the output file includes

FREQ	IM(V_PRINT2)	IP(V_PRINT2)
6.000 E+01	5.960 E+00	–9.141 E+01
FREQ	IM(V_PRINT1)	IP(V_PRINT1)
6.000 E+01	7.333 E+07	1.200 E+02

From which

$$I_{ab} = \underline{\mathbf{7.333x10^7\angle 120^\circ\ A}},\quad I_{bB} = \underline{\mathbf{5.96\angle -91.41^\circ\ A}}$$

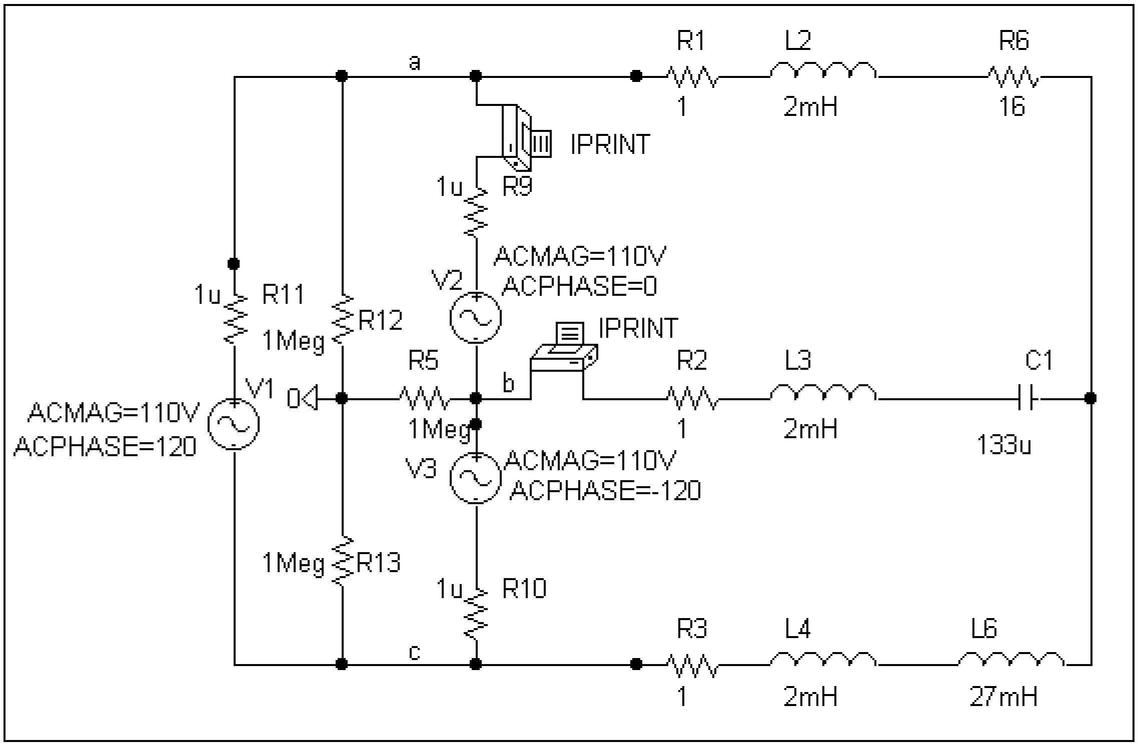

a
R1
1
L2
2mH
R6
16
IPRINT
1u
R9
ACMAG=110V
ACPHASE=0
V2
1u
R11
R12
1Meg
IPRINT
R5
R2
1
L3
2mH
C1
133u
V1
ACMAG=110V
ACPHASE=120
0
b
1Meg
V3
ACMAG=110V
ACPHASE=-120
1Meg
R13
1u
R10
c
R3
1
L4
2mH
L6
27mH

Chapter 12, Solution 63.

Let $\omega = 1$ so that $L = X/\omega = 20\,\text{H}$, and $C = \dfrac{1}{\omega X} = 0.0333\,\text{F}$

The schematic is shown below..

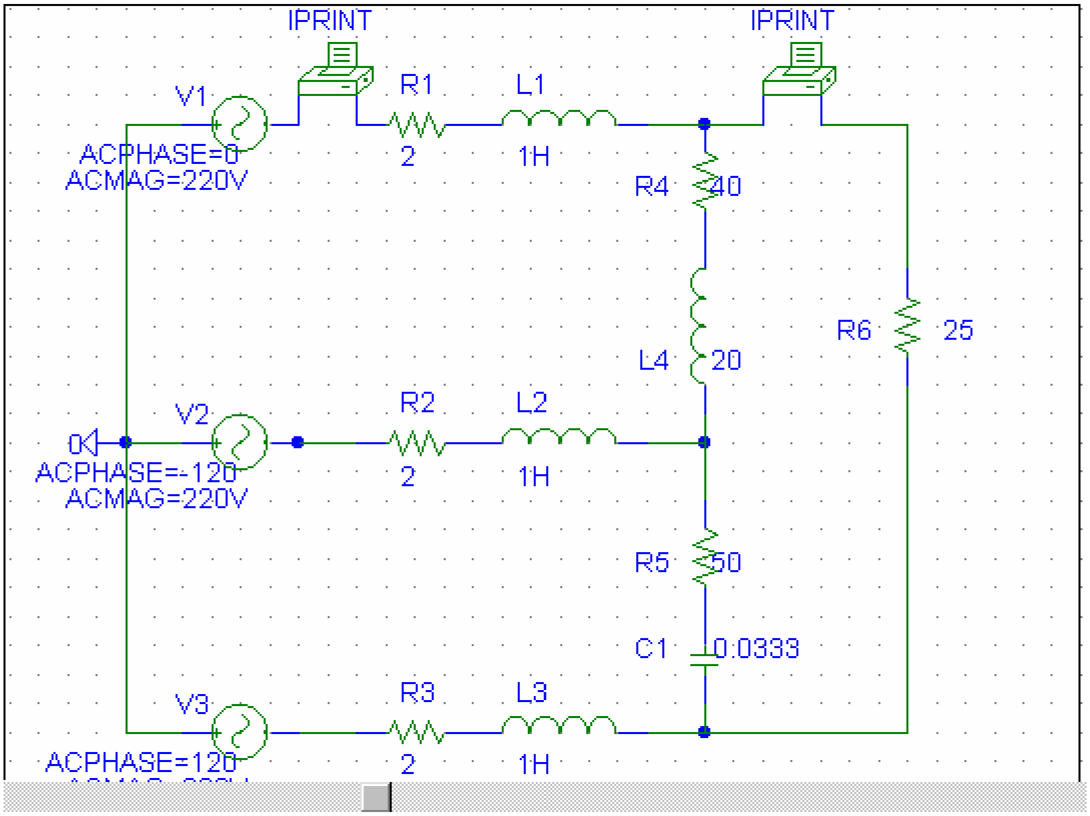

When the file is saved and run, we obtain an output file which includes the following:

```
FREQ          IM(V_PRINT1)IP(V_PRINT1)
 1.592E-01    1.867E+01    1.589E+02
FREQ          IM(V_PRINT2)IP(V_PRINT2)
 1.592E-01    1.238E+01    1.441E+02
```

From the output file, the required currents are:

$\underline{I_{aA} = 18.67\angle 158.9^o \ \text{A}, \ \ I_{AC} = 12.38\angle 144.1^o \ \text{A}}$

Chapter 12, Solution 64.

We follow Example 12.12. In the AC Sweep box we type Total Pts = 1, Start Freq = 0.1592, and End Freq = 0.1592. After simulation the output file includes

FREQ	IM(V_PRINT1)	IP(V_PRINT1)
1.592 E–01	4.710 E+00	7.138 E+01
FREQ	IM(V_PRINT2)	IP(V_PRINT2)
1.592 E–01	6.781 E+07	–1.426 E+02
FREQ	IM(V_PRINT3)	IP(V_PRINT3)
1.592 E–01	3.898 E+00	–5.076 E+00
FREQ	IM(V_PRINT4)	IP(V_PRINT4)
1.592 E–01	3.547 E+00	6.157 E+01
FREQ	IM(V_PRINT5)	IP(V_PRINT5)
1.592 E–01	1.357 E+00	9.781 E+01
FREQ	IM(V_PRINT6)	IP(V_PRINT6)
1.592 E–01	3.831 E+00	–1.649 E+02

from this we obtain

I_{aA} = **$\underline{4.71\angle 71.38° \text{ A}}$**, I_{bB} = **$\underline{6.781\angle -142.6° \text{ A}}$**, I_{cC} = **$\underline{3.898\angle -5.08° \text{ A}}$**

I_{AB} = **$\underline{3.547\angle 61.57° \text{ A}}$**, I_{AC} = **$\underline{1.357\angle 97.81° \text{ A}}$**, I_{BC} = **$\underline{3.831\angle -164.9° \text{ A}}$**

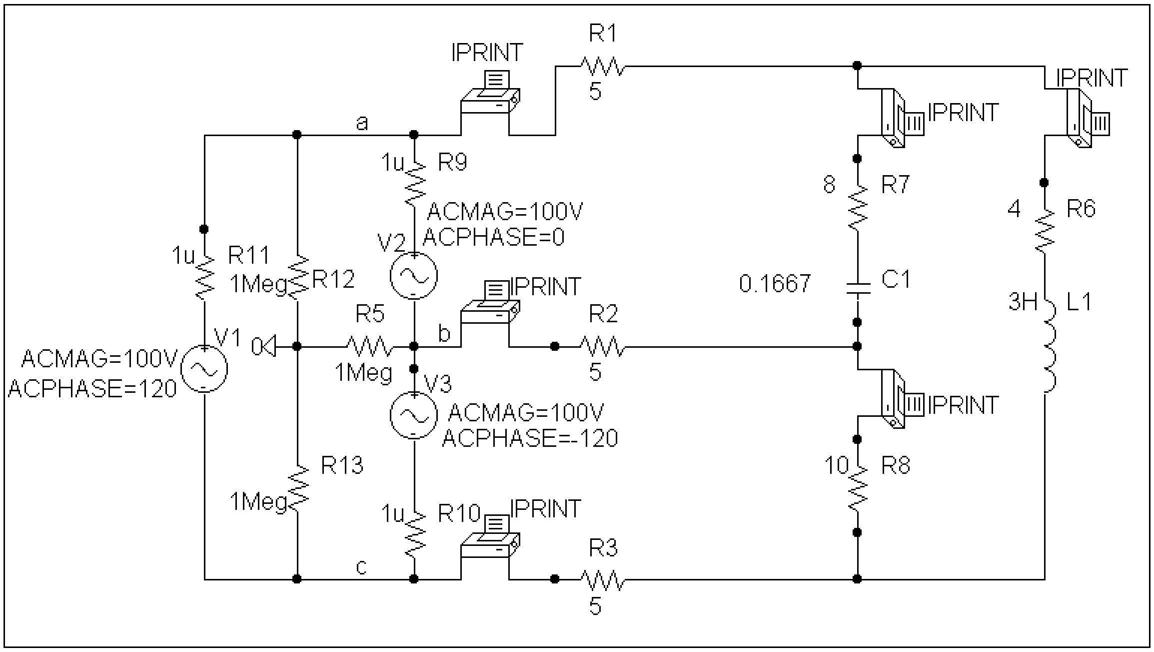

Chapter 12, Solution 65.

Due to the delta-connected source, we follow Example 12.12. We type Total Pts = 1, Start Freq = 0.1592, and End Freq = 0.1592. The schematic is shown below. After it is saved and simulated, we obtain an output file which includes

FREQ	IM(V_PRINT1)	IP(V_PRINT1)
1.592 E–01	6.581 E+00	9.866 E+01
FREQ	IM(V_PRINT2)	IP(V_PRINT2)
1.592 E–01	1.140 E+01	–1.113 E+02
FREQ	IM(V_PRINT3)	IP(V_PRINT3)
1.592 E–01	6.581 E+00	3.866 E+01

Thus, I_{aA} = **$\underline{6.581\angle 98.66^\circ \text{ A}}$**, I_{bB} = **$\underline{11.4\angle -111.3 \text{ A}}$**, I_{cC} = **$\underline{6.581\angle 38.66^\circ \text{ A}}$**

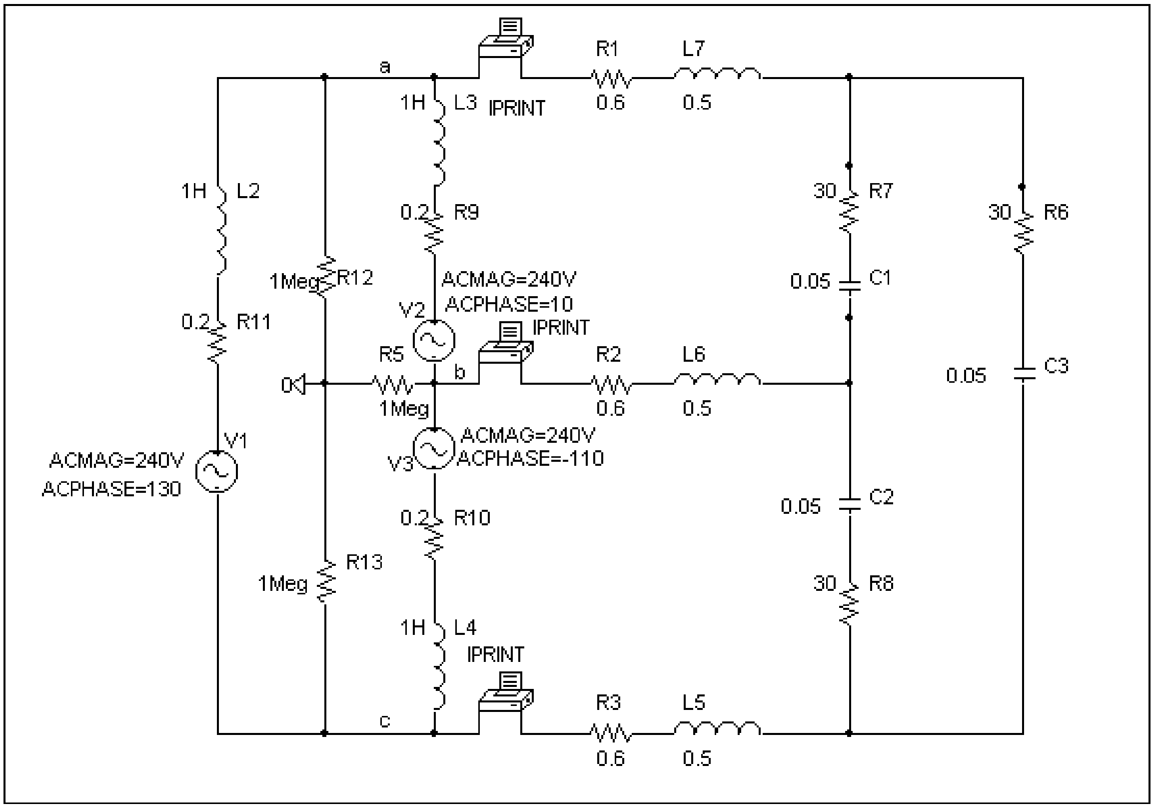

Chapter 12, Solution 66.

(a) $V_p = \dfrac{V_L}{\sqrt{3}} = \dfrac{208}{\sqrt{3}} = \underline{\textbf{120 V}}$

(b) Because the load is unbalanced, we have an unbalanced three-phase system. Assuming an abc sequence,

$$\mathbf{I}_1 = \frac{120\angle 0°}{48} = 2.5\angle 0° \text{ A}$$

$$\mathbf{I}_2 = \frac{120\angle -120°}{40} = 3\angle -120° \text{ A}$$

$$\mathbf{I}_3 = \frac{120\angle 120°}{60} = 2\angle 120° \text{ A}$$

$$-\mathbf{I}_N = \mathbf{I}_1 + \mathbf{I}_2 + \mathbf{I}_3 = 2.5 + (3)\left(-0.5 - j\frac{\sqrt{3}}{2}\right) + (2)\left(-0.5 + j\frac{\sqrt{3}}{2}\right)$$

$$\mathbf{I}_N = j\frac{\sqrt{3}}{2} = j0.866 = 0.866\angle 90° \text{ A}$$

Hence,

$$I_1 = \underline{\mathbf{2.5\ A}}, \quad I_2 = \underline{\mathbf{3\ A}}, \quad I_3 = \underline{\mathbf{2\ A}}, \quad I_N = \underline{\mathbf{0.866\ A}}$$

(c) $P_1 = I_1^2 R_1 = (2.5)^2(48) = \underline{\mathbf{300\ W}}$

$P_2 = I_2^2 R_2 = (3)^2(40) = \underline{\mathbf{360\ W}}$

$P_3 = I_3^2 R_3 = (2)^2(60) = \underline{\mathbf{240\ W}}$

(d) $P_T = P_1 + P_2 + P_3 = \underline{\mathbf{900\ W}}$

Chapter 12, Solution 67.

(a) The power to the motor is

$$P_T = S\cos\theta = (260)(0.85) = 221 \text{ kW}$$

The motor power per phase is

$$P_p = \frac{1}{3}P_T = 73.67 \text{ kW}$$

Hence, the wattmeter readings are as follows:

$$W_a = 73.67 + 24 = \underline{\mathbf{97.67\ kW}}$$

$$W_b = 73.67 + 15 = \underline{\mathbf{88.67\ kW}}$$

$$W_c = 73.67 + 9 = \underline{\mathbf{83.67\ kW}}$$

(b) The motor load is balanced so that $I_N = 0$.
For the lighting loads,

$$I_a = \frac{24{,}000}{120} = 200 \text{ A}$$

$$I_b = \frac{15{,}000}{120} = 125 \text{ A}$$

$$I_c = \frac{9{,}000}{120} = 75 \text{ A}$$

If we let

$$\mathbf{I}_a = I_a\angle 0° = 200\angle 0°\ \text{A}$$
$$\mathbf{I}_b = 125\angle -120°\ \text{A}$$
$$\mathbf{I}_c = 75\angle 120°\ \text{A}$$

Then,

$$-\mathbf{I}_N = \mathbf{I}_a + \mathbf{I}_b + \mathbf{I}_c$$

$$-\mathbf{I}_N = 200 + (125)\left(-0.5 - j\frac{\sqrt{3}}{2}\right) + (75)\left(-0.5 + j\frac{\sqrt{3}}{2}\right)$$

$$-\mathbf{I}_N = 100 - 86.602\ \text{A}$$
$$\left|\mathbf{I}_N\right| = \underline{\mathbf{132.3\ A}}$$

Chapter 12, Solution 68.

(a) $S = \sqrt{3}\,V_L I_L = \sqrt{3}\,(330)(8.4) = \underline{\mathbf{4801\ VA}}$

(b) $P = S\cos\theta \longrightarrow \text{pf} = \cos\theta = \dfrac{P}{S}$

$$\text{pf} = \frac{4500}{4801.24} = \underline{\mathbf{0.9372}}$$

(c) For a wye-connected load,

$$I_p = I_L = \underline{\mathbf{8.4\ A}}$$

(d) $V_p = \dfrac{V_L}{\sqrt{3}} = \dfrac{330}{\sqrt{3}} = \underline{\mathbf{190.53\ V}}$

Chapter 12, Solution 69.

$\overline{S}_1 = 1.2(0.8 + j0.6) = 0.96 + j0.72\ \text{MVA}$, $\overline{S}_2 = 2(0.75 - j0.661) = 1.5 - 1.323\ \text{MVA}$, $\overline{S}_3 = 0.8\ \text{MVA}$

$\overline{S} = \overline{S}_1 + \overline{S}_2 + \overline{S}_3 = 3.26 - j0.603\ \text{MVA}$, $pf = \dfrac{P}{S} = \dfrac{3.26}{3.3153} = 0.9833$

$$Q_c = P(\tan_{old} - \tan_{new}) = 3.26[\tan(\cos^{-1} 0.9833) - \tan(\cos^{-1} 0.99) = 0.1379\ \text{MVA}$$

$$C = \frac{\frac{1}{3}x0.1379x10^6}{2\pi x60x6.6^2x10^6} = \underline{28\ \text{mF}}$$

Chapter 12, Solution 70.

$$P_T = P_1 + P_2 = 1200 - 400 = 800$$

$$Q_T = P_2 - P_1 = \text{-}400 - 1200 = \text{-}1600$$

$$\tan\theta = \frac{Q_T}{P_T} = \frac{\text{-}1600}{800} = \text{-}2 \longrightarrow \theta = \text{-}63.43°$$

$$\text{pf} = \cos\theta = \underline{\mathbf{0.4472 \quad (leading)}}$$

$$Z_p = \frac{V_L}{I_L} = \frac{240}{6} = 40$$

$$\mathbf{Z}_p = \underline{\mathbf{40\angle\text{-}63.43°\,\Omega}}$$

Chapter 12, Solution 71.

(a) If $\mathbf{V}_{ab} = 208\angle 0°$, $\mathbf{V}_{bc} = 208\angle\text{-}120°$, $\mathbf{V}_{ca} = 208\angle 120°$,

$$\mathbf{I}_{AB} = \frac{\mathbf{V}_{ab}}{\mathbf{Z}_{Ab}} = \frac{208\angle 0°}{20} = 10.4\angle 0°$$

$$\mathbf{I}_{BC} = \frac{\mathbf{V}_{bc}}{\mathbf{Z}_{BC}} = \frac{208\angle\text{-}120°}{10\sqrt{2}\,\angle\text{-}45°} = 14.708\angle\text{-}75°$$

$$\mathbf{I}_{CA} = \frac{\mathbf{V}_{ca}}{\mathbf{Z}_{CA}} = \frac{208\angle 120°}{13\angle 22.62°} = 16\angle 97.38°$$

$$\mathbf{I}_{aA} = \mathbf{I}_{AB} - \mathbf{I}_{CA} = 10.4\angle 0° - 16\angle 97.38°$$
$$\mathbf{I}_{aA} = 10.4 + 2.055 - j15.867$$
$$\mathbf{I}_{aA} = 20.171\angle\text{-}51.87°$$

$$\mathbf{I}_{cC} = \mathbf{I}_{CA} - \mathbf{I}_{BC} = 16\angle 97.83° - 14.708\angle\text{-}75°$$
$$\mathbf{I}_{cC} = 30.64\angle 101.03°$$

$$P_1 = \left|\mathbf{V}_{ab}\right|\left|\mathbf{I}_{aA}\right|\cos(\theta_{V_{ab}} - \theta_{I_{aA}})$$

$$P_1 = (208)(20.171)\cos(0° + 51.87°) = \underline{\textbf{2590 W}}$$

$$P_2 = \left|\mathbf{V}_{cb}\right|\left|\mathbf{I}_{cC}\right|\cos(\theta_{V_{cb}} - \theta_{I_{cC}})$$

But $\quad \mathbf{V}_{cb} = -\mathbf{V}_{bc} = 208\angle 60°$

$$P_2 = (208)(30.64)\cos(60° - 101.03°) = \underline{\textbf{4808 W}}$$

(b)
$$P_T = P_1 + P_2 = 7398.17 \text{ W}$$
$$Q_T = \sqrt{3}\,(P_2 - P_1) = 3840.25 \text{ VAR}$$
$$\mathbf{S}_T = P_T + jQ_T = 7398.17 + j3840.25 \text{ VA}$$
$$S_T = \left|\mathbf{S}_T\right| = \underline{\textbf{8335 VA}}$$

Chapter 12, Solution 72.

From Problem 12.11,

$\mathbf{V}_{AB} = 220\angle 130° \text{ V}$ and $\mathbf{I}_{aA} = 30\angle 180° \text{ A}$

$$P_1 = (220)(30)\cos(130° - 180°) = \underline{\textbf{4242 W}}$$

$$\mathbf{V}_{CB} = -\mathbf{V}_{BC} = 220\angle 190°$$
$$\mathbf{I}_{cC} = 30\angle -60°$$

$$P_2 = (220)(30)\cos(190° + 60°) = \underline{\textbf{-2257 W}}$$

Chapter 12, Solution 73.

Consider the circuit as shown below.

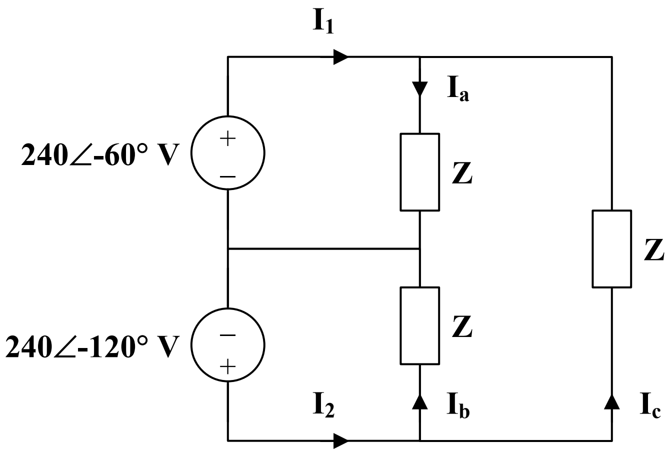

$$\mathbf{Z} = 10 + j30 = 31.62\angle 71.57°$$

$$\mathbf{I}_a = \frac{240\angle -60°}{31.62\angle 71.57°} = 7.59\angle -131.57°$$

$$\mathbf{I}_b = \frac{240\angle -120°}{31.62\angle 71.57°} = 7.59\angle -191.57°$$

$$\mathbf{I}_c\,\mathbf{Z} + 240\angle -60° - 240\angle -120° = 0$$

$$\mathbf{I}_c = \frac{-240}{31.62\angle 71.57°} = 7.59\angle 108.43°$$

$$\mathbf{I}_1 = \mathbf{I}_a - \mathbf{I}_c = 13.146\angle -101.57°$$
$$\mathbf{I}_2 = \mathbf{I}_b + \mathbf{I}_c = 13.146\angle 138.43°$$

$$P_1 = \text{Re}\left[\mathbf{V}_1\mathbf{I}_1^*\right] = \text{Re}\left[(240\angle -60°)(13.146\angle 101.57°)\right] = \underline{\mathbf{2360\ W}}$$

$$P_2 = \text{Re}\left[\mathbf{V}_2\mathbf{I}_2^*\right] = \text{Re}\left[(240\angle -120°)(13.146\angle -138.43°)\right] = \underline{\mathbf{-632.8\ W}}$$

Chapter 12, Solution 74.

Consider the circuit shown below.

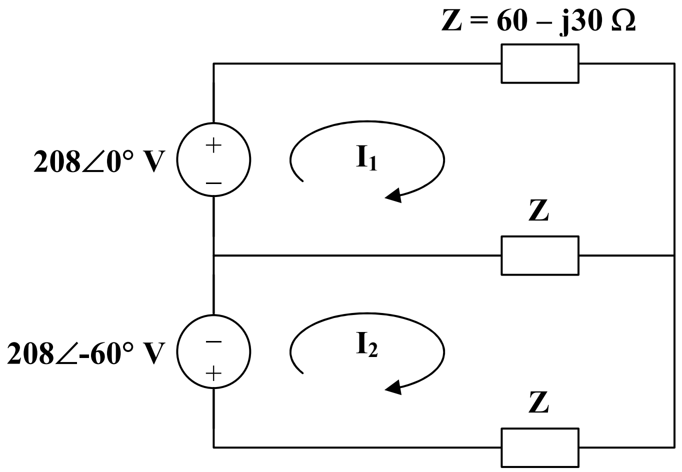

For mesh 1,

$$208 = 2\mathbf{Z}\mathbf{I}_1 - \mathbf{Z}\mathbf{I}_2$$

For mesh 2,

$$-208\angle -60° = -\mathbf{Z}\mathbf{I}_1 + 2\mathbf{Z}\mathbf{I}_2$$

In matrix form,

$$\begin{bmatrix} 208 \\ -208\angle -60° \end{bmatrix} = \begin{bmatrix} 2\mathbf{Z} & -\mathbf{Z} \\ -\mathbf{Z} & 2\mathbf{Z} \end{bmatrix} \begin{bmatrix} \mathbf{I}_1 \\ \mathbf{I}_2 \end{bmatrix}$$

$$\Delta = 3\mathbf{Z}^2, \quad \Delta_1 = (208)(1.5 + j0.866)\,\mathbf{Z}, \quad \Delta_2 = (208)(j1.732)\,\mathbf{Z}$$

$$\mathbf{I}_1 = \frac{\Delta_1}{\Delta} = \frac{(208)(1.5 + j0.866)}{(3)(60 - j30)} = 1.789\angle 56.56°$$

$$\mathbf{I}_2 = \frac{\Delta_2}{\Delta} = \frac{(208)(j1.732)}{(3)(60 - j30)} = 1.79\angle 116.56°$$

$$P_1 = \text{Re}\left[\,\mathbf{V}_1\,\mathbf{I}_1^*\,\right] = \text{Re}\left[\,(208)(1.789\angle -56.56°)\,\right] = \underline{\mathbf{208.98\ W}}$$

$$P_2 = \text{Re}\left[\,\mathbf{V}_2\,(-\mathbf{I}_2)^*\,\right] = \text{Re}\left[\,(208\angle -60°))(1.79\angle 63.44°)\,\right] = \underline{\mathbf{371.65\ W}}$$

Chapter 12, Solution 75.

(a) $I = \frac{V}{R} = \frac{12}{600} = \underline{\mathbf{20\ mA}}$

(b) $I = \frac{V}{R} = \frac{120}{600} = \underline{\mathbf{200\ mA}}$

Chapter 12, Solution 76.

If both appliances have the same power rating, P,

$$I = \frac{P}{V_s}$$

For the 120-V appliance, $I_1 = \frac{P}{120}$.

For the 240-V appliance, $I_2 = \frac{P}{240}$.

$$\text{Power loss} = I^2 R = \begin{cases} \dfrac{P^2 R}{120^2} & \text{for the 120-V appliance} \\ \dfrac{P^2 R}{240^2} & \text{for the 240-V appliance} \end{cases}$$

Since $\frac{1}{120^2} > \frac{1}{240^2}$, **<u>the losses in the 120-V appliance are higher</u>**.

Chapter 12, Solution 77.

$$P_g = P_T - P_{load} - P_{line}\,, \qquad pf = 0.85$$

But $\quad P_T = 3600\cos\theta = 3600 \times pf = 3060$

$$P_g = 3060 - 2500 - (3)(80) = \underline{\mathbf{320\ W}}$$

Chapter 12, Solution 78.

$$\cos\theta_1 = \frac{51}{60} = 0.85 \longrightarrow \theta_1 = 31.79°$$

$$Q_1 = S_1 \sin\theta_1 = (60)(0.5268) = 31.61\ \text{kVAR}$$

$$P_2 = P_1 = 51\ \text{kW}$$
$$\cos\theta_2 = 0.95 \longrightarrow \theta_2 = 18.19°$$

$$S_2 = \frac{P_2}{\cos\theta_2} = 53.68\ \text{kVA}$$

$$Q_2 = S_2 \sin\theta_2 = 16.759\ \text{kVAR}$$

$$Q_c = Q_1 - Q_2 = 3.61 - 16.759 = 14.851\ \text{kVAR}$$

For each load,

$$Q_{c1} = \frac{Q_c}{3} = 4.95\ \text{kVAR}$$

$$C = \frac{Q_{c1}}{\omega V^2} = \frac{4950}{(2\pi)(60)(440)^2} = \underline{\mathbf{67.82\ \mu F}}$$

Chapter 12, Solution 79.

Consider the per-phase equivalent circuit below.

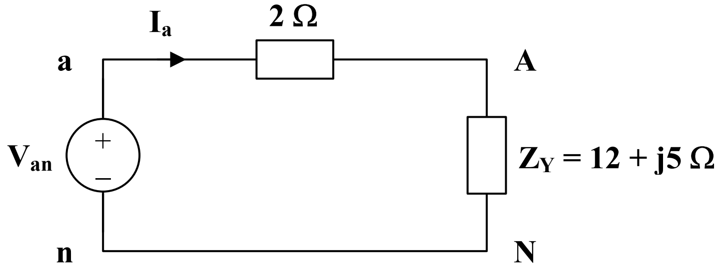

$$\mathbf{I}_a = \frac{\mathbf{V}_{an}}{\mathbf{Z}_Y + 2} = \frac{255\angle 0°}{14 + j5} = \underline{\mathbf{17.15\angle -19.65°\ A}}$$

Thus,

$$\mathbf{I}_b = \mathbf{I}_a \angle -120° = \underline{\mathbf{17.15\angle -139.65°\ A}}$$
$$\mathbf{I}_c = \mathbf{I}_a \angle 120° = \underline{\mathbf{17.15\angle 100.35°\ A}}$$

$$\mathbf{V}_{AN} = \mathbf{I}_a\,\mathbf{Z}_Y = (17.15\angle -19.65°)(13\angle 22.62°) = \underline{\mathbf{223\angle 2.97°\ V}}$$

Thus,

$$\mathbf{V}_{BN} = \mathbf{V}_{AN}\angle -120° = \underline{\mathbf{223\angle -117.63°\ V}}$$
$$\mathbf{V}_{CN} = \mathbf{V}_{AN}\angle 120° = \underline{\mathbf{223\angle 122.97°\ V}}$$

Chapter 12, Solution 80.

$$S = S_1 + S_2 + S_3 = 6[0.83 + j\sin(\cos^{-1} 0.83)] + S_2 + 8(0.7071 - j0.7071)$$
$$S = 10.6368 - j2.31 + S_2 \text{ kVA} \qquad (1)$$

But
$$S = \sqrt{3}V_L I_L \angle\theta = \sqrt{3}(208)(84.6)(0.8 + j0.6)\text{ VA} = 24.383 + \text{j}18.287\text{ kVA} \qquad (2)$$

From (1) and (2),
$$S_2 = 13.746 + j20.6 = 24.76\angle 56.28\text{ kVA}$$
Thus, the unknown load is <u>24.76 kVA at 0.5551 pf lagging</u>.

Chapter 12, Solution 81.

$$\text{pf} = 0.8 \quad \text{(leading)} \longrightarrow \theta_1 = \text{-}36.87°$$
$$\mathbf{S}_1 = 150\angle\text{-}36.87° \text{ kVA}$$

$$\text{pf} = 1.0 \longrightarrow \theta_2 = 0°$$
$$\mathbf{S}_2 = 100\angle 0° \text{ kVA}$$

$$\text{pf} = 0.6 \quad \text{(lagging)} \longrightarrow \theta_3 = 53.13°$$
$$\mathbf{S}_3 = 200\angle 53.13° \text{ kVA}$$

$$\mathbf{S}_4 = 80 + j95 \text{ kVA}$$

$$\mathbf{S} = \mathbf{S}_1 + \mathbf{S}_2 + \mathbf{S}_3 + \mathbf{S}_4$$
$$\mathbf{S} = 420 + j165 = 451.2\angle 21.45° \text{ kVA}$$

$$S = \sqrt{3}\, V_L I_L$$

Chapter 12, Solution 82.

$\overline{S}_1 = 400(0.8 + j0.6) = 320 + j240\,\text{kVA}, \qquad \overline{S}_2 = 3\dfrac{V^2_p}{Z^*_p}$

For the delta-connected load, $V_L = V_p$

$$\overline{S}_2 = 3x\frac{(2400)^2}{10 - j8} = 1053.7 + j842.93\,\text{kVA}$$

$\overline{S} = \overline{S}_1 + \overline{S}_2 = 1.3737 + j1.0829\,\text{MVA}$

Let $I = I_1 + I_2$ be the total line current. For I_1,

$$S_1 = 3V_p I^*_1, \qquad V_p = \frac{V_L}{\sqrt{3}}$$

$$I^*_1 = \frac{S_1}{\sqrt{3}V_L} = \frac{(320 + j240)x10^3}{\sqrt{3}(2400)}, \qquad I_1 = 76.98 - j57.735$$

For I_2, convert the load to wye.

$$I_2 = I_p\sqrt{3}\angle -30^o = \frac{2400}{10 + j8}\sqrt{3}\angle -30^o = 273.1 - j289.76$$

$$I = I_1 + I_2 = 350 - j347.5$$

$$V_s = V_L + V_{line} = 2400 + I(3 + j6) = 5.185 + j1.405\,\text{kV} \longrightarrow |V_s| = \underline{5.372\,\text{kV}}$$

Chapter 12, Solution 83.

$S_1 = 120x746x0.95(0.707 + j0.707) = 60.135 + j60.135\,\text{kVA}, \qquad S_2 = 80\,\text{kVA}$

$$S = S_1 + S_2 = 140.135 + j60.135\,\text{kVA}$$

But $|S| = \sqrt{3}V_L I_L \longrightarrow I_L = \dfrac{|S|}{\sqrt{3}V_L} = \dfrac{152.49x10^3}{\sqrt{3}x480} = \underline{183.42\,\text{A}}$

Chapter 12, Solution 84.

We first find the magnitude of the various currents.

For the motor,

$$I_L = \frac{S}{\sqrt{3}\,V_L} = \frac{4000}{440\sqrt{3}} = 5.248\ \text{A}$$

For the capacitor,

$$I_C = \frac{Q_c}{V_L} = \frac{1800}{440} = 4.091\ \text{A}$$

For the lighting,

$$V_p = \frac{440}{\sqrt{3}} = 254\ \text{V}$$

$$I_{Li} = \frac{P_{Li}}{V_p} = \frac{800}{254} = 3.15\ \text{A}$$

Consider the figure below.

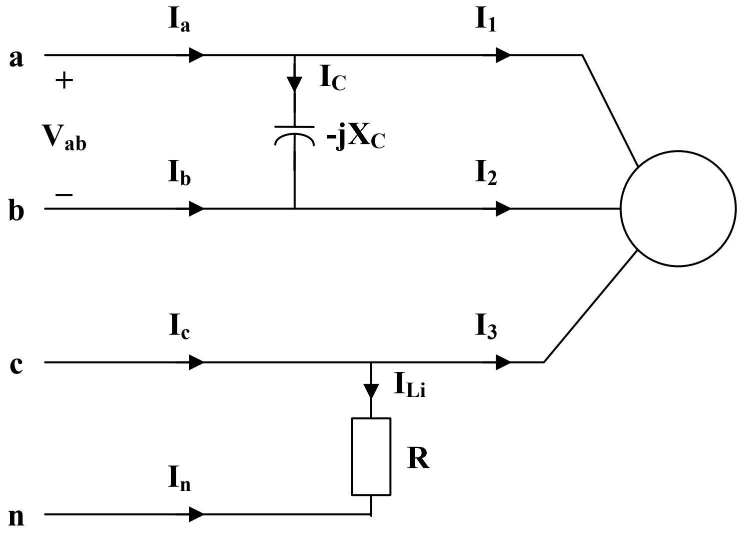

If $\mathbf{V}_{an} = V_p\angle 0°$, $\quad \mathbf{V}_{ab} = \sqrt{3}\,V_p\angle 30°$

$$\mathbf{V}_{cn} = V_p\angle 120°$$

$$\mathbf{I}_C = \frac{\mathbf{V}_{ab}}{-jX_C} = 4.091\angle 120°$$

$$\mathbf{I}_1 = \frac{\mathbf{V}_{ab}}{\mathbf{Z}_\Delta} = 4.091\angle(\theta + 30°)$$

where $\theta = \cos^{-1}(0.72) = 43.95°$

$$\mathbf{I}_1 = 5.249\angle 73.95°$$

$$\mathbf{I}_2 = 5.249\angle -46.05°$$

$$\mathbf{I}_3 = 5.249\angle 193.95°$$

$$\mathbf{I}_{Li} = \frac{\mathbf{V}_{cn}}{R} = 3.15\angle 120°$$

Thus,

$$\mathbf{I}_a = \mathbf{I}_1 + \mathbf{I}_C = 5.249\angle 73.95° + 4.091\angle 120°$$

$$\mathbf{I}_a = \underline{\mathbf{8.608\angle 93.96°\ A}}$$

$$\mathbf{I}_b = \mathbf{I}_2 - \mathbf{I}_C = 5.249\angle -46.05° - 4.091\angle 120°$$

$$\mathbf{I}_b = \underline{\mathbf{9.271\angle -52.16°\ A}}$$

$$\mathbf{I}_c = \mathbf{I}_3 + \mathbf{I}_{Li} = 5.249\angle 193.95° + 3.15\angle 120°$$

$$\mathbf{I}_c = \underline{\mathbf{6.827\angle 167.6°\ A}}$$

$$\mathbf{I}_n = -\mathbf{I}_{Li} = \underline{\mathbf{3.15\angle -60°\ A}}$$

Chapter 12, Solution 85.

Let $Z_Y = R$

$$V_p = \frac{V_L}{\sqrt{3}} = \frac{240}{\sqrt{3}} = 138.56\ V$$

$$P = V_p I_p = \frac{27}{2} = 9\ kW = \frac{V_p^2}{R}$$

$$R = \frac{V_p^2}{P} = \frac{(138.56)^2}{9000} = 2.133\,\Omega$$

Thus, $Z_Y = \underline{\mathbf{2.133\,\Omega}}$

Chapter 12, Solution 86.

Consider the circuit shown below.

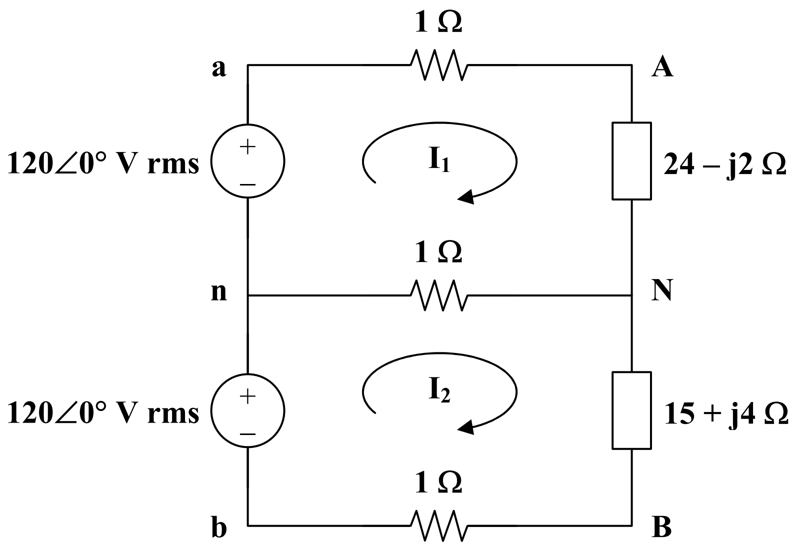

For the two meshes,

$$120 = (26 - j2)\mathbf{I}_1 - \mathbf{I}_2 \qquad (1)$$

$$120 = (17 + j4)\mathbf{I}_2 - \mathbf{I}_1 \qquad (2)$$

In matrix form,

$$\begin{bmatrix} 120 \\ 120 \end{bmatrix} = \begin{bmatrix} 26 - j2 & -1 \\ -1 & 17 + j4 \end{bmatrix} \begin{bmatrix} \mathbf{I}_1 \\ \mathbf{I}_2 \end{bmatrix}$$

$$\Delta = 449 + j70, \quad \Delta_1 = (120)(18 + j4), \quad \Delta_2 = (120)(27 - j2)$$

$$\mathbf{I}_1 = \frac{\Delta_1}{\Delta} = \frac{120 \times 18.44\angle 12.53°}{454.42\angle 8.86°} = 4.87\angle 3.67°$$

$$\mathbf{I}_2 = \frac{\Delta_2}{\Delta} = \frac{120 \times 27.07\angle\text{-}4.24°}{454.42\angle 8.86°} = 7.15\angle\text{-}13.1°$$

$\mathbf{I}_{aA} = \mathbf{I}_1 = \underline{\mathbf{4.87\angle 3.67° \ A}}$

$\mathbf{I}_{bB} = -\mathbf{I}_2 = \underline{\mathbf{7.15\angle 166.9° \ A}}$

$$\mathbf{I}_{nN} = \mathbf{I}_2 - \mathbf{I}_1 = \frac{\Delta_2 - \Delta_1}{\Delta}$$

$$\mathbf{I}_{nN} = \frac{(120)(9 - j6)}{449 + j70} = \underline{\mathbf{2.856\angle -42.55° \ A}}$$

Chapter 12, Solution 87.

$$L = 50 \text{ mH} \longrightarrow j\omega L = j(2\pi)(60)(5010^{-3}) = j18.85$$

Consider the circuit below.

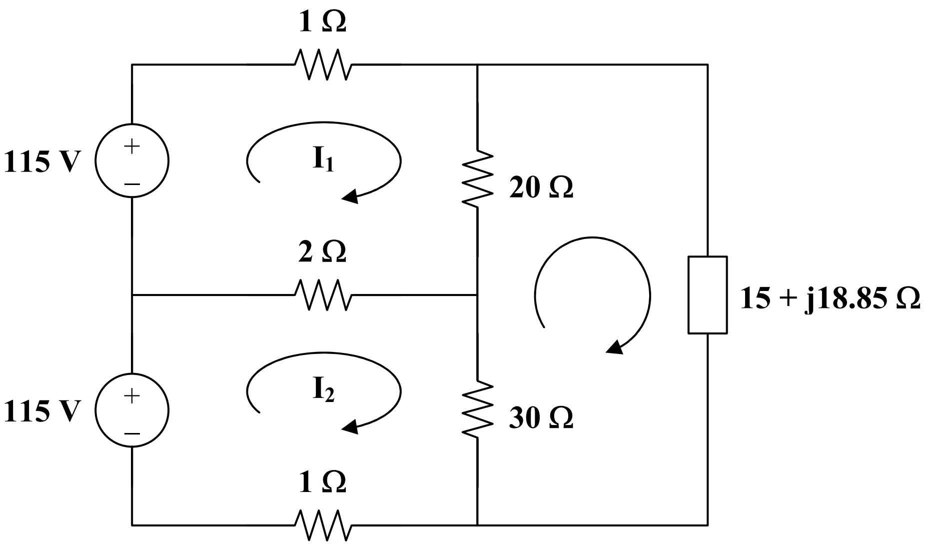

Applying KVl to the three meshes, we obtain

$$23\mathbf{I}_1 - 2\mathbf{I}_2 - 20\mathbf{I}_3 = 115 \quad (1)$$

$$-2\mathbf{I}_1 + 33\mathbf{I}_2 - 30\mathbf{I}_3 = 115 \quad (2)$$

$$-20\mathbf{I}_1 - 30\mathbf{I}_2 + (65 + j18.85)\mathbf{I}_3 = 0 \quad (3)$$

In matrix form,

$$\begin{bmatrix} 23 & -2 & -20 \\ -2 & 33 & -30 \\ -20 & -30 & 65 + j18.85 \end{bmatrix} \begin{bmatrix} \mathbf{I}_1 \\ \mathbf{I}_2 \\ \mathbf{I}_3 \end{bmatrix} = \begin{bmatrix} 115 \\ 115 \\ 0 \end{bmatrix}$$

$\Delta = 12{,}775 + j14{,}232$, $\quad \Delta_1 = (115)(1975 + j659.8)$

$\Delta_2 = (115)(1825 + j471.3)$, $\quad \Delta_3 = (115)(1450)$

$$\mathbf{I}_1 = \frac{\Delta_1}{\Delta} = \frac{115 \times 2082\angle 18.47°}{19214\angle 48.09°} = 12.52\angle -29.62°$$

$$\mathbf{I}_2 = \frac{\Delta_2}{\Delta} = \frac{115 \times 1884.9\angle 14.48°}{19124\angle 48.09°} = 11.33\angle -33.61°$$

$$\mathbf{I}_n = \mathbf{I}_2 - \mathbf{I}_1 = \frac{\Delta_2 - \Delta_1}{\Delta} = \frac{(115)(-150 - j188.5)}{12{,}775 + j14{,}231.75} = \underline{\mathbf{1.448\angle -176.6°\ A}}$$

$$\mathbf{S_1 = V_1\, I_1^* = (115)(12.52\angle 29.62°) = \underline{1252 + j711.6\ VA}}$$

$$\mathbf{S}_2 = \mathbf{V}_2\, \mathbf{I}_2^* = (115)(1.33\angle 33.61°) = \underline{\mathbf{1085 + j721.2\ VA}}$$

Chapter 13, Solution 1.

For coil 1, $L_1 - M_{12} + M_{13} = 6 - 4 + 2 = 4$

For coil 2, $L_2 - M_{21} - M_{23} = 8 - 4 - 5 = -1$

For coil 3, $L_3 + M_{31} - M_{32} = 10 + 2 - 5 = 7$

$$L_T = 4 - 1 + 7 = 10H$$

or $$L_T = L_1 + L_2 + L_3 - 2M_{12} - 2M_{23} + 2M_{12}$$

$L_T = 6 + 8 + 10 =$ **<u>10H</u>**

Chapter 13, Solution 2.

$L = L_1 + L_2 + L_3 + 2M_{12} - 2M_{23}\ 2M_{31}$

$= 10 + 12 + 8 + 2x6 - 2x6 - 2x4$

$=$ **<u>22H</u>**

Chapter 13, Solution 3.

$L_1 + L_2 + 2M = 250$ mH (1)

$L_1 + L_2 - 2M = 150$ mH (2)

Adding (1) and (2),

$$2L_1 + 2L_2 = 400 \text{ mH}$$

But, $L_1 = 3L_{2,}$, or $8L_2 + 400$, and $L_2 =$ **<u>50 mH</u>**

$$L_1 = 3L_2 = \textbf{150 mH}$$

From (2), $150 + 50 - 2M = 150$ leads to $M =$ **<u>25 mH</u>**

$$k = M/\sqrt{L_1 L_2} = 2.5/\sqrt{50x150} = \textbf{0.2887}$$

Chapter 13, Solution 4.

(a) For the series connection shown in Figure (a), the current I enters each coil from its dotted terminal. Therefore, the mutually induced voltages have the same sign as the self-induced voltages. Thus,

$$L_{eq} = L_1 + L_2 + 2M$$

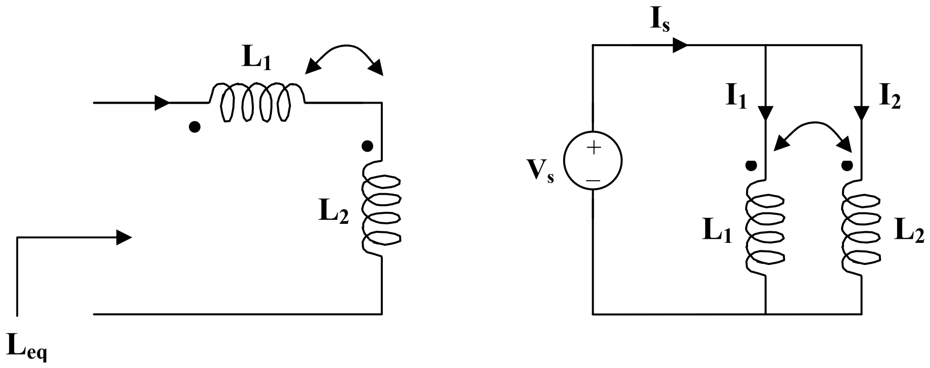

(a) (b)

(b) For the parallel coil, consider Figure (b).

$$I_s = I_1 + I_2 \quad \text{and} \quad Z_{eq} = V_s/I_s$$

Applying KVL to each branch gives,

$$V_s = j\omega L_1 I_1 + j\omega M I_2 \qquad (1)$$

$$V_s = j\omega M I_1 + j\omega\, L_2 I_2 \qquad (2)$$

or

$$\begin{bmatrix} V_s \\ V_s \end{bmatrix} = \begin{bmatrix} j\omega L_1 & j\omega M \\ j\omega M & j\omega L_2 \end{bmatrix} \begin{bmatrix} I_1 \\ I_2 \end{bmatrix}$$

$$\Delta = -\omega^2 L_1 L_2 + \omega^2 M^2, \quad \Delta_1 = j\omega V_s(L_2 - M), \quad \Delta_2 = j\omega V_s(L_1 - M)$$

$$I_1 = \Delta_1/\Delta, \text{ and } I_2 = \Delta_2/\Delta$$

$$I_s = I_1 + I_2 = (\Delta_1 + \Delta_2)/\Delta = j\omega(L_1 + L_2 - 2M)V_s/(\,-\omega^2(L_1L_2 - M))$$

$$Z_{eq} = V_s/I_s = j\omega(L_1L_2 - M)/[j\omega(L_1 + L_2 - 2M)] = j\omega L_{eq}$$

i.e., $L_{eq} = \underline{\mathbf{(L_1L_2 - M)/(L_1 + L_2 - 2M)}}$

Chapter 13, Solution 5.

(a) If the coils are connected in series,

$$L = L_1 + L_2 + 2M = 25 + 60 + 2(0.5)\sqrt{25x60} = \underline{\mathbf{123.7\ mH}}$$

(b) If they are connected in parallel,

$$L = \frac{L_1L_2 - M^2}{L_1 + L_2 - 2M} = \frac{25x60 - 19.36^2}{25 + 60 - 2x19.36}\,mH = \underline{\mathbf{24.31\ mH}}$$

Chapter 13, Solution 6.

$V_1 = \underline{\mathbf{(R_1 + j\omega L_1)I_1 - j\omega MI_2}}$

$V_2 = \underline{\mathbf{-j\omega MI_1 + (R_2 + j\omega L_2)I_2}}$

Chapter 13, Solution 7.

Applying KVL to the loop,

$$20\angle 30^\circ = I(-j6 + j8 + j12 + 10 - j4x2) = I(10 + j6)$$

where I is the loop current.

$$I = 20\angle 30^\circ/(10 + j6)$$

$$V_o = I(j12 + 10 - j4) = I(10 + j8)$$

$$= 20\angle 30^\circ(10 + j8)/(10 + j6) = \underline{\mathbf{22\angle 37.66^\circ\ V}}$$

Chapter 13, Solution 8.

Consider the current as shown below.

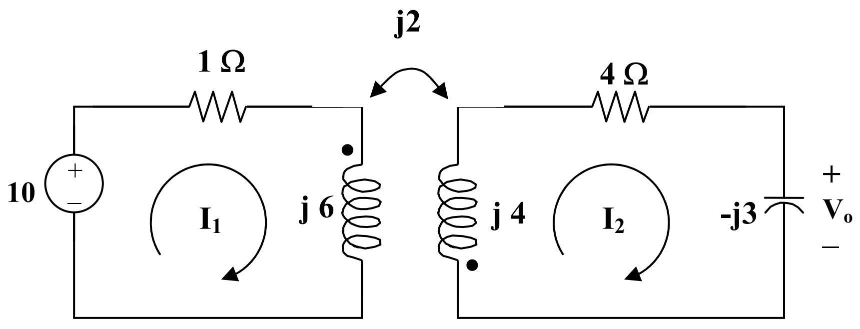

For mesh 1,

$$10 = (1 + j6)I_1 + j2I_2 \qquad (1)$$

For mesh 2, $0 = (4 + j4 - j3)I_2 + j2I_1$

$$0 = j2I_1 + (4 + j)I_2 \qquad (2)$$

In matrix form,

$$\begin{bmatrix} 10 \\ 0 \end{bmatrix} = \begin{bmatrix} 1 + j6 & j2 \\ j2 & 4 + j \end{bmatrix} \begin{bmatrix} I_1 \\ I_2 \end{bmatrix}$$

$$\Delta = 2 + j25, \text{ and } \Delta_2 = -j20$$

$$I_2 = \Delta_2/\Delta = -j20/(2 + j25)$$

$$V_o = -j3I_2 = -60/(2 + j25) = \underline{\mathbf{2.392\angle 94.57^\circ}}$$

Chapter 13, Solution 9.

Consider the circuit below.

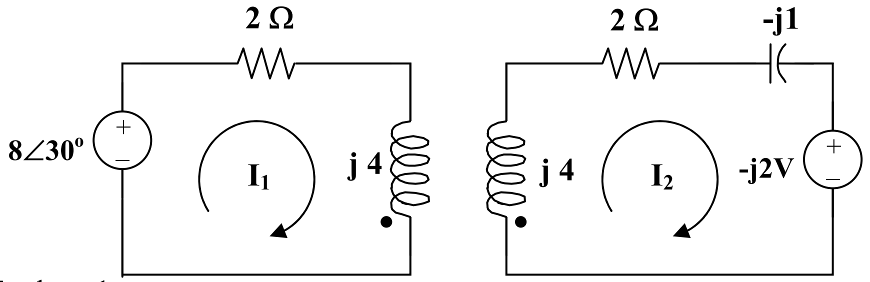

For loop 1,

$$8\angle 30^\circ = (2 + j4)I_1 - jI_2 \qquad (1)$$

For loop 2, $((j4 + 2 - j)I_2 - jI_1 + (-j2) = 0$

or $I_1 = (3 - j2)i_2 - 2 \qquad (2)$

Substituting (2) into (1), $8\angle 30^\circ + (2 + j4)2 = (14 + j7)I_2$

$$I_2 = (10.928 + j12)/(14 + j7) = 1.037\angle 21.12^\circ$$

$$V_x = 2I_2 = \underline{\mathbf{2.074\angle 21.12^\circ}}$$

Chapter 13, Solution 10.

Consider the circuit below.

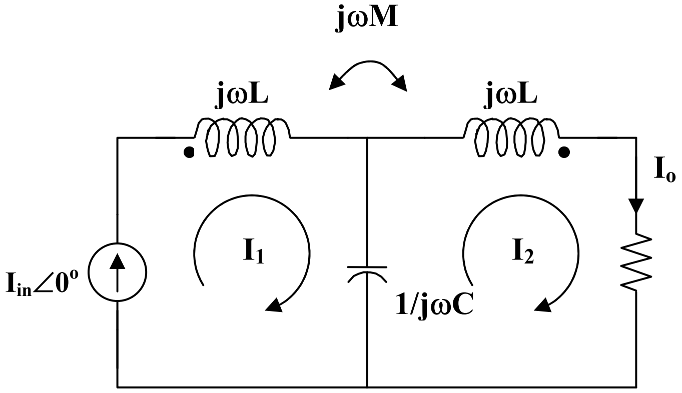

$M = k\sqrt{L_1L_2} = \sqrt{L^2} = L, \; I_1 = I_{in}\angle 0°, \; I_2 = I_o$

$I_o(j\omega L + R + 1/(j\omega C)) - j\omega L I_{in} - (1/(j\omega C))I_{in} = 0$

$I_o = \underline{\mathbf{j\, I_{in}(\omega L - 1/(\omega C))\,/(R + j\omega L + 1/(j\omega C))}}$

Chapter 13, Solution 11.

Consider the circuit below.

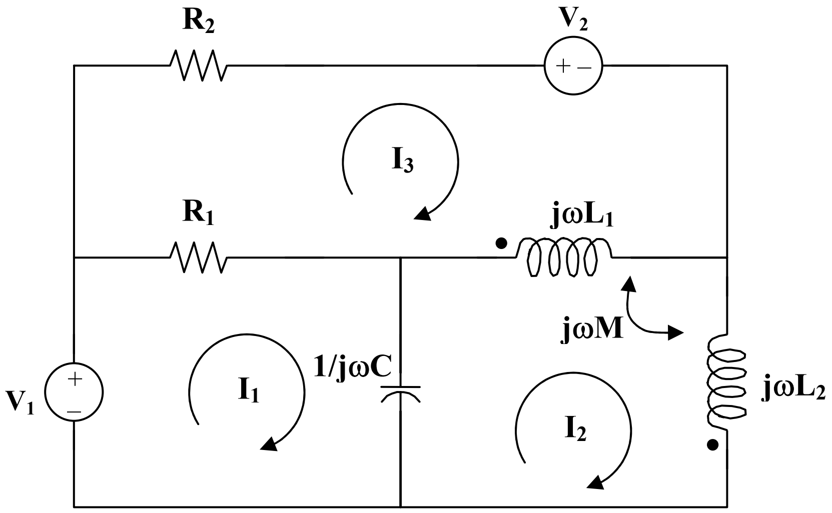

For mesh 1, $V_1 = \underline{\mathbf{I_1(R_1 + 1/(j\omega C)) - I_2(1/j\omega C)) - R_1I_3}}$

For mesh 2,

$0 = \underline{\mathbf{-I_1(1/(j\omega C)) + (j\omega L_1 + j\omega L_2 + (1/(j\omega C)) - j2\omega M)I_2 - j\omega L_1I_3 + j\omega MI_3}}$

For mesh 3, $-V_2 = -R_1I_1 - j\omega(L_1 - M)I_2 + (R_1 + R_2 + j\omega L_1)I_3$

or $V_2 = \underline{\mathbf{R_1I_1 + j\omega(L_1 - M)I_2 - (R_1 + R_2 + j\omega L_1)I_3}}$

Chapter 13, Solution 12.

Let $\omega = 1$.

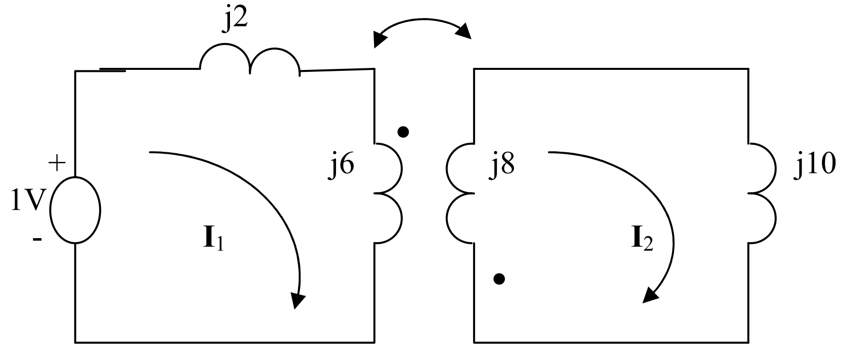

Applying KVL to the loops,

$1 = j8I_1 + j4I_2$ (1)

$0 = j4I_1 + j18I_2$ (2)

Solving (1) and (2) gives $\mathbf{I}_1$ = -j0.1406. Thus

$$Z = \frac{1}{I_1} = jL_{eq} \longrightarrow L_{eq} = \frac{1}{jI_1} = \underline{7.111 \text{ H}}$$

We can also use the equivalent T-section for the transform to find the equivalent inductance.

Chapter 13, Solution 13.

We replace the coupled inductance with an equivalent T-section and use series and parallel combinations to calculate **Z.** Assuming that $\omega = 1$,

$L_a = L_1 - M = 18 - 10 = 8, \qquad L_b = L_2 - M = 20 - 10 = 10, \qquad L_c = M = 10$

The equivalent circuit is shown below:

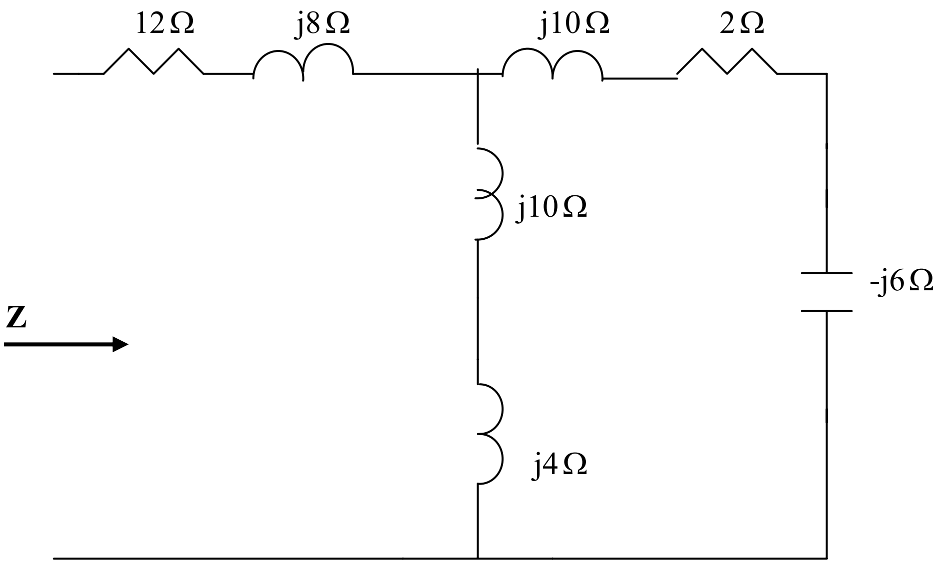

Z=12 +j8 + j14//(2 + j4) = **<u>13.195 + j11.244Ω</u>**

Chapter 13, Solution 14.

To obtain V_{Th}, convert the current source to a voltage source as shown below.

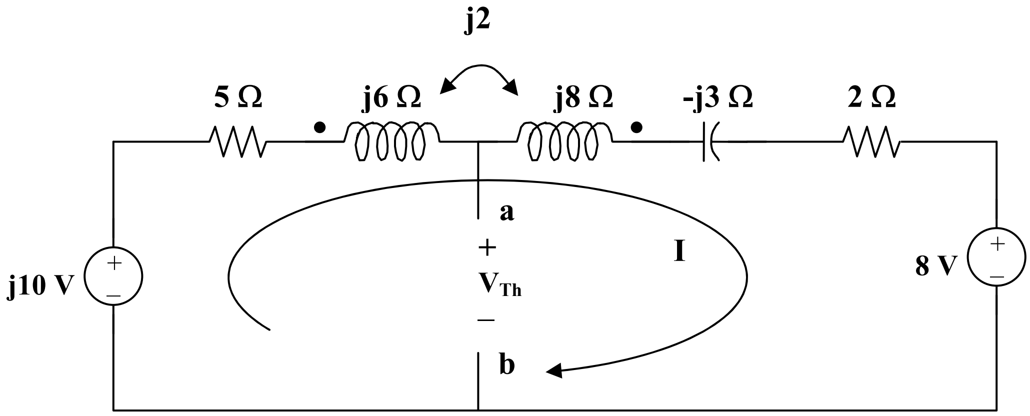

Note that the two coils are connected series aiding.

$$\omega L = \omega L_1 + \omega L_2 - 2\omega M$$

$$j\omega L = j6 + j8 - j4 = j10$$

Thus, $$-j10 + (5 + j10 - j3 + 2)I + 8 = 0$$

$$I = (-8 + j10)/(7 + j7)$$

But, $$-j10 + (5 + j6)I - j2I + V_{Th} = 0$$

$$V_{Th} = j10 - (5 + j4)I = j10 - (5 + j4)(-8 + j10)/(7 + j7)$$

$$V_{Th} = \underline{\mathbf{5.349\angle 34.11°}}$$

To obtain Z_{Th}, we set all the sources to zero and insert a 1-A current source at the terminals a–b as shown below.

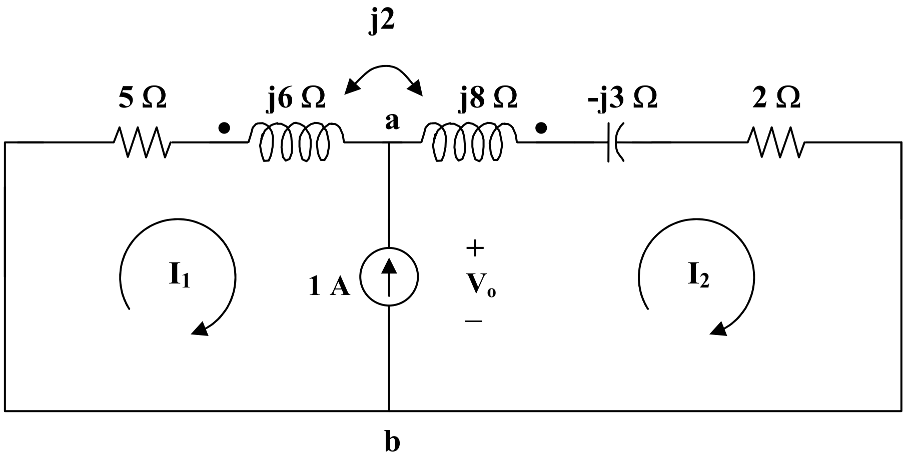

Clearly, we now have only a super mesh to analyze.

$$(5 + j6)I_1 - j2I_2 + (2 + j8 - j3)I_2 - j2I_1 = 0$$

$$(5 + j4)I_1 + (2 + j3)I_2 = 0 \qquad (1)$$

But, $\quad I_2 - I_1 = 1 \text{ or } I_2 = I_1 - 1 \qquad (2)$

Substituting (2) into (1), $\quad (5 + j4)I_1 + (2 + j3)(1 + I_1) = 0$

$$I_1 = -(2 + j3)/(7 + j7)$$

Now, $\quad ((5 + j6)I_1 - j2I_1 + V_o = 0$

$$V_o = -(5 + j4)I_1 = (5 + j4)(2 + j3)/(7 + j7) = (-2 + j23)/(7 + j7) = 2.332\angle 50°$$

$$Z_{Th} = V_o/1 = \underline{\mathbf{2.332\angle 50°\ ohms}}$$

Chapter 13, Solution 15.

To obtain I_N, short-circuit a–b as shown in Figure (a).

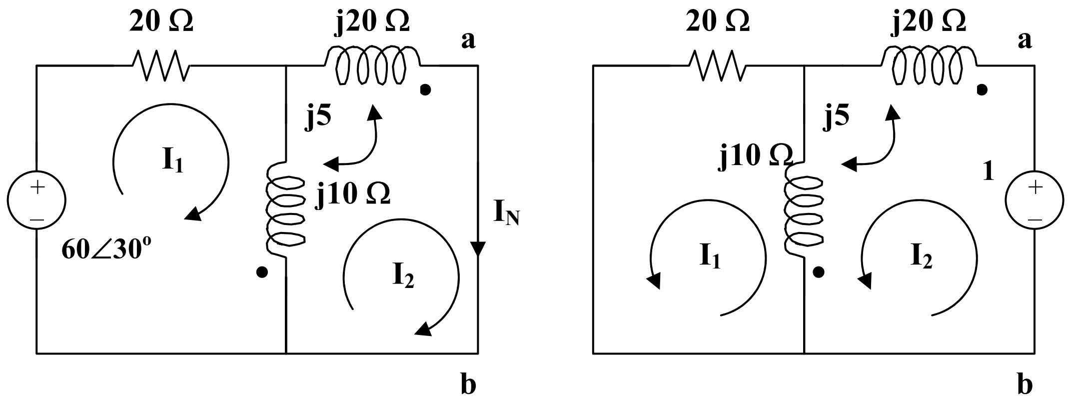

(a) (b)

For mesh 1,

$$60\angle 30^\circ = (20 + j10)I_1 + j5I_2 - j10I_2$$

or $$12\angle 30^\circ = (4 + j2)I_1 - jI_2 \qquad (1)$$

For mesh 2,

$$0 = (j20 + j10)I_2 - j5I_1 - j10I_1$$

or $$I_1 = 2I_2 \qquad (2)$$

Substituting (2) into (1), $$12\angle 30^\circ = (8 + j3)I_2$$

$$I_N = I_2 = 12\angle 30^\circ/(8 + j3) = \underline{\mathbf{1.404\angle 9.44^\circ\ A}}$$

To find Z_N, we set all the sources to zero and insert a 1-volt voltage source at terminals a–b as shown in Figure (b).

For mesh 1, $$1 = I_1(j10 + j20 - j5x2) + j5I_2$$

$$1 = j20I_1 + j5I_2 \qquad (3)$$

For mesh 2, $$0 = (20 + j10)I_2 + j5I_1 - j10I_1 = (4 + j2)I_2 - jI_1$$

or $$I_2 = jI_1/(4 + j2) \qquad (4)$$

Substituting (4) into (3), $$1 = j20I_1 + j(j5)I_1/(4 + j2) = (-1 + j20.5)I_1$$

$$I_1 = 1/(-1 + j20.5)$$

$$Z_N = 1/I_1 = \underline{\mathbf{(-1 + j20.5)\ ohms}}$$

Chapter 13, Solution 16.

To find $\mathbf{I}_N$, we short-circuit a-b.

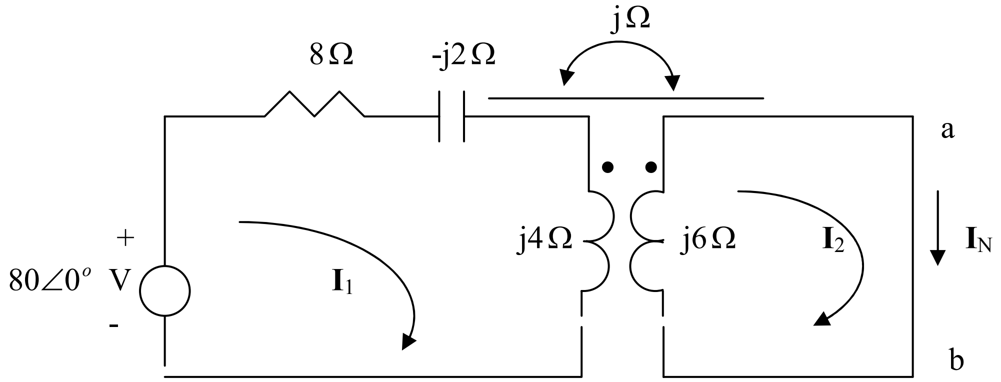

$$-80+(8-j2+j4)I_1-jI_2=0 \longrightarrow (8+j2)I_1-jI_2=80 \qquad (1)$$

$$j6I_2-jI_1=0 \longrightarrow I_1=6I_2 \qquad (2)$$

Solving (1) and (2) leads to

$$I_N=I_2=\frac{80}{48+j11}=1.584-j0.362=\underline{1.6246\angle-12.91^o\ \text{A}}$$

To find Z_N, insert a 1-A current source at terminals a-b. Transforming the current source to voltage source gives the circuit below.

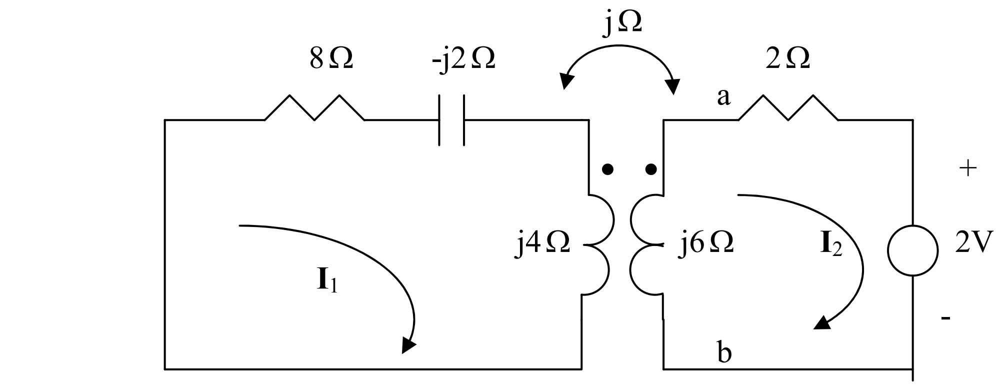

$$0=(8+j2)I_1-jI_2 \longrightarrow I_1=\frac{jI_2}{8+j2} \qquad (3)$$

$$2+(2+j6)I_2-jI_1=0 \qquad (4)$$

Solving (3) and (4) leads to $\mathbf{I}_2$ = -0.1055 +j0.2975, $\mathbf{V}_{ab}$=-j6$\mathbf{I}_2$ = 1.7853 +0.6332

$$Z_N=\frac{V_{ab}}{1}=\underline{1.894\angle19.53^o\,\Omega}$$

Chapter 13, Solution 17.

$$Z = -j6 \,//\, Z_o$$

where

$$Z_o = j20 + \frac{144}{j30 - j2 + j5 + 4} = 0.5213 + j15.7$$

$$Z = \frac{-j6xZ_o}{-j6 + Z_o} = \underline{0.1989 - j9.7\Omega}$$

Chapter 13, Solution 18.

Let $\omega = 1.$ $\quad L_1 = 5, L_2 = 20, M = k\sqrt{L_1 L_2} = 0.5x10 = 5$

We replace the transformer by its equivalent T-section.

$L_a = L_1 - (-M) = 5 + 5 = 10,$ $\quad L_b = L_1 + M = 20 + 5 = 25,$ $\quad L_c = -M = -5$

We find $\mathbf{Z}_{Th}$ using the circuit below.

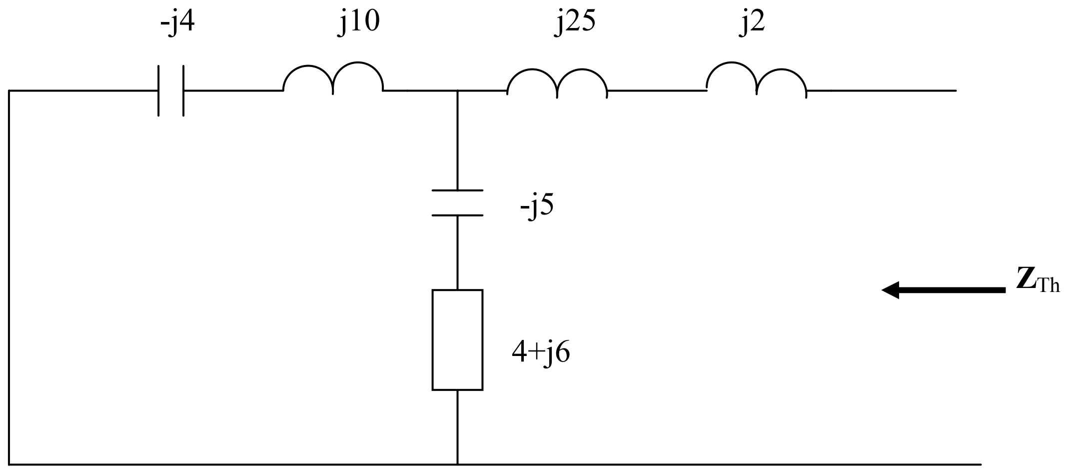

$$Z_{Th} = j27 + (4 + j)//(j6) = j27 + \frac{j6(4 + j)}{4 + j7} = \underline{2.215 + j29.12\Omega}$$

We find $\mathbf{V}_{Th}$ by looking at the circuit below.

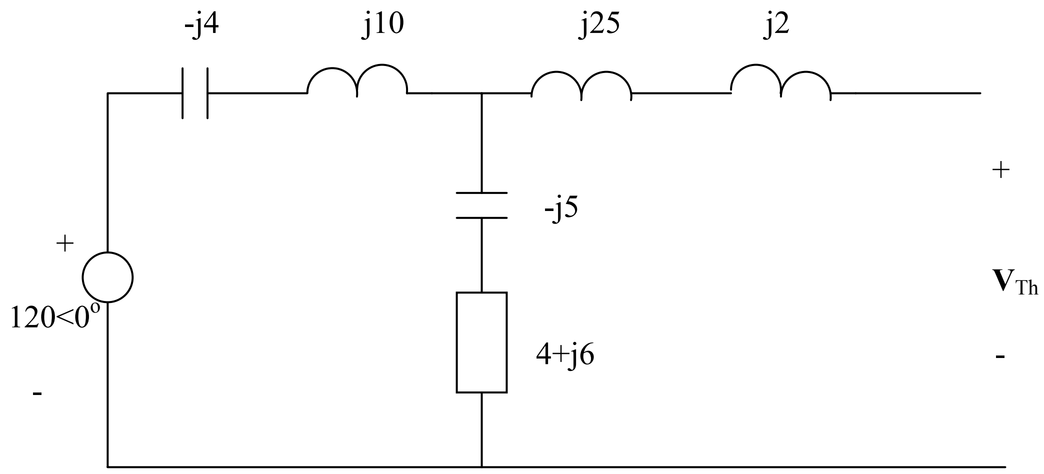

$$V_{Th} = \frac{4+j}{4+j+j6}(120) = \underline{61.37\angle -46.22^o \ \text{V}}$$

Chapter 13, Solution 19.

Let $\omega = 1$. $\quad L_a = L_1 - (-M) = 40 + 25 = 65\ \text{H}$

$L_b = L_2 + M = 30 + 25 = 55\ \text{H}, \quad \text{L}_\text{C} = -M = -25$

Thus, the T-section is as shown below.

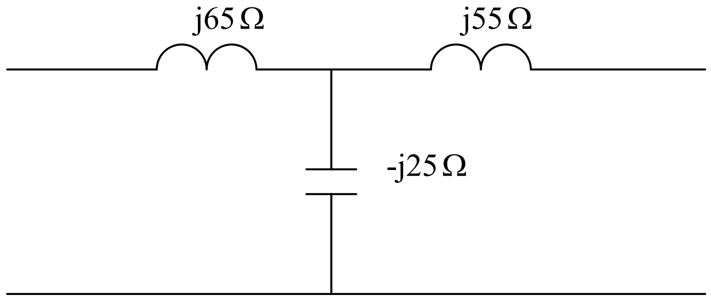

Chapter 13, Solution 20.

Transform the current source to a voltage source as shown below.

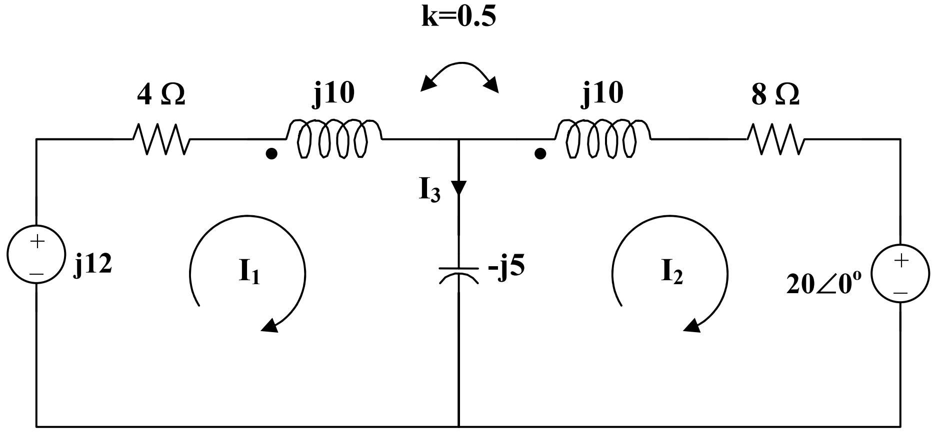

$$k = M/\sqrt{L_1L_2} \quad \text{or} \quad M = k\sqrt{L_1L_2}$$

$$\omega M = k\sqrt{\omega L_1 \omega L_2} = 0.5(10) = 5$$

For mesh 1, $\quad j12 = (4 + j10 - j5)I_1 + j5I_2 + j5I_2 = (4 + j5)I_1 + j10I_2 \qquad (1)$

For mesh 2, $\quad 0 = 20 + (8 + j10 - j5)I_2 + j5I_1 + j5I_1$

$$-20 = +j10I_1 + (8 + j5)I_2 \qquad (2)$$

From (1) and (2), $\begin{bmatrix} j12 \\ 20 \end{bmatrix} = \begin{bmatrix} 4 + j5 & +j10 \\ +j10 & 8 + j5 \end{bmatrix} \begin{bmatrix} I_1 \\ I_2 \end{bmatrix}$

$$\Delta = 107 + j60, \quad \Delta_1 = -60 - j296, \quad \Delta_2 = 40 - j100$$

$$I_1 = \Delta_1/\Delta = \underline{\mathbf{2.462\angle 72.18^\circ\ A}}$$

$$I_2 = \Delta_2/\Delta = \underline{\mathbf{0.878\angle -97.48^\circ\ A}}$$

$$I_3 = I_1 - I_2 = \underline{\mathbf{3.329\angle 74.89^\circ\ A}}$$

$$i_1 = 2.462\cos(1000t + 72.18^\circ)\ A$$

$$i_2 = 0.878\cos(1000t - 97.48^\circ)\ A$$

At $t = 2$ ms, $1000t = 2$ rad $= 114.6°$

$$i_1 = 0.9736\cos(114.6° + 143.09°) = -2.445$$

$$i_2 = 2.53\cos(114.6° + 153.61°) = -0.8391$$

The total energy stored in the coupled coils is

$$w = 0.5L_1 i_1^2 + 0.5L_2 i_2^2 - Mi_1 i_2$$

Since $\omega L_1 = 10$ and $\omega = 1000$, $L_1 = L_2 = 10$ mH, $M = 0.5L_1 = 5$mH

$$w = 0.5(10)(-2.445)^2 + 0.5(10)(-0.8391)^2 - 5(-2.445)(-0.8391)$$

w = <u>43.67 mJ</u>

Chapter 13, Solution 21.

For mesh 1, $36\angle 30° = (7 + j6)I_1 - (2 + j)I_2$ (1)

For mesh 2, $0 = (6 + j3 - j4)I_2 - 2I_1\ jI_1 = -(2 + j)I_1 + (6 - j)I_2$ (2)

Placing (1) and (2) into matrix form, $\begin{bmatrix} 36\angle 30° \\ 0 \end{bmatrix} = \begin{bmatrix} 7 + j6 & -2 - j \\ -2 - j & 6 - j \end{bmatrix}\begin{bmatrix} I_1 \\ I_2 \end{bmatrix}$

$\Delta = 48 + j35 = 59.41\angle 36.1°$, $\Delta_1 = (6 - j)36\angle 30° = 219\angle 20.54°$

$\Delta_2 = (2 + j)36\angle 30° = 80.5\angle 56.56°$, $I_1 = \Delta_1/\Delta = 3.69\angle -15.56°$, $I_2 = \Delta_2/\Delta = 1.355\angle 20.46°$

Power absorbed fy the 4-ohm resistor, $= 0.5(I_2)^2 4 = 2(1.355)^2 =$ **<u>3.672 watts</u>**

Chapter 13, Solution 22.

With more complex mutually coupled circuits, it may be easier to show the effects of the coupling as sources in terms of currents that enter or leave the dot side of the coil. Figure 13.85 then becomes,

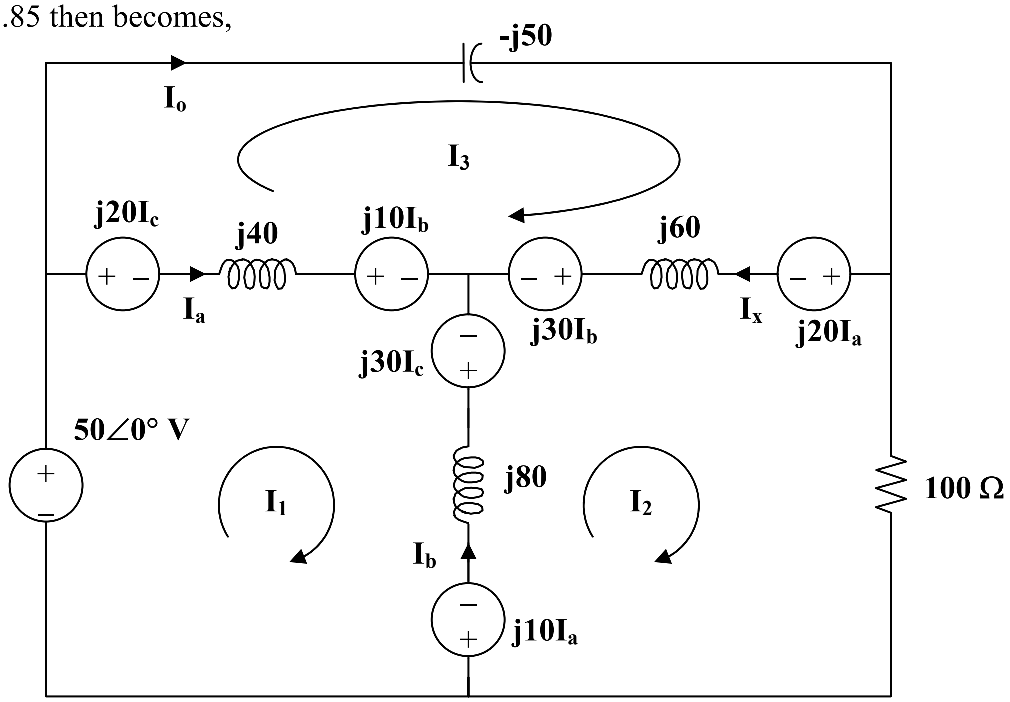

Note the following,

$$I_a = I_1 - I_3$$
$$I_b = I_2 - I_1$$
$$I_c = I_3 - I_2$$

$$\text{and} \quad I_o = I_3$$

Now all we need to do is to write the mesh equations and to solve for I_o.

Loop # 1,

$$-50 + j20(I_3 - I_2)\ j\ 40(I_1 - I_3) + j10(I_2 - I_1) - j30(I_3 - I_2) + j80(I_1 - I_2) - j10(I_1 - I_3) = 0$$

$$j100I_1 - j60I_2 - j40I_3 = 50$$

Multiplying everything by (1/j10) yields $10I_1 - 6I_2 - 4I_3 = -j5$ (1)

Loop # 2,

$$j10(I_1 - I_3) + j80(I_2 - I_1) + j30(I_3 - I_2) - j30(I_2 - I_1) + j60(I_2 - I_3) - j20(I_1 - I_3) + 100I_2 = 0$$

$$-j60I_1 + (100 + j80)I_2 - j20I_3 = 0 \quad (2)$$

Loop # 3,

$$-j50I_3 + j20(I_1 - I_3) + j60(I_3 - I_2) + j30(I_2 - I_1) - j10(I_2 - I_1) + j40(I_3 - I_1) - j20(I_3 - I_2) = 0$$

$$-j40I_1 - j20I_2 + j10I_3 = 0$$

Multiplying by (1/j10) yields, $-4I_1 - 2I_2 + I_3 = 0$ (3)

Multiplying (2) by (1/j20) yields $-3I_1 + (4 - j5)I_2 - I_3 = 0$ (4)

Multiplying (3) by (1/4) yields $-I_1 - 0.5I_2 - 0.25I_3 = 0$ (5)

Multiplying (4) by (-1/3) yields $I_1 - ((4/3) - j(5/3))I_2 + (1/3)I_3 = -j0.5$ (7)

Multiplying [(6)+(5)] by 12 yields $(-22 + j20)I_2 + 7I_3 = 0$ (8)

Multiplying [(5)+(7)] by 20 yields $-22I_2 - 3I_3 = -j10$ (9)

(8) leads to $I_2 = -7I_3/(-22 + j20) = 0.2355\angle 42.3^\circ = (0.17418 + j0.15849)I_3$ (10)

(9) leads to $I_3 = (j10 - 22I_2)/3$, substituting (1) into this equation produces,

$$I_3 = j3.333 + (-1.2273 - j1.1623)I_3$$

or $I_3 = I_o =$ **$1.3040\angle 63^\circ$ amp.**

Chapter 13, Solution 23.

$\omega = 10$

0.5 H converts to $j\omega L_1 = j5$ ohms

1 H converts to $j\omega L_2 = j10$ ohms

0.2 H converts to $j\omega M = j2$ ohms

25 mF converts to $1/(j\omega C) = 1/(10\text{x}25\text{x}10^{-3}) = -j4$ ohms

The frequency-domain equivalent circuit is shown below.

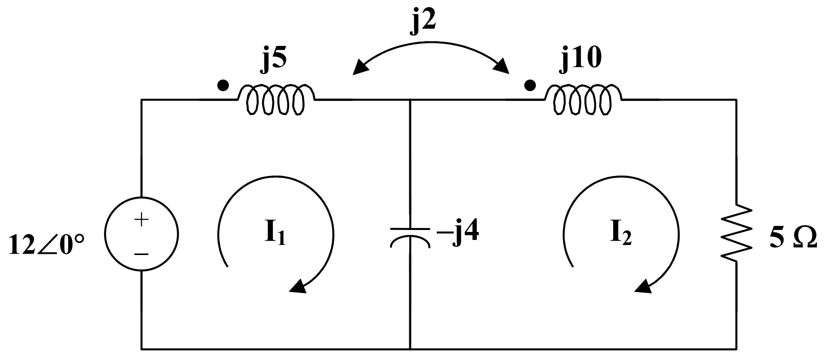

For mesh 1, $12 = (j5 - j4)I_1 + j2I_2 - (-j4)I_2$

$$-j2 = I_1 + 6I_2 \quad (1)$$

For mesh 2, $0 = (5 + j10)I_2 + j2I_1 - (-j4)I_1$

$$0 = (5 + j10)I_2 + j6I_1 \quad (2)$$

From (1), $I_1 = -j12 - 6I_2$

Substituting this into (2) produces,

$$I_2 = 72/(-5 + j26) = 2.7194\angle{-100.89^\circ}$$

$$I_1 = -j12 - 6\,I_2 = -j12 - 163.17\angle{-100.89} = 5.068\angle{52.54^\circ}$$

Hence, $i_1 =$ **$5.068\cos(10t + 52.54^\circ)$ A**, $i_2 =$ **$2.719\cos(10t - 100.89^\circ)$ A**.

At $t = 15$ ms, $10t = 10\text{x}15\text{x}10^{-3}\ 0.15 \text{ rad} = 8.59^\circ$

$$i_1 = 5.068\cos(61.13^\circ) = 2.446$$

$$i_2 = 2.719\cos(-92.3^\circ) = -0.1089$$

$$w = 0.5(5)(2.446)^2 + 0.5(1)(-0.1089)^2 - (0.2)(2.446)(-0.1089) = \mathbf{\underline{15.02\ J}}$$

Chapter 13, Solution 24.

(a) $k = M/\sqrt{L_1L_2} = 1/\sqrt{4\text{x}2} = \mathbf{\underline{0.3535}}$

(b) $\omega = 4$

1/4 F leads to $1/(j\omega C) = -j/(4\text{x}0.25) = -j$

$1||(-j) = -j/(1 - j) = 0.5(1 - j)$

1 H produces $j\omega M = j4$

4 H produces $j16$

2 H becomes $j8$

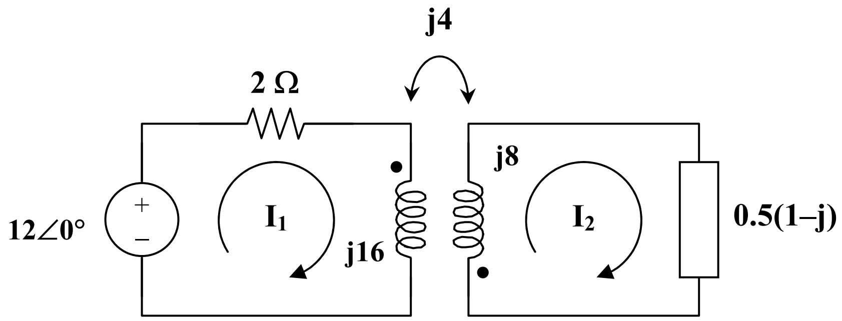

$$12 = (2 + j16)I_1 + j4I_2$$

$$\text{or} \qquad 6 = (1 + j8)I_1 + j2I_2 \qquad (1)$$

$$0 = (j8 + 0.5 - j0.5)I_2 + j4I_1 \;\text{ or }\; I_1 = (0.5 + j7.5)I_2/(-j4) \qquad (2)$$

Substituting (2) into (1),

$$24 = (-11.5 - j51.5)I_2 \;\text{ or }\; I_2 = -24/(11.5 + j51.5) = -0.455\angle -77.41°$$

$$V_o = I_2(0.5)(1 - j) = 0.3217\angle 57.59°$$

v_o = **321.7cos(4t + 57.6°) mV**

(c) From (2), $I_1 = (0.5 + j7.5)I_2/(-j4) = 0.855\angle -81.21°$

$$i_1 = 0.885\cos(4t - 81.21°)\text{ A},\; i_2 = -0.455\cos(4t - 77.41°)\text{ A}$$

At t = 2s,

$$4t = 8\text{ rad} = 98.37°$$

$$i_1 = 0.885\cos(98.37° - 81.21°) = 0.8169$$

$$i_2 = -0.455\cos(98.37° - 77.41°) = -0.4249$$

$$w = 0.5L_1i_1^2 + 0.5L_2i_2^2 + Mi_1i_2$$

$$= 0.5(4)(0.8169)^2 + 0.5(2)(-.4249)^2 + (1)(0.1869)(-0.4249) = \underline{\mathbf{1.168\ J}}$$

Chapter 13, Solution 25.

$$m = k\sqrt{L_1 L_2} = 0.5\ \text{H}$$

We transform the circuit to frequency domain as shown below.

12sin2t converts to $12\angle 0°$, $\omega = 2$

0.5 F converts to $1/(j\omega C) = -j$

2 H becomes $j\omega L = j4$

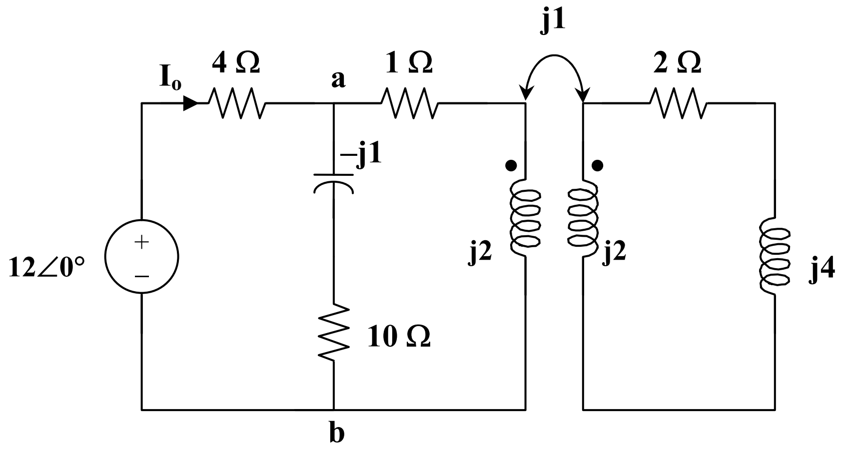

Applying the concept of reflected impedance,

$$Z_{ab} = (2 - j)||(1 + j2 + (1)^2/(j2 + 3 + j4))$$

$$= (2 - j)||(1 + j2 + (3/45) - j6/45)$$

$$= (2 - j)||(1 + j2 + (3/45) - j6/45)$$

$$= (2 - j)||(1.0667 + j1.8667)$$

$$=(2 - j)(1.0667 + j1.8667)/(3.0667 + j0.8667) = 1.5085\angle 17.9°\ \text{ohms}$$

$$I_o = 12\angle 0°/(Z_{ab} + 4) = 12/(5.4355 + j0.4636) = 2.2\angle{-4.88}°$$

i_o = **$\underline{2.2\sin(2t - 4.88°)\ \text{A}}$**

Chapter 13, Solution 26.

$$M = k\sqrt{L_1 L_2}$$

$$\omega M = k\sqrt{\omega L_1 \omega L_2} = 0.6\sqrt{20x40} = 17$$

The frequency-domain equivalent circuit is shown below.

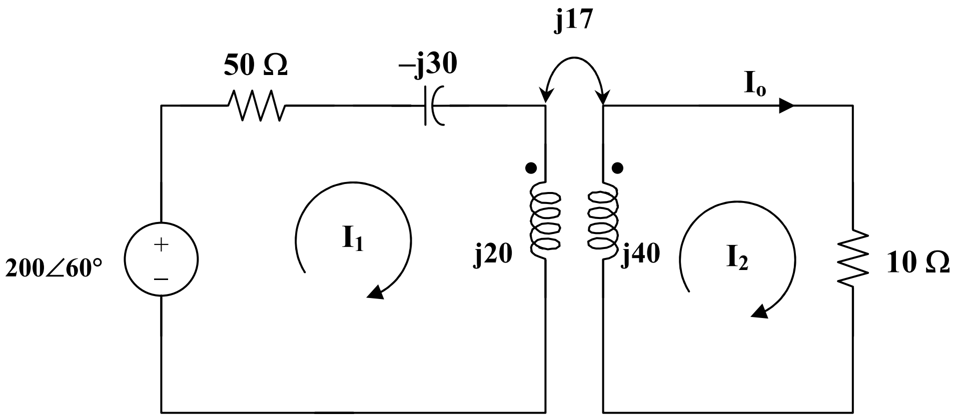

For mesh 1,

$$200\angle 60° = (50 - j30 + j20)I_1 + j17I_2 = (50 - j10)I_1 + j17I_2 \qquad (1)$$

For mesh 2,

$$0 = (10 + j40)I_2 + j17I_1 \qquad (2)$$

In matrix form, $\begin{bmatrix} 200\angle 60° \\ 0 \end{bmatrix} = \begin{bmatrix} 50 - j10 & j17 \\ j17 & 10 + j40 \end{bmatrix} \begin{bmatrix} I_1 \\ I_2 \end{bmatrix}$

$\Delta = 900 + j100$, $\Delta_1 = 2000\angle 60°(1 + j4) = 8246.2\angle 136°$, $\Delta_2 = 3400\angle -30°$

$I_2 = \Delta_2/\Delta = 3.755\angle -36.34°$

$I_o = I_2 =$ **$\underline{3.755\angle -36.34°\ A}$**

Switching the dot on the winding on the right only reverses the direction of I_o. This can be seen by looking at the resulting value of Δ_2 which now becomes $3400\angle 150°$. Thus,

$I_o =$ **$\underline{3.755\angle 143.66°\ A}$**

Chapter 13, Solution 27.

Z_{in} = –j4 + j5 + 9/(12 + j6) = 0.6 + j.07 = 0.922∠49.4°

I_1 = 12∠0°/0.922∠49.4° = **<u>13∠–49.4° A</u>**

Chapter 13, Solution 28.

We find Z_{Th} by replacing the 20-ohm load with a unit source as shown below.

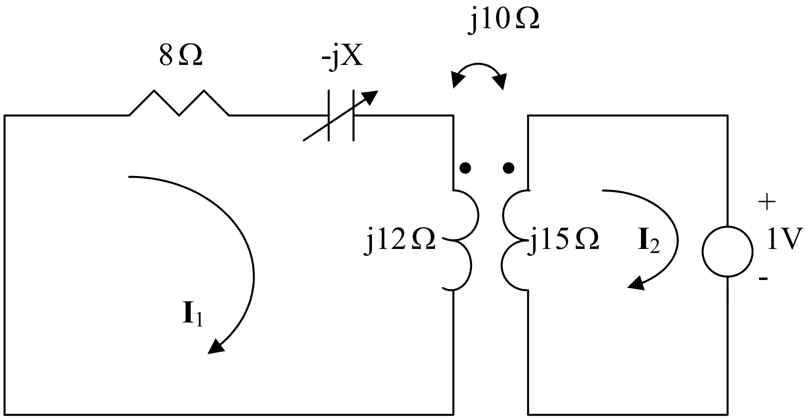

For mesh 1, $0 = (8 - jX + j12)I_1 - j10I_2$ (1)

For mesh 2, $1 + j15I_2 - j10I_1 = 0 \longrightarrow I_1 = 1.5I_2 - 0.1j$ (2)

Substituting (2) into (1) leads to

$$I_2 = \frac{-1.2 + j0.8 + 0.1X}{12 + j8 - j1.5X}$$

$$Z_{Th} = \frac{1}{-I_2} = \frac{12 + j8 - j1.5X}{1.2 - j0.8 - 0.1X}$$

$$|Z_{Th}| = 20 = \frac{\sqrt{12^2 + (8 - 1.5X)^2}}{\sqrt{(1.2 - 0.1X)^2 + 0.8^2}} \longrightarrow 0 = 1.75X^2 + 72X - 624$$

Solving the quadratic equation yields **<u>X = 6.425</u>**

Chapter 13, Solution 29.

30 mH becomes $j\omega L = j30x10^{-3}x10^{3} = j30$

50 mH becomes j50

Let $X = \omega M$

Using the concept of reflected impedance,

$$Z_{in} = 10 + j30 + X^2/(20 + j50)$$

$$I_1 = V/Z_{in} = 165/(10 + j30 + X^2/(20 + j50))$$

$$p = 0.5|I_1|^2(10) = 320 \text{ leads to } |I_1|^2 = 64 \text{ or } |I_1| = 8$$

$$8 = |165(20 + j50)/(X^2 + (10 + j30)(20 + j50))|$$

$$= |165(20 + j50)/(X^2 - 1300 + j1100)|$$

or $$64 = 27225(400 + 2500)/((X^2 - 1300)^2 + 1{,}210{,}000)$$

$$(X^2 - 1300)^2 + 1{,}210{,}000 = 1{,}233{,}633$$

$$X = 33.86 \text{ or } 38.13$$

If $X = 38.127 = \omega M$

$$M = 38.127 \text{ mH}$$

$$k = M/\sqrt{L_1L_2} = 38.127/\sqrt{30x50} = \underline{\mathbf{0.984}}$$

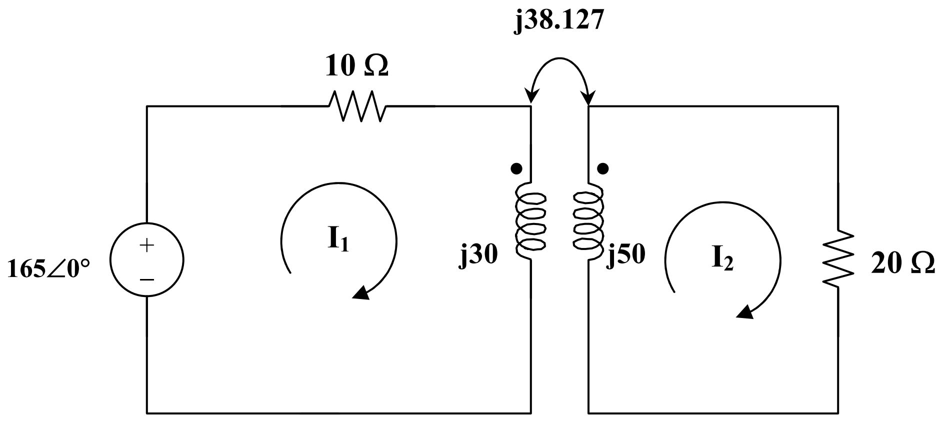

$165 = (10 + j30)I_1 - j38.127I_2$ (1)

$0 = (20 + j50)I_2 - j38.127I_1$ (2)

In matrix form, $\begin{bmatrix} 165 \\ 0 \end{bmatrix} = \begin{bmatrix} 10 + j30 & -j38.127 \\ -j38.127 & 20 + j50 \end{bmatrix} \begin{bmatrix} I_1 \\ I_2 \end{bmatrix}$

$\Delta = 154 + j1100 = 1110.73\angle 82.03°$, $\Delta_1 = 888.5\angle 68.2°$, $\Delta_2 = j6291$

$I_1 = \Delta_1/\Delta = 8\angle{-13.81°}$, $I_2 = \Delta_2/\Delta = 5.664\angle 7.97°$

$i_1 = 8\cos(1000t - 13.83°)$, $i_2 = 5.664\cos(1000t + 7.97°)$

At $t = 1.5$ ms, $1000t = 1.5$ rad $= 85.94°$

$i_1 = 8\cos(85.94° - 13.83°) = 2.457$

$i_2 = 5.664\cos(85.94° + 7.97°) = -0.3862$

$w = 0.5L_1i_1^2 + 0.5L_2i_2^2 + Mi_1i_2$

$= 0.5(30)(2.547)^2 + 0.5(50)(-0.3862)^2 - 38.127(2.547)(-0.3862)$

$=$ **<u>130.51 mJ</u>**

Chapter 13, Solution 30.

(a) $Z_{in} = j40 + 25 + j30 + (10)^2/(8 + j20 - j6)$
$= 25 + j70 + 100/(8 + j14) =$ **<u>(28.08 + j64.62) ohms</u>**

(b) $j\omega L_a = j30 - j10 = j20$, $j\omega L_b = j20 - j10 = j10$, $j\omega L_c = j10$

Thus the Thevenin Equivalent of the linear transformer is shown below.

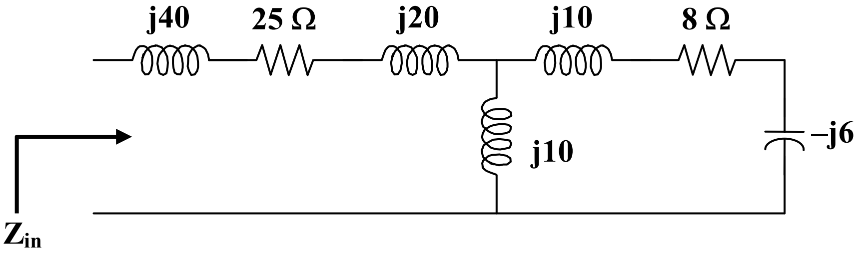

$Z_{in} = j40 + 25 + j20 + j10||(8 + j4) = 25 + j60 + j10(8 + j4)/(8 + j14)$

$=$ **<u>(28.08 + j64.62) ohms</u>**

Chapter 13, Solution 31.

(a) $L_a = L_1 - M = \underline{\mathbf{10\ H}}$

$L_b = L_2 - M = \underline{\mathbf{15\ H}}$

$L_c = M = \underline{\mathbf{5\ H}}$

(b) $L_1L_2 - M^2 = 300 - 25 = 275$

$L_A = (L_1L_2 - M^2)/(L_1 - M) = 275/15 = \underline{\mathbf{18.33\ H}}$

$L_B = (L_1L_2 - M^2)/(L_1 - M) = 275/10 = \underline{\mathbf{27.5\ H}}$

$L_C = (L_1L_2 - M^2)/M = 275/5 = \underline{\mathbf{55\ H}}$

Chapter 13, Solution 32.

We first find Z_{in} for the second stage using the concept of reflected impedance.

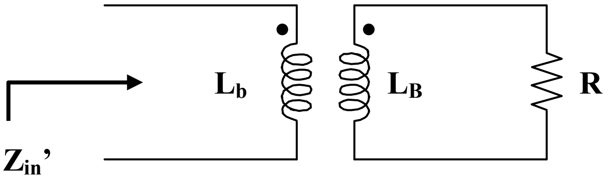

$Z_{in}' = j\omega L_b + \omega^2 M_b^2/(R + j\omega L_b) = (j\omega L_b R - \omega^2 L_b^2 + \omega^2 M_b^2)/(R + j\omega L_b)$ (1)

For the first stage, we have the circuit below.

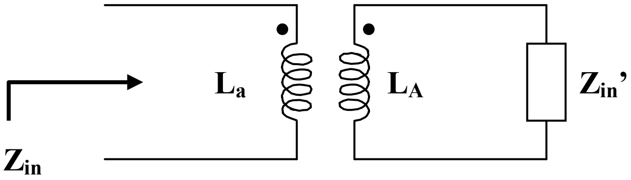

$Z_{in} = j\omega L_a + \omega^2 M_a^2/(j\omega L_a + Z_{in})$

$= (-\omega^2 L_a^2 + \omega^2 M_a^2 + j\omega L_a Z_{in})/(j\omega L_a + Z_{in})$ (2)

Substituting (1) into (2) gives,

$$= \frac{-\omega^2 L_a^2 + \omega^2 M_a^2 + j\omega L_a \dfrac{(j\omega L_b R - \omega^2 L_b^2 + \omega^2 M_b^2)}{R + j\omega L_b}}{j\omega L_a + \dfrac{j\omega L_b R - \omega^2 L_b^2 + \omega^2 M_b^2}{R + j\omega L_b}}$$

$$= \frac{-R\omega^2 L_a^2 + \omega^2 M_a^2 R - j\omega^3 L_b L_a + j\omega^3 L_b M_a^2 + j\omega L_a(j\omega L_b R - \omega^2 L_b^2 + \omega^2 M_b^2)}{j\omega R La - \omega^2 L_a L_b + j\omega L_b R - \omega^2 L_a^2 + \omega^2 M_b^2}$$

$$Z_{in} = \underline{\frac{\boldsymbol{\omega^2 R(L_a^2 + L_a L_b - M_a^2) + j\omega^3(L_a^2 L_b + L_a L_b^2 - L_a M_b^2 - L_b M_a^2)}}{\boldsymbol{\omega^2(L_a L_b + L_b^2 - M_b^2) - j\omega R(L_a + L_b)}}}$$

Chapter 13, Solution 33.

$Z_{in} = 10 + j12 + (15)^2/(20 + j\,40 - j5) = 10 + j12 + 225/(20 + j35)$

$= 10 + j12 + 225(20 - j35)/(400 + 1225)$

$= \underline{(12.769 + j7.154)\ \text{ohms}}$

Chapter 13, Solution 34.

Insert a 1-V voltage source at the input as shown below.

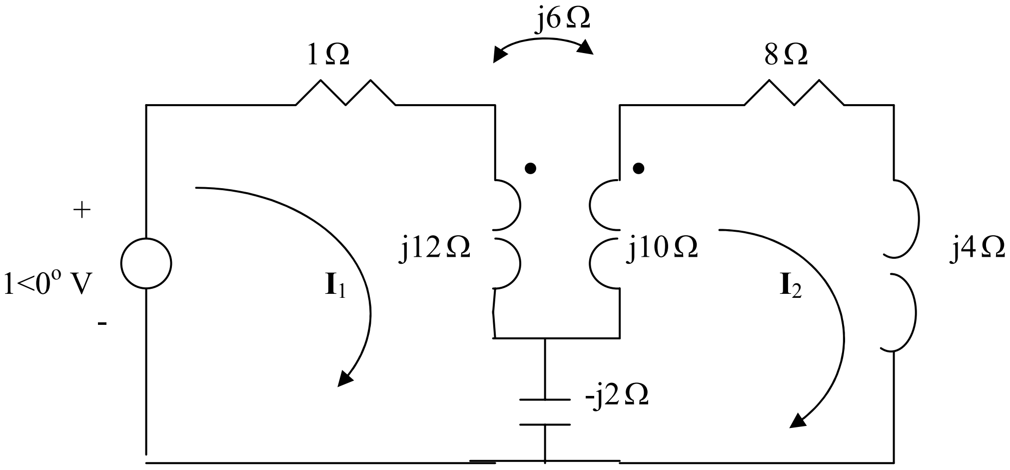

For loop 1,

$$1 = (1 + j10)I_1 - j4I_2 \qquad (1)$$

For loop 2,

$$0 = (8 + j4 + j10 - j2)I_2 + j2I_1 - j6I_1 \quad \longrightarrow \quad 0 = -jI_1 + (2 + j3)I_2 \qquad (2)$$

Solving (1) and (2) leads to $\mathbf{I}_1$=0.019 –j0.1068

$$Z = \frac{1}{I_1} = 1.6154 + j9.077 = \underline{9.219\angle 79.91^o\,\Omega}$$

Alternatively, an easier way to obtain **Z** is to replace the transformer with its equivalent T circuit and use series/parallel impedance combinations. This leads to exactly the same result.

Chapter 13, Solution 35.

For mesh 1, $16 = (10 + j4)I_1 + j2I_2$ (1)

For mesh 2, $0 = j2I_1 + (30 + j26)I_2 - j12I_3$ (2)

For mesh 3, $0 = -j12I_2 + (5 + j11)I_3$ (3)

We may use MATLAB to solve (1) to (3) and obtain

$$I_1 = 1.3736 - j0.5385 = \underline{1.4754\angle -21.41^o\ \text{A}}$$
$$I_2 = -0.0547 - j0.0549 = \underline{0.0775\angle -134.85^o\ \text{A}}$$
$$I_3 = -0.0268 - j0.0721 = \underline{0.077\angle -110.41^o\ \text{A}}$$

Chapter 13, Solution 36.

Following the two rules in section 13.5, we obtain the following:

(a) $V_2/V_1 = \underline{\mathbf{-n}}$, $I_2/I_1 = \underline{\mathbf{-1/n}}$ $(n = V_2/V_1)$

(b) $V_2/V_1 = \underline{\mathbf{-n}}$, $I_2/I_1 = \underline{\mathbf{-1/n}}$

(c) $V_2/V_1 = \underline{\mathbf{n}}$, $I_2/I_1 = \underline{\mathbf{1/n}}$

(d) $V_2/V_1 = \underline{\mathbf{n}}$, $I_2/I_1 = \underline{\mathbf{-1/n}}$

Chapter 13, Solution 37.

(a) $n = \frac{V_2}{V_1} = \frac{2400}{480} = \underline{5}$

(b) $S_1 = I_1V_1 = S_2 = I_2V_2 = 50{,}000 \longrightarrow I_1 = \frac{50{,}000}{480} = \underline{104.17\text{ A}}$

(c) $I_2 = \frac{50{,}000}{2400} = \underline{20.83\text{ A}}$

Chapter 13, Solution 38.

$Z_{in} = Z_p + Z_L/n^2$, $n = v_2/v_1 = 230/2300 = 0.1$

$v_2 = 230$ V, $s_2 = v_2I_2^*$

$I_2^* = s_2/v_2 = 17.391\angle{-53.13°}$ or $I_2 = 17.391\angle 53.13°$ A

$Z_L = v_2/I_2 = 230\angle 0°/17.391\angle 53.13° = 13.235\angle{-53.13°}$

$Z_{in} = 2\angle 10° + 1323.5\angle{-53.13°}$

$= 1.97 + j0.3473 + 794.1 - j1058.8$

$Z_{in} =$ $\underline{\mathbf{1.324\angle{-53.05°}\ kohms}}$

Chapter 13, Solution 39.

Referred to the high-voltage side,

$Z_L = (1200/240)^2(0.8\angle 10°) = 20\angle 10°$

$Z_{in} = 60\angle{-30°} + 20\angle 10° = 76.4122\angle{-20.31°}$

$I_1 = 1200/Z_{in} = 1200/76.4122\angle{-20.31°} =$ $\underline{\mathbf{15.7\angle 20.31°\ A}}$

Since $S = I_1v_1 = I_2v_2$, $I_2 = I_1v_1/v_2$

$= (1200/240)(15.7\angle 20.31°) =$ $\underline{\mathbf{78.5\angle 20.31°\ A}}$

Chapter 13, Solution 40.

$$n = \frac{N_2}{N_1} = \frac{500}{2000} = \frac{1}{4}, \quad n = \frac{V_2}{V_1} \quad \longrightarrow \quad V_2 = nV_1 = \frac{1}{4}(240) = 60\text{ V}$$

$$P = \frac{V^2}{R} = \frac{60^2}{12} = \underline{300\text{ W}}$$

Chapter 13, Solution 41.

We reflect the 2-ohm resistor to the primary side.

$Z_{in} = 10 + 2/n^2, \quad n = -1/3$

Since both I_1 and I_2 enter the dotted terminals, $Z_{in} = 10 + 18 = 28$ ohms

$I_1 = 14\angle 0°/28 = \underline{\mathbf{0.5\ A}}$ and $I_2 = I_1/n = 0.5/(-1/3) = \underline{\mathbf{-1.5\ A}}$

Chapter 13, Solution 42.

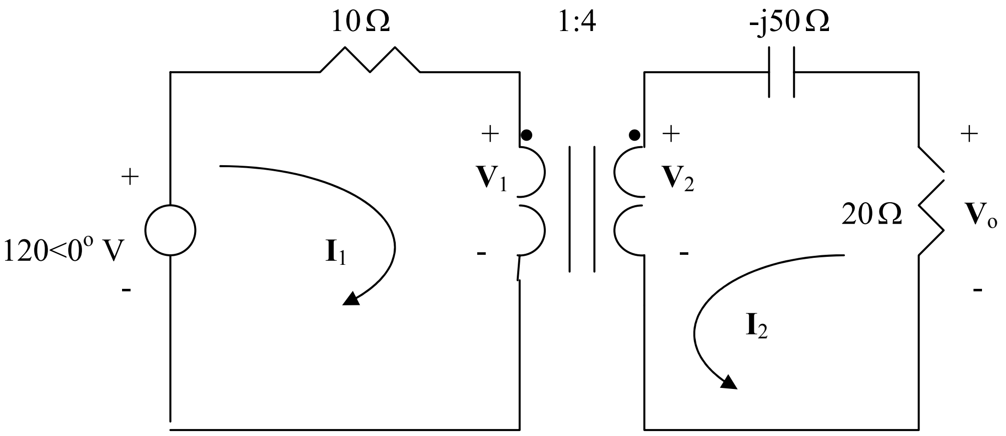

Applying mesh analysis,

$$120 = 10I_1 + V_1 \qquad (1)$$

$$0 = (20 - j50)I_2 + V_2 \qquad (2)$$

At the terminals of the transformer,

$$\frac{V_2}{V_1} = n = 4 \quad \longrightarrow \quad V_2 = 4V_1 \qquad (3)$$

$$\frac{I_2}{I_1} = -\frac{1}{n} = -\frac{1}{4} \quad \longrightarrow \quad I_1 = -4I_2 \qquad (4)$$

Substituting (3) and (4) into (1) gives $120 = -40I_2 + 0.25V_2$ (5)

Solving (2) and (5) yields $I_2 = -2.4756 - j0.6877$

$$V_o = -20I_2 = \underline{51.39\angle 15.52^o \ \text{V}}$$

Chapter 13, Solution 43.

Transform the two current sources to voltage sources, as shown below.

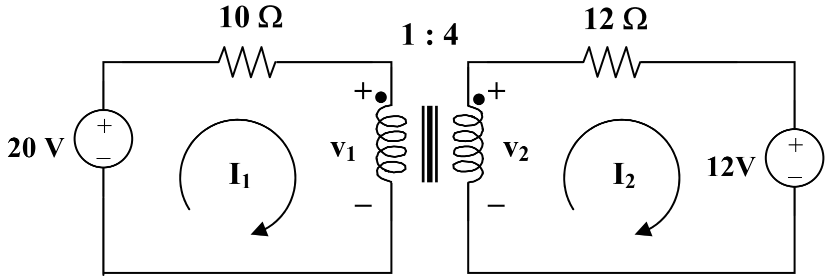

Using mesh analysis, $-20 + 10I_1 + v_1 = 0$

$$20 = v_1 + 10I_1 \qquad (1)$$

$$12 + 12I_2 - v_2 = 0 \ \text{ or } \ 12 = v_2 - 12I_2 \qquad (2)$$

At the transformer terminal, $v_2 = nv_1 = 4v_1$ (3)

$$I_1 = nI_2 = 4I_2 \qquad (4)$$

Substituting (3) and (4) into (1) and (2), we get,

$$20 = v_1 + 40I_2 \qquad (5)$$

$$12 = 4v_1 - 12I_2 \qquad (6)$$

Solving (5) and (6) gives v_1 = <u>**4.186 V**</u> and $v_2 = 4v$ = <u>**16.744 V**</u>

Chapter 13, Solution 44.

We can apply the superposition theorem. Let $i_1 = i_1' + i_1''$ and $i_2 = i_2' + i_2''$ where the single prime is due to the DC source and the double prime is due to the AC source. Since we are looking for the steady-state values of i_1 and i_2,

$$i_1' = i_2' = 0.$$

For the AC source, consider the circuit below.

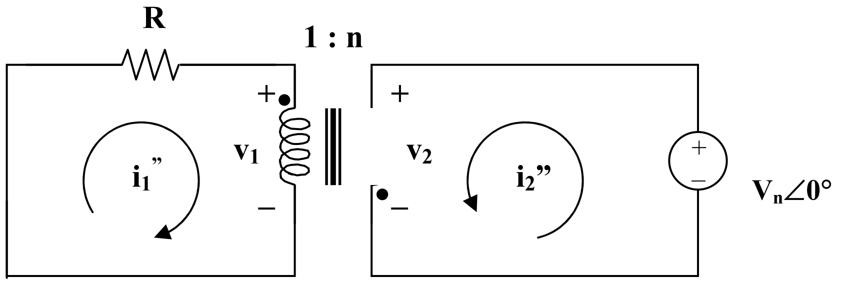

$$v_2/v_1 = -n, \quad I_2''/I_1'' = -1/n$$

But $v_2 = v_m$, $v_1 = -v_m/n$ or $I_1'' = v_m/(Rn)$

$$I_2'' = -I_1''/n = -v_m/(Rn^2)$$

Hence, $i_1(t) =$ **$(v_m/Rn)\cos\omega t$ A**, and $i_2(t) =$ **$(-v_m/(n^2R))\cos\omega t$ A**

Chapter 13, Solution 45.

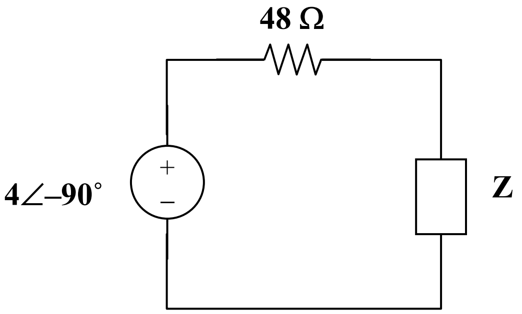

$$Z_L = 8 - \frac{j}{\omega C} = 8 - j4, \; n = 1/3$$

$$Z = \frac{Z_L}{n^2} = 9Z_L = 72 - j36$$

$$I = \frac{4\angle -90°}{48 + 72 - j36} = \frac{4\angle -90°}{125.28\angle -16.7°} = 0.03193\angle -73.3°$$

We now have some choices, we can go ahead and calculate the current in the second loop and calculate the power delivered to the 8-ohm resistor directly or we can merely say that the power delivered to the equivalent resistor in the primary side must be the same as the power delivered to the 8-ohm resistor. Therefore,

$$P_{8\Omega} = \left|\frac{I}{2}\right|^2 72 = 0.5098\text{x}10^{-3}72 = \underline{\textbf{36.71 mW}}$$

The student is encouraged to calculate the current in the secondary and calculate the power delivered to the 8-ohm resistor to verify that the above is correct.

Chapter 13, Solution 46.

(a) Reflecting the secondary circuit to the primary, we have the circuit shown below.

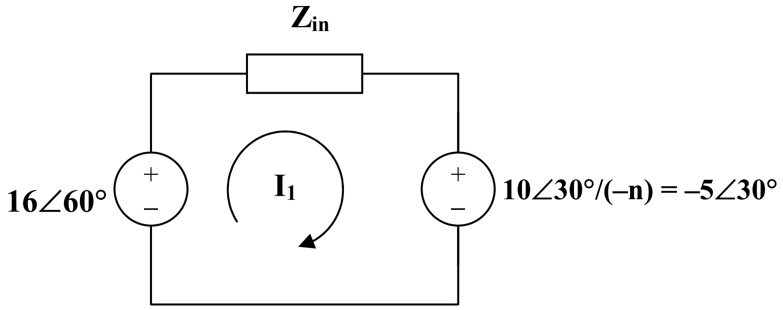

$Z_{in} = 10 + j16 + (1/4)(12 - j8) = 13 + j14$

$-16\angle 60° + Z_{in}I_1 - 5\angle 30° = 0$ or $I_1 = (16\angle 60° + 5\angle 30°)/(13 + j14)$

Hence, $I_1 = \underline{\mathbf{1.072\angle 5.88°\ A}}$, and $I_2 = -0.5I_1 = \underline{\mathbf{0.536\angle 185.88°\ A}}$

(b) Switching a dot will not effect Z_{in} but will effect I_1 and I_2.

$I_1 = (16\angle 60° - 5\angle 30°)/(13 + j14) = \underline{\mathbf{0.625\ \angle 25\ A}}$

and $I_2 = 0.5I_1 = \underline{\mathbf{0.3125\angle 25°\ A}}$

Chapter 13, Solution 47.

0.02 F becomes $1/(j\omega C) = 1/(j5x0.02) = -j10$

We apply mesh analysis to the circuit shown below.

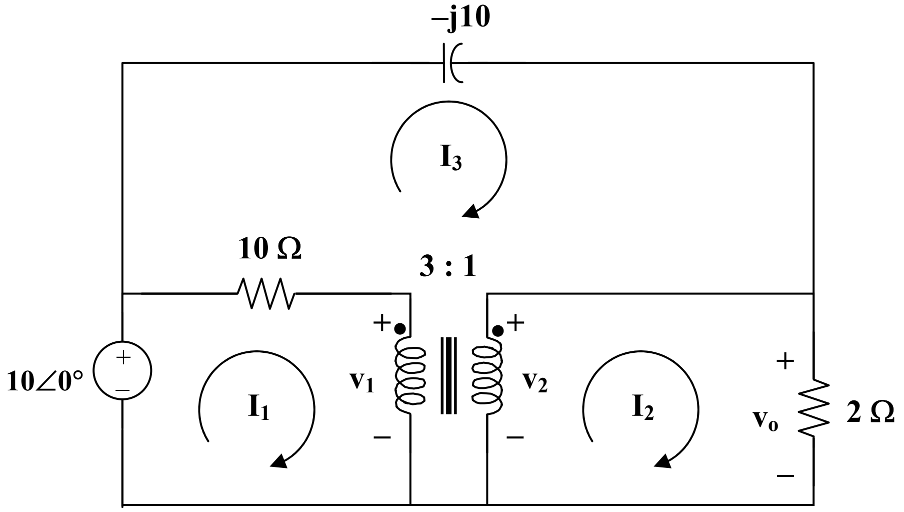

For mesh 1, $10 = 10I_1 - 10I_3 + v_1$ (1)

For mesh 2, $v_2 = 2I_2 = v_o$ (2)

For mesh 3, $0 = (10 - j10)I_3 - 10I_1 + v_2 - v_1$ (3)

At the terminals, $v_2 = nv_1 = v_1/3$ (4)

$I_1 = nI_2 = I_2/3$ (5)

From (2) and (4), $v_1 = 6I_2$ (6)

Substituting this into (1), $10 = 10I_1 - 10I_3$ (7)

Substituting (4) and (6) into (3) yields

$0 = -10I_1 - 4I_2 + 10(1 - j)I_3$ (8)

From (5), (7), and (8)

$$\begin{bmatrix} 1 & -0.333 & 0 \\ 10 & 6 & -10 \\ -10 & -4 & 10-j10 \end{bmatrix} \begin{bmatrix} I_1 \\ I_2 \\ I_3 \end{bmatrix} = \begin{bmatrix} 0 \\ 10 \\ 0 \end{bmatrix}$$

$$I_2 = \frac{\Delta_2}{\Delta} = \frac{100 - j100}{-20 - j93.33} = 1.482\angle 32.9°$$

$$v_o = 2I_2 = \underline{\mathbf{2.963\angle 32.9°\ V}}$$

(a) Switching the dot on the secondary side effects only equations (4) and (5).

$$v_2 = -v_1/3 \qquad (9)$$

$$I_1 = -I_2/3 \qquad (10)$$

From (2) and (9), $v_1 = -6I_2$

Substituting this into (1),

$$10 = 10I_1 - 10I_3 - 6I_2 = (23 - j5)I_1 \qquad (11)$$

Substituting (9) and (10) into (3),

$$0 = -10I_1 + 4I_2 + 10(1 - j)I_3 \qquad (12)$$

From (10) to (12), we get

$$\begin{bmatrix} 1 & 0.333 & 0 \\ 10 & -6 & -10 \\ -10 & 4 & 10 - j10 \end{bmatrix} \begin{bmatrix} I_1 \\ I_2 \\ I_3 \end{bmatrix} = \begin{bmatrix} 0 \\ 10 \\ 0 \end{bmatrix}$$

$$I_2 = \frac{\Delta_2}{\Delta} = \frac{100 - j100}{-20 + j93.33} = 1.482\angle -147.1°$$

$$v_o = 2I_2 = \underline{\mathbf{2.963\angle -147.1°\ V}}$$

Chapter 13, Solution 48.

We apply mesh analysis.

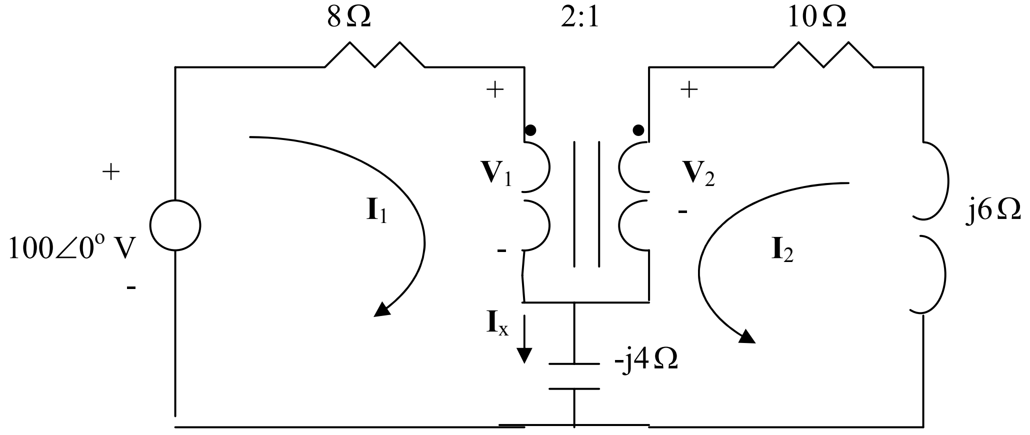

$$100 = (8 - j4)I_1 - j4I_2 + V_1 \qquad (1)$$

$$0 = (10 + j2)I_2 - j4I_1 + V_2 \qquad (2)$$

But

$$\frac{V_2}{V_1} = n = \frac{1}{2} \longrightarrow V_1 = 2V_2 \qquad (3)$$

$$\frac{I_2}{I_1} = -\frac{1}{n} = -2 \longrightarrow I_1 = -0.5I_2 \qquad (4)$$

Substituting (3) and (4) into (1) and (2), we obtain

$$100 = (-4 - j2)I_2 + 2V_2 \qquad (1)a$$
$$0 = (10 + j4)I_2 + V_2 \qquad (2)a$$

Solving (1)a and (2)a leads to $\mathbf{I}_2$ = -3.5503 +j1.4793

$$I_x = I_1 + I_2 = 0.5I_2 = \underline{1.923\angle 157.4^o \text{ A}}$$

Chapter 13, Solution 49.

$$\omega = 2, \quad \frac{1}{20}\text{F} \longrightarrow \frac{1}{j\omega C} = -j10$$

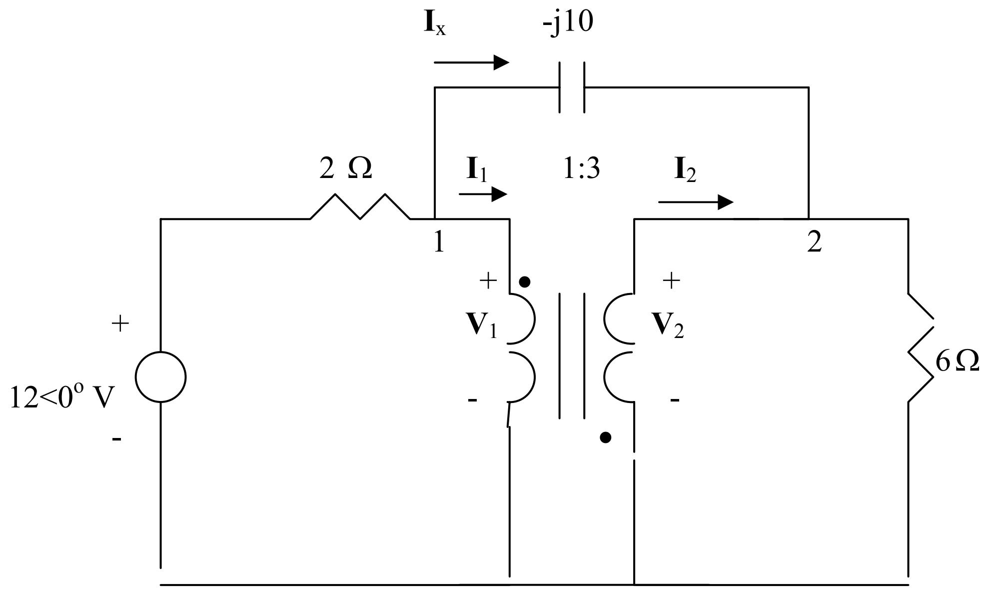

At node 1,

$$\frac{12 - V_1}{2} = \frac{V_1 - V_2}{-j10} + I_1 \quad \longrightarrow \quad 12 = 2I_1 + V_1(1 + j0.2) - j0.2V_2 \qquad (1)$$

At node 2,

$$I_2 + \frac{V_1 - V_2}{-j10} = \frac{V_2}{6} \quad \longrightarrow \quad 0 = 6I_2 + j0.6V_1 - (1 + j0.6)V_2 \qquad (2)$$

At the terminals of the transformer, $V_2 = -3V_1, \quad I_2 = -\frac{1}{3}I_1$

Substituting these in (1) and (2),

$$12 = -6I_2 + V_1(1 + j0.8), \qquad 0 = 6I_2 + V_1(3 + j2.4)$$

Adding these gives $\mathbf{V}_1$=1.829 –j1.463 and

$$I_x = \frac{V_1 - V_2}{-j10} = \frac{4V_1}{-j10} = 0.937\angle 51.34^o$$

$$\underline{i_x = 0.937\cos(2t + 51.34^o)\ \text{A}}$$

Chapter 13, Solution 50.

The value of Z_{in} is not effected by the location of the dots since n^2 is involved.

$Z_{in}' = (6 - j10)/(n')^2, \; n' = 1/4$

$Z_{in}' = 16(6 - j10) = 96 - j160$

$Z_{in} = 8 + j12 + (Z_{in}' + 24)/n^2, \quad n = 5$

$Z_{in} = 8 + j12 + (120 - j160)/25 = 8 + j12 + 4.8 - j6.4$

Z_{in} = **<u>(12.8 + j5.6) ohms</u>**

Chapter 13, Solution 51.

Let $Z_3 = 36 + j18$, where Z_3 is reflected to the middle circuit.

$Z_R' = Z_L/n^2 = (12 + j2)/4 = 3 + j0.5$

$Z_{in} = 5 - j2 + Z_R'$ = **<u>(8 – j1.5) ohms</u>**

$I_1 = 24\angle 0°/Z_{Th} = 24\angle 0°/(8 - j1.5) = 24\angle 0°/8.14\angle -10.62°$ = **<u>8.95∠10.62° A</u>**

Chapter 13, Solution 52.

For maximum power transfer,

$40 = Z_L/n^2 = 10/n^2$ or $n^2 = 10/40$ which yields $n = 1/2 = 0.5$

$I = 120/(40 + 40) = 3/2$

$p = I^2R = (9/4)x40 =$ **90 watts**.

Chapter 13, Solution 53.

(a) The Thevenin equivalent to the left of the transformer is shown below.

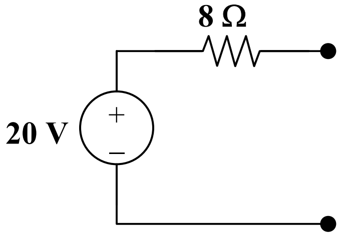

The reflected load impedance is $Z_L' = Z_L/n^2 = 200/n^2$.

For maximum power transfer, $8 = 200/n^2$ produces $n =$ **5**.

(b) If $n = 10$, $Z_L' = 200/10 = 2$ and $I = 20/(8 + 2) = 2$

$p = I^2Z_L' = (2)^2(2) =$ **8 watts**.

Chapter 13, Solution 54.

(a)

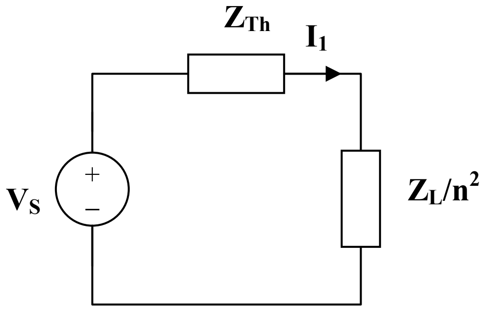

For maximum power transfer,

$$Z_{Th} = Z_L/n^2, \text{ or } n^2 = Z_L/Z_{Th} = 8/128$$

$$n = \underline{\mathbf{0.25}}$$

(b) $I_1 = V_{Th}/(Z_{Th} + Z_L/n^2) = 10/(128 + 128) = \underline{\mathbf{39.06\ mA}}$

(c) $v_2 = I_2Z_L = 156.24\text{x}8\text{ mV} = 1.25\text{ V}$

But $v_2 = nv_1$ therefore $v_1 = v_2/n = 4(1.25) = \underline{\mathbf{5\ V}}$

Chapter 13, Solution 55.

We reflect Z_s to the primary side.

$Z_R = (500 - j200)/n^2 = 5 - j2,\ Z_{in} = Z_p + Z_R = 3 + j4 + 5 - j2 = 8 + j2$

$I_1 = 120\angle 0°/(8 + j2) = 14.552\angle{-14.04°}$

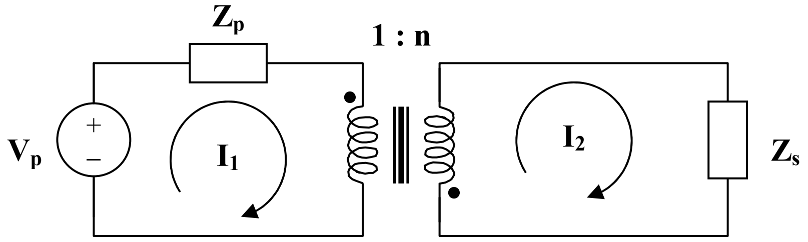

Since both currents enter the dotted terminals as shown above,

$I_2 = -(1/n)I_1 = -1.4552\angle{-14.04°} = 1.4552\angle 166°$

$S_2 = |I_2|^2Z_s = (1.4552)(500 - j200)$

$P_2 = \text{Re}(S_2) = (1.4552)^2(500) = \underline{\mathbf{1054\ watts}}$

Chapter 13, Solution 56.

We apply mesh analysis to the circuit as shown below.

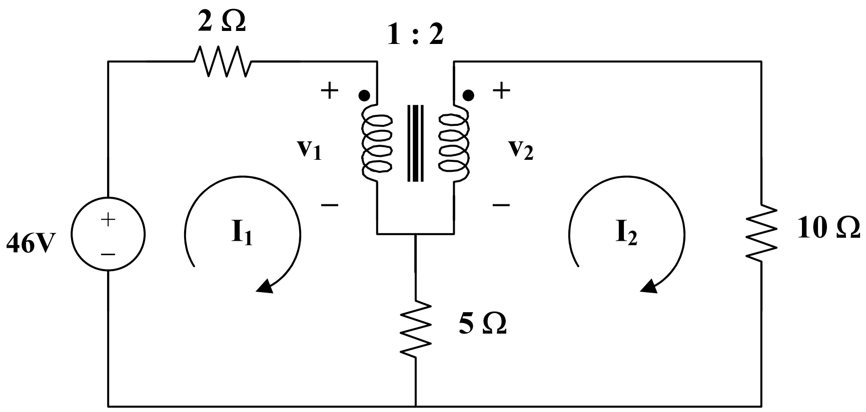

For mesh 1, $46 = 7I_1 - 5I_2 + v_1$ (1)

For mesh 2, $v_2 = 15I_2 - 5I_1$ (2)

At the terminals of the transformer,

$$v_2 = nv_1 = 2v_1 \quad (3)$$

$$I_1 = nI_2 = 2I_2 \quad (4)$$

Substituting (3) and (4) into (1) and (2),

$$46 = 9I_2 + v_1 \quad (5)$$

$$v_1 = 2.5I_2 \quad (6)$$

Combining (5) and (6), $46 = 11.5I_2$ or $I_2 = 4$

$P_{10} = 0.5I_2^2(10) =$ **80 watts**.

Chapter 13, Solution 57.

(a) $Z_L = j3||(12 - j6) = j3(12 - j6)/(12 - j3) = (12 + j54)/17$

Reflecting this to the primary side gives

$Z_{in} = 2 + Z_L/n^2 = 2 + (3 + j13.5)/17 = 2.3168\angle 20.04°$

$I_1 = v_s/Z_{in} = 60\angle 90°/2.3168\angle 20.04° = \underline{\mathbf{25.9\angle 69.96° \ A(rms)}}$

$I_2 = I_1/n = \underline{\mathbf{12.95\angle 69.96° \ A(rms)}}$

(b) $60\angle 90° = 2I_1 + v_1$ or $v_1 = j60 - 2I_1 = j60 - 51.8\angle 69.96°$

$v_1 = \underline{\mathbf{21.06\angle 147.44° \ V(rms)}}$

$v_2 = nv_1 = \underline{\mathbf{42.12\angle 147.44° \ V(rms)}}$

$v_o = v_2 = \underline{\mathbf{42.12\angle 147.44° \ V(rms)}}$

(c) $S = v_sI_1^* = (60\angle 90°)(25.9\angle -69.96°) = \underline{\mathbf{1554\angle 20.04° \ VA}}$

Chapter 13, Solution 58.

Consider the circuit below.

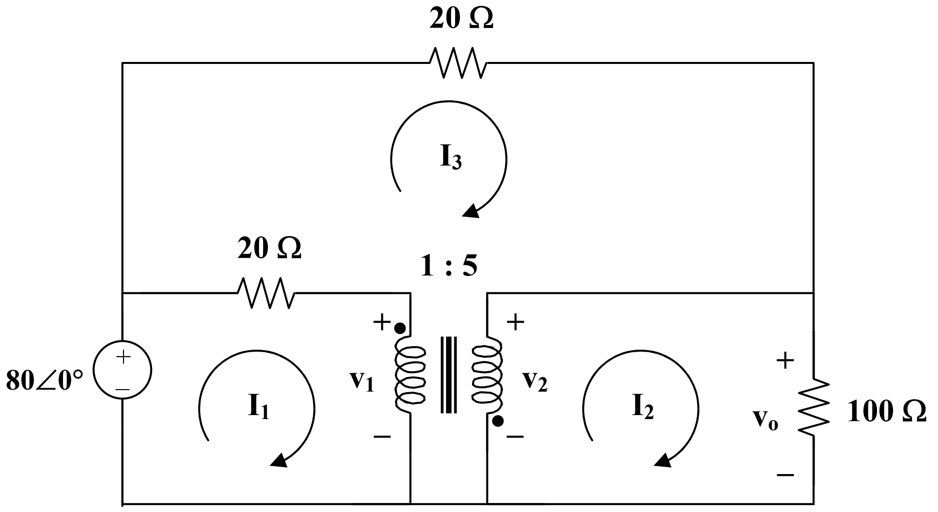

For mesh1, $80 = 20I_1 - 20I_3 + v_1$ (1)

For mesh 2, $v_2 = 100I_2$ (2)

For mesh 3, $0 = 40I_3 - 20I_1$ which leads to $I_1 = 2I_3$ (3)

At the transformer terminals, $v_2 = -nv_1 = -5v_1$ (4)

$$I_1 = -nI_2 = -5I_2 \quad (5)$$

From (2) and (4), $-5v_1 = 100I_2$ or $v_1 = -20I_2$ (6)

Substituting (3), (5), and (6) into (1),

$$4 = I_1 - I_2 - I_3 = I_1 - (I_1/(-5)) - I_1/2 = (7/10)I_1$$

$$I_1 = 40/7,\ I_2 = -8/7,\ I_3 = 20/7$$

p_{20}(the one between 1 and 3) $= 0.5(20)(I_1 - I_3)^2 = 10(20/7)^2 =$ **81.63 watts**

p_{20}(at the top of the circuit) $= 0.5(20)I_3^2 =$ **81.63 watts**

$p_{100} = 0.5(100)I_2^2 =$ **65.31 watts**

Chapter 13, Solution 59.

We apply nodal analysis to the circuit below.

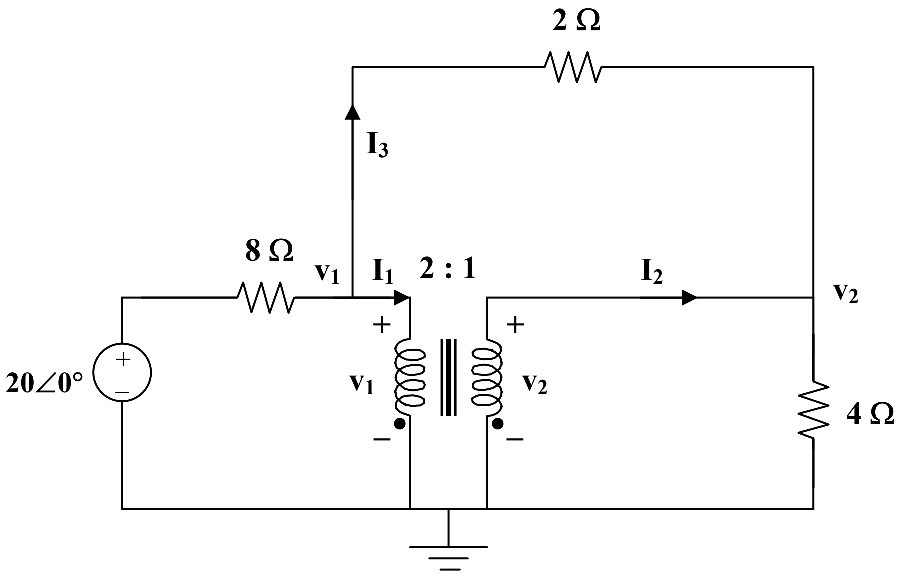

$$20 = 8I_1 + V_1 \qquad (1)$$

$$V_1 = 2I_3 + V_2 \qquad (2)$$

$$V_2 = 4I_2 \qquad (3)$$

At the transformer terminals, $\quad v_2 = 0.5v_1 \qquad (4)$

$$I_1 = 0.5I_2 \qquad (5)$$

Solving (1) to (5) gives $I_1 = 0.833$ A, $I_2 = 1.667$ A, $I_3 = 3.333$ A

$$V_1 = 13.33 \text{ V}, \; V_2 = 6.667 \text{ V}.$$

$P_{8\Omega} = 0.5(8)|(20 - V_1)/8|^2 =$ **<u>2.778 W</u>**

$P_{2\Omega} = 0.5(2)I_3^2 =$ **<u>11.11 W</u>**, $P_{4\Omega} = 0.5V_2^2/4 =$ **<u>5.556 W</u>**

Chapter 13, Solution 60.

(a) Transferring the 40-ohm load to the middle circuit,

$Z_L' = 40/(n')^2 = 10$ ohms where $n' = 2$

$10||(5 + 10) = 6$ ohms

We transfer this to the primary side.

$Z_{in} = 4 + 6/n^2 = 4 + 96 = 100$ ohms, where $n = 0.25$

$I_1 = 120/100 =$ **<u>1.2 A</u>** and $I_2 = I_1/n =$ **<u>4.8 A</u>**

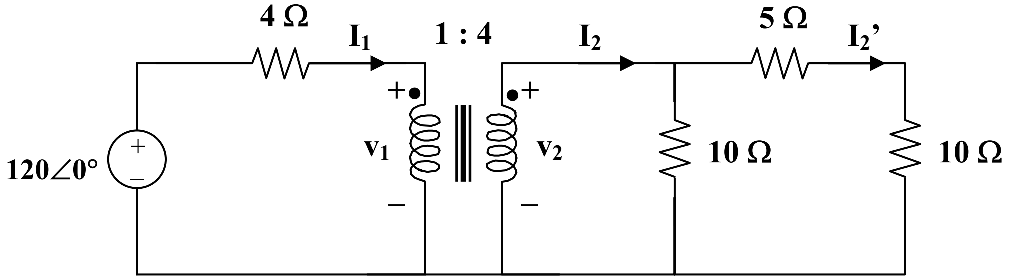

Using current division, $I_2' = (10/25)I_2 = 1.92$ and $I_3 = I_2'/n' =$ **<u>0.96 A</u>**

(b) $p = 0.5(I_3)^2(40) =$ **<u>18.432 watts</u>**

Chapter 13, Solution 61.

We reflect the 160-ohm load to the middle circuit.

$$Z_R = Z_L/n^2 = 160/(4/3)^2 = 90 \text{ ohms, where } n = 4/3$$

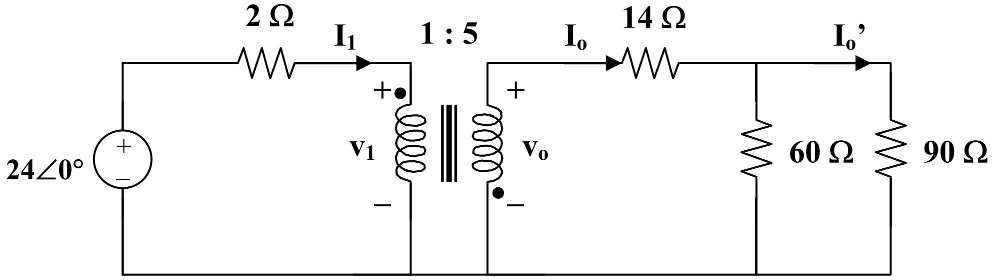

$$14 + 60||90 = 14 + 36 = 50 \text{ ohms}$$

We reflect this to the primary side.

$Z_R' = Z_L'/(n')^2 = 50/5^2 = 2$ ohms when $n' = 5$

$I_1 = 24/(2 + 2) =$ **<u>6A</u>**

$24 = 2I_1 + v_1$ or $v_1 = 24 - 2I_1 = 12$ V

$v_o = -nv_1 =$ **<u>–60 V</u>**, $I_o = -I_1/n_1 = -6/5 = -1.2$

$I_o' = [60/(60 + 90)]I_o = -0.48$A

$I_2 = -I_o'/n = 0.48/(4/3) =$ **<u>0.36 A</u>**

Chapter 13, Solution 62.

(a) Reflect the load to the middle circuit.

$Z_L' = 8 - j20 + (18 + j45)/3^2 = 10 - j15$

We now reflect this to the primary circuit so that

$Z_{in} = 6 + j4 + (10 - j15)/n^2 = 7.6 + j1.6 = 7.767\angle 11.89°$, where $n = 5/2 = 2.5$

$I_1 = 40/Z_{in} = 40/7.767\angle 11.89° = 5.15\angle -11.89°$

$S = 0.5v_sI_1^* = (20\angle 0°)(5.15\angle 11.89°) =$ **<u>103∠11.89° VA</u>**

(b) $I_2 = -I_1/n, \quad n = 2.5$

$I_3 = -I_2/n', \quad n = 3$

$I_3 = I_1/(nn') = 5.15\angle{-11.89°}/(2.5x3) = 0.6867\angle{-11.89°}$

$p = 0.5|I_2|^2(18) = 9(0.6867)^2 =$ **<u>4.244 watts</u>**

Chapter 13, Solution 63.

Reflecting the (9 + j18)-ohm load to the middle circuit gives,

$Z_{in}' = 7 - j6 + (9 + j18)/(n')^2 = 7 - j6 + 1 + j12 = 8 + j4$ when $n' = 3$

Reflecting this to the primary side,

$Z_{in} = 1 + Z_{in}'/n^2 = 1 + 2 - j = 3 - j$, where $n = 2$

$I_1 = 12\angle 0°/(3 - j) = 12/3.162\angle{-18.43°} =$ **<u>3.795∠18.43A</u>**

$I_2 = I_1/n =$ **<u>1.8975∠18.43° A</u>**

$I_3 = -I_2/n^2 =$ **<u>632.5∠161.57° mA</u>**

Chapter 13, Solution 64.

We find Z_{Th} at the terminals of Z by considering the circuit below.

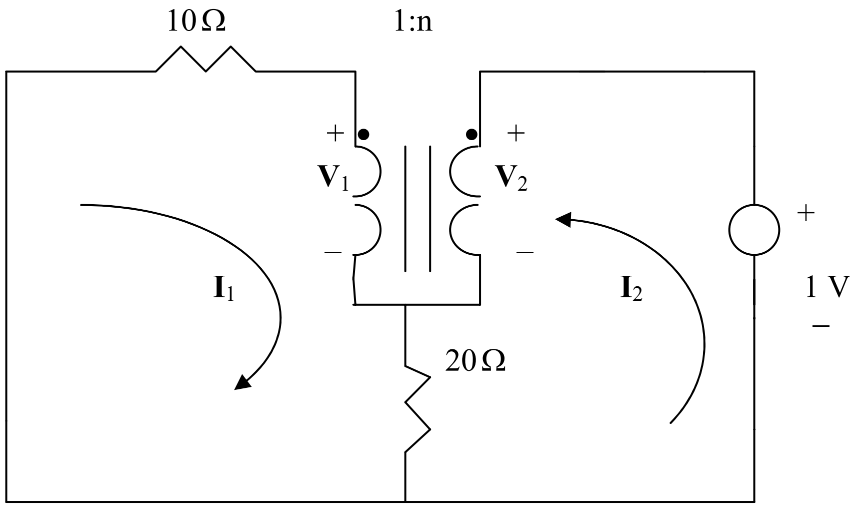

For mesh 1, $30I_1 + 20I_2 + V_1 = 0$ (1)

For mesh 2, $20I_1 + 20I_2 + V_2 = 1$ (2)

At the terminals, $V_2 = nV_1, \qquad I_2 = -\frac{I_1}{n}$

Substituting these in (1) and (2) leads to

$$(20 - 30n)I_2 + V_1 = 0, \qquad 20(1-n)I_2 + nV_1 = 1$$

Solving these gives

$$I_2 = \frac{1}{30n^2 - 40n + 20} \longrightarrow Z_{Th} = \frac{1}{I_2} = 30n^2 - 40n + 20 = 7.5$$

Solving the quadratic equation yields **n=0.5 or 0.8333**

Chapter 13, Solution 65.

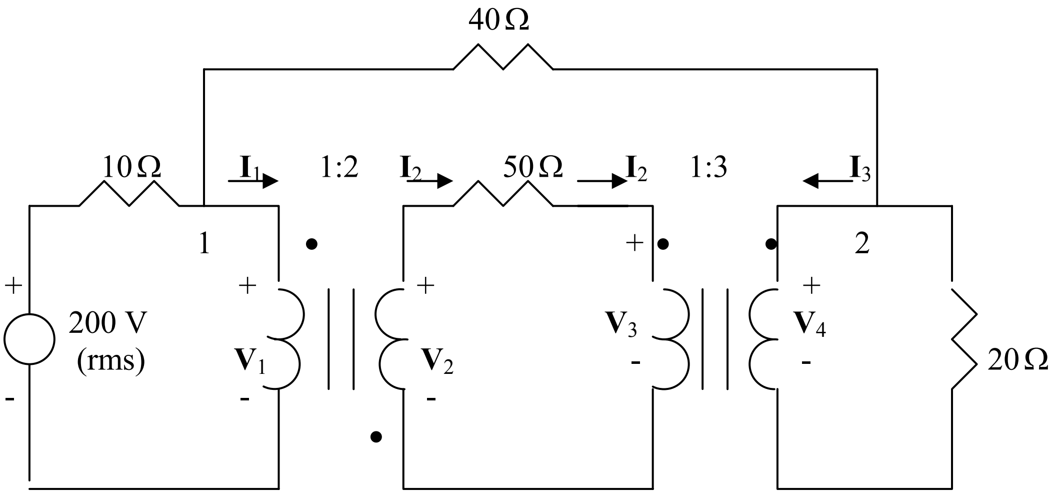

At node 1,

$$\frac{200 - V_1}{10} = \frac{V_1 - V_4}{40} + I_1 \longrightarrow 200 = 1.25V_1 - 0.25V_4 + 10I_1 \qquad (1)$$

At node 2,

$$\frac{V_1 - V_4}{40} = \frac{V_4}{20} + I_3 \quad \longrightarrow \quad V_1 = 3V_4 + 40I_3 \qquad (2)$$

At the terminals of the first transformer,

$$\frac{V_2}{V_1} = -2 \quad \longrightarrow \quad V_2 = -2V_1 \qquad (3)$$

$$\frac{I_2}{I_1} = -1/2 \quad \longrightarrow \quad I_1 = -2I_2 \qquad (4)$$

For the middle loop,

$$-V_2 + 50I_2 + V_3 = 0 \quad \longrightarrow \quad V_3 = V_2 - 50I_2 \qquad (5)$$

At the terminals of the second transformer,

$$\frac{V_4}{V_3} = 3 \quad \longrightarrow \quad V_4 = 3V_3 \qquad (6)$$

$$\frac{I_3}{I_2} = -1/3 \quad \longrightarrow \quad I_2 = -3I_3 \qquad (7)$$

We have seven equations and seven unknowns. Combining (1) and (2) leads to

$$200 = 3.5V_4 + 10I_1 + 50I_3$$

But from (4) and (7), $I_1 = -2I_2 = -2(-3I_3) = 6I_3$. Hence

$$200 = 3.5V_4 + 110I_3 \qquad (8)$$

From (5), (6), (3), and (7),

$$V_4 = 3(V_2 - 50I_2) = 3V_2 - 150I_2 = -6V_1 + 450I_3$$

Substituting for V_1 in (2) gives

$$V_4 = -6(3V_4 + 40I_3) + 450I_3 \quad \longrightarrow \quad I_3 = \frac{19}{210}V_4 \qquad (9)$$

Substituting (9) into (8) yields

$$200 = 13.452V_4 \quad \longrightarrow \quad V_4 = 14.87$$

$$P = \frac{V^2{}_4}{20} = \underline{11.05\text{ W}}$$

Chapter 13, Solution 66.

$$v_1 = 420\text{ V} \qquad (1)$$

$$v_2 = 120I_2 \qquad (2)$$

$$v_1/v_2 = 1/4 \text{ or } v_2 = 4v_1 \qquad (3)$$

$$I_1/I_2 = 4 \text{ or } I_1 = 4\ I_2 \qquad (4)$$

Combining (2) and (4),

$v_2 = 120[(1/4)I_1] = 30\ I_1$

$4v_1 = 30I_1$

$4(420) = 1680 = 30I_1$ or $I_1 =$ **<u>56 A</u>**

Chapter 13, Solution 67.

(a) $\dfrac{V_1}{V_2} = \dfrac{N_1 + N_2}{N_2} = \dfrac{1}{0.4} \quad \longrightarrow \quad V_2 = 0.4V_1 = 0.4x400 = \underline{160\text{ V}}$

(b) $S_2 = I_2V_2 = 5{,}000 \quad \longrightarrow \quad I_2 = \dfrac{5000}{160} = \underline{31.25\text{ A}}$

(c) $S_2 = S_1 = I_1V_1 = 5{,}000 \quad \longrightarrow \quad I_2 = \dfrac{5000}{400} = \underline{12.5\text{ A}}$

Chapter 13, Solution 68.

This is a step-up transformer.

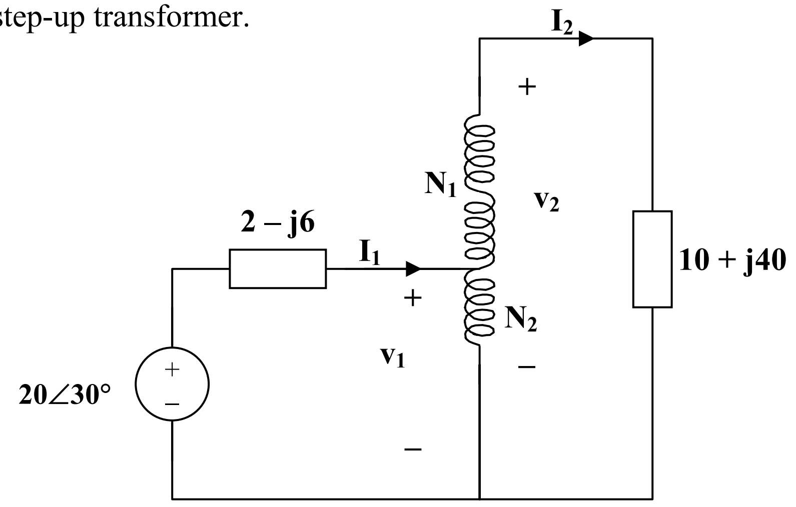

For the primary circuit, $\quad 20\angle 30° = (2 - j6)I_1 + v_1 \quad (1)$

For the secondary circuit, $\quad v_2 = (10 + j40)I_2 \quad (2)$

At the autotransformer terminals,

$$v_1/v_2 = N_1/(N_1 + N_2) = 200/280 = 5/7,$$

$$\text{thus } v_2 = 7v_1/5 \quad (3)$$

Also, $\quad I_1/I_2 = 7/5 \text{ or } I_2 = 5I_1/7 \quad (4)$

Substituting (3) and (4) into (2), $\quad v_1 = (10 + j40)25I_1/49$

Substituting that into (1) gives $\quad 20\angle 30° = (7.102 + j14.408)I_1$

$I_1 = 20\angle 30°/16.063\angle 63.76° =$ **$\underline{1.245\angle{-33.76°}\text{ A}}$**

$I_2 = 5I_1/7 =$ **$\underline{0.8893\angle{-33.76°}\text{ A}}$**

$I_o = I_1 - I_2 = [(5/7) - 1]I_1 = -2I_1/7 =$ **$\underline{0.3557\angle 146.2°\text{ A}}$**

$p = |I_2|^2R = (0.8893)^2(10) =$ **$\underline{7.51\text{ watts}}$**

Chapter 13, Solution 69.

We can find the Thevenin equivalent.

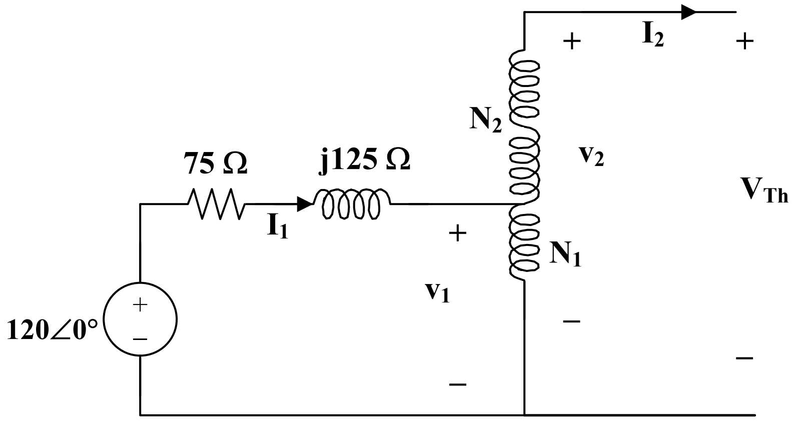

$$I_1 = I_2 = 0$$

As a step up transformer, $v_1/v_2 = N_1/(N_1 + N_2) = 600/800 = 3/4$

$$v_2 = 4v_1/3 = 4(120)/3 = 160\angle 0° \text{ rms} = V_{Th}.$$

To find Z_{Th}, connect a 1-V source at the secondary terminals. We now have a step-down transformer.

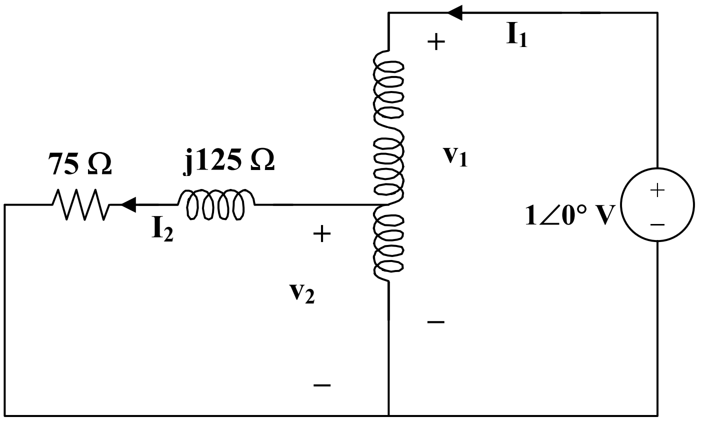

$$v_1 = 1\text{V}, \ v_2 = I_2(75 + j125)$$

But $v_1/v_2 = (N_1 + N_2)/N_1 = 800/200$ which leads to $v_1 = 4v_2 = 1$

and $v_2 = 0.25$

$I_1/I_2 = 200/800 = 1/4$ which leads to $I_2 = 4I_1$

Hence $\quad 0.25 = 4I_1(75 + j125)$ or $I_1 = 1/[16(75 + j125)$

$Z_{Th} = 1/I_1 = 16(75 + j125)$

Therefore, $Z_L = Z_{Th}^* =$ **$(1.2 - j2)$ kΩ**

Since V_{Th} is rms, $p = (|V_{Th}|/2)^2/R_L = (80)^2/1200 =$ **5.333 watts**

Chapter 13, Solution 70.

This is a step-down transformer.

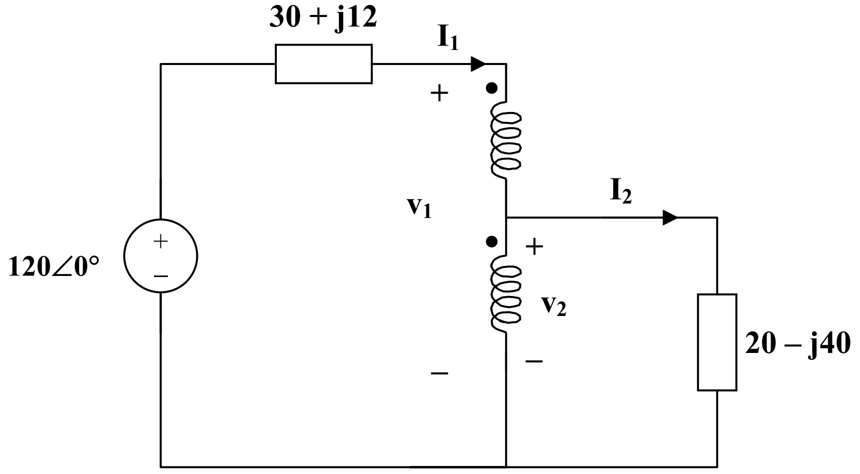

$I_1/I_2 = N_2/(N_1 + N_2) = 200/1200 = 1/6$, or $I_1 = I_2/6 \quad (1)$

$v_1/v_2 = (N_2 + N_2)/N_2 = 6$, or $v_1 = 6v_2 \quad (2)$

For the primary loop, $\quad 120 = (30 + j12)I_1 + v_1 \quad (3)$

For the secondary loop, $\quad v_2 = (20 - j40)I_2 \quad (4)$

Substituting (1) and (2) into (3),

$120 = (30 + j12)(I_2/6) + 6v_2$

and substituting (4) into this yields

$120 = (49 - j38)I_2$ or $I_2 = 1.935\angle 37.79°$

$p = |I_2|^2(20) =$ **74.9 watts**.

Chapter 13, Solution 71.

$Z_{in} = V_1/I_1$

But $V_1I_1 = V_2I_2$, or $V_2 = I_2Z_L$ and $I_1/I_2 = N_2/(N_1 + N_2)$

Hence $V_1 = V_2I_2/I_1 = Z_L(I_2/I_1)I_2 = Z_L(I_2/I_1)^2I_1$

$V_1/I_1 = Z_L[(N_1 + N_2)/N_2]^2$

$Z_{in} = \underline{\mathbf{[1 + (N_1/N_2)]^2Z_L}}$

Chapter 13, Solution 72.

(a) Consider just one phase at a time.

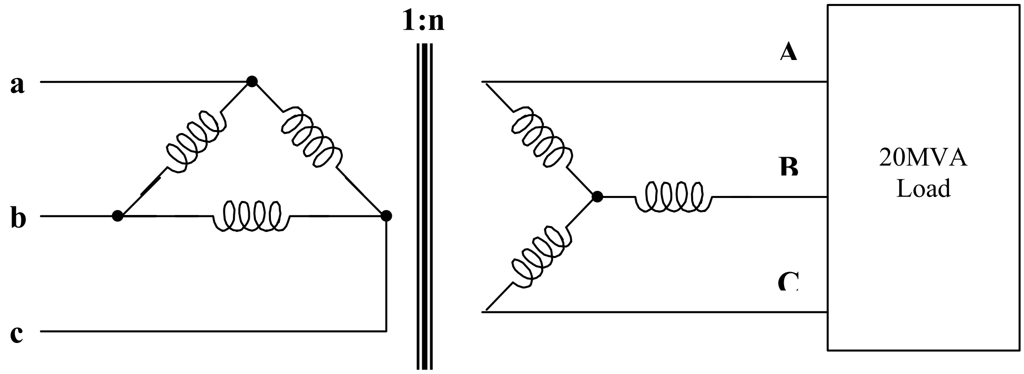

$n = V_L/\sqrt{3}V_{Lp} = 7200/(12470\sqrt{3}) = \underline{\mathbf{1/3}}$

(b) The load carried by each transformer is 60/3 = 20 MVA.

Hence $I_{Lp} = 20 \text{ MVA}/12.47 \text{ k} = \underline{\mathbf{1604 \text{ A}}}$

$I_{Ls} = 20 \text{ MVA}/7.2 \text{ k} = \underline{\mathbf{2778 \text{ A}}}$

(c) The current in incoming line a, b, c is

$\sqrt{3}I_{Lp} = \sqrt{3}\text{x}1603.85 = \underline{\mathbf{2778 \text{ A}}}$

Current in each outgoing line A, B, C is

$2778/(n\sqrt{3}) = \underline{\mathbf{4812 \text{ A}}}$

Chapter 13, Solution 73.

(a) This is a **three-phase Δ-Y transformer**.

(b) $V_{Ls} = nv_{Lp}/\sqrt{3} = 450/(3\sqrt{3}) = 86.6$ V, where n = 1/3

As a Y-Y system, we can use per phase equivalent circuit.

$I_a = V_{an}/Z_Y = 86.6\angle 0°/(8 - j6) = 8.66\angle 36.87°$

$I_c = I_a\angle 120° =$ **$8.66\angle 156.87°$ A**

$I_{Lp} = n\sqrt{3}\, I_{Ls}$

$I_1 = (1/3)\sqrt{3}(8.66\angle 36.87°) = 5\angle 36.87°$

$I_2 = I_1\angle -120° =$ **$5\angle -83.13°$ A**

(c) $p = 3|I_a|^2(8) = 3(8.66)^2(8) =$ **1.8 kw**.

Chapter 13, Solution 74.

(a) This is a **Δ-Δ connection**.

(b) The easy way is to consider just one phase.

$1:n = 4:1$ or $n = 1/4$

$n = V_2/V_1$ which leads to $V_2 = nV_1 = 0.25(2400) = 600$

i.e. $V_{Lp} = 2400$ V and $V_{Ls} = 600$ V

$S = p/\cos\theta = 120/0.8$ kVA $= 150$ kVA

$p_L = p/3 = 120/3 = 40$ kw

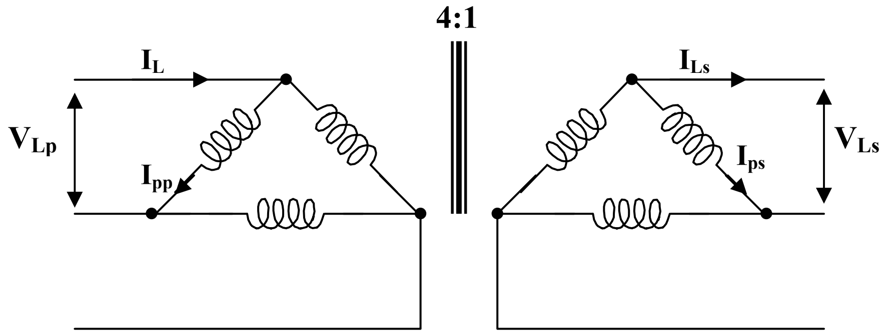

But $p_{Ls} = V_{ps}I_{ps}$

For the Δ-load, $I_L = \sqrt{3}\, I_p$ and $V_L = V_p$

Hence, $I_{ps} = 40{,}000/600 = 66.67$ A

$$I_{Ls} = \sqrt{3}\, I_{ps} = \sqrt{3}\,x66.67 = \underline{\mathbf{115.48\ A}}$$

(c) Similarly, for the primary side

$$p_{pp} = V_{pp}I_{pp} = p_{ps} \text{ or } I_{pp} = 40{,}000/2400 = \underline{\mathbf{16.667\ A}}$$

$$\text{and} \quad I_{Lp} = \sqrt{3}\, I_p = \underline{\mathbf{28.87\ A}}$$

(d) Since $S = 150$ kVA therefore $S_p = S/3 = \underline{\mathbf{50\ kVA}}$

Chapter 13, Solution 75.

(a) $n = V_{Ls}/(\sqrt{3}\, V_{Lp})\ \ 4500/(900\sqrt{3}) = \underline{\mathbf{2.887}}$

(b) $S = \sqrt{3}\, V_{Ls}I_{Ls}$ or $I_{Ls} = 120{,}000/(900\sqrt{3}) = \underline{\mathbf{76.98\ A}}$

$$I_{Ls} = I_{Lp}/(n\sqrt{3}) = 76.98/(2.887\sqrt{3}) = \underline{\mathbf{15.395\ A}}$$

Chapter 13, Solution 76.

(a) At the load, $V_L = 240\ V = V_{AB}$

$$V_{AN} = V_L/\sqrt{3} = 138.56\ V$$

Since $S = \sqrt{3}\, V_LI_L$ then $I_L = 60{,}000/(240\sqrt{3}) = \underline{\mathbf{144.34\ A}}$

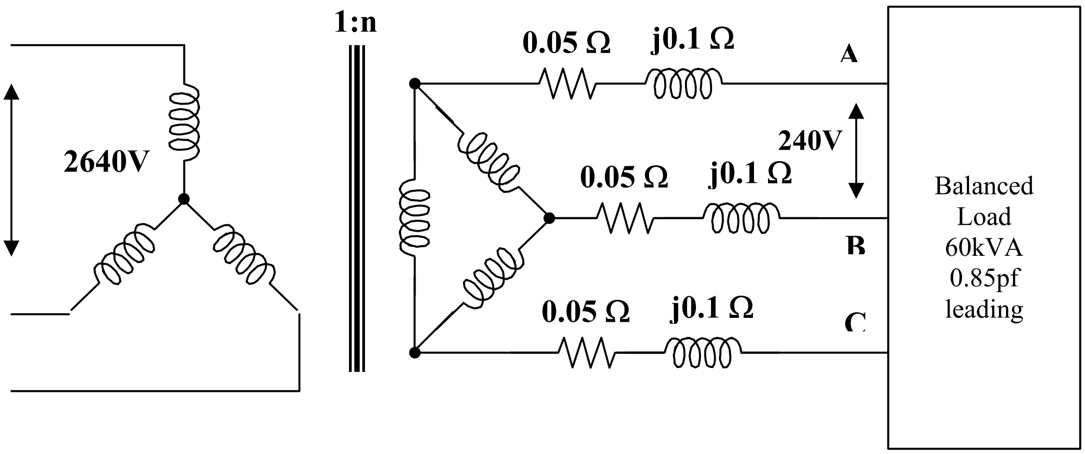

(b) Let $V_{AN} = |V_{AN}|\angle 0° = 138.56\angle 0°$

$\cos\theta = pf = 0.85$ or $\theta = 31.79°$

$I_{AA'} = I_L\angle\theta = 144.34\angle 31.79°$

$V_{A'N'} = ZI_{AA'} + V_{AN}$

$= 138.56\angle 0° + (0.05 + j0.1)(144.34\angle 31.79°)$

$= 138.03\angle 6.69°$

$V_{Ls} = V_{A'N'}\sqrt{3} = 137.8\sqrt{3} = \underline{\mathbf{238.7\ V}}$

(c) For Y-Δ connections,

$n = \sqrt{3}\,V_{Ls}/V_{ps} = \sqrt{3}\,x238.7/2640 = 0.1569$

$f_{Lp} = nI_{Ls}/\sqrt{3} = 0.1569x144.34/\sqrt{3} = \underline{\mathbf{13.05\ A}}$

Chapter 13, Solution 77.

(a) This is a single phase transformer. $V_1 = 13.2$ kV, $V_2 = 120$ V

$n = V_2/V_1 = 120/13{,}200 = 1/110$, therefore $n = \underline{\mathbf{110}}$

(b) $P = VI$ or $I = P/V = 100/120 = 0.8333$ A

$I_1 = nI_2 = 0.8333/110 = \underline{\mathbf{7.576\ mA}}$

Chapter 13, Solution 78.

The schematic is shown below.

$$k = M/\sqrt{L_1 L_2} = 1/\sqrt{6x3} = 0.2357$$

In the AC Sweep box, set Total Pts = 1, Start Freq = 0.1592 and End Freq = 0.1592. After simulation, the output file includes

FREQ	IM(V_PRINT1)	IP(V_PRINT1)
1.592 E–01	4.253 E+00	–8.526 E+00
FREQ	IM(V_PRINT2)	IP(V_PRINT2)
1.592 E–01	1.564 E+00	2.749 E+01

From this, I_1 = **$4.253\angle{-8.53^\circ}$ A**, I_2 = **$1.564\angle{27.49^\circ}$ A**

The power absorbed by the 4-ohm resistor $= 0.5|I|^2R = 0.5(1.564)^2x4$

$=$ **4.892 watts**

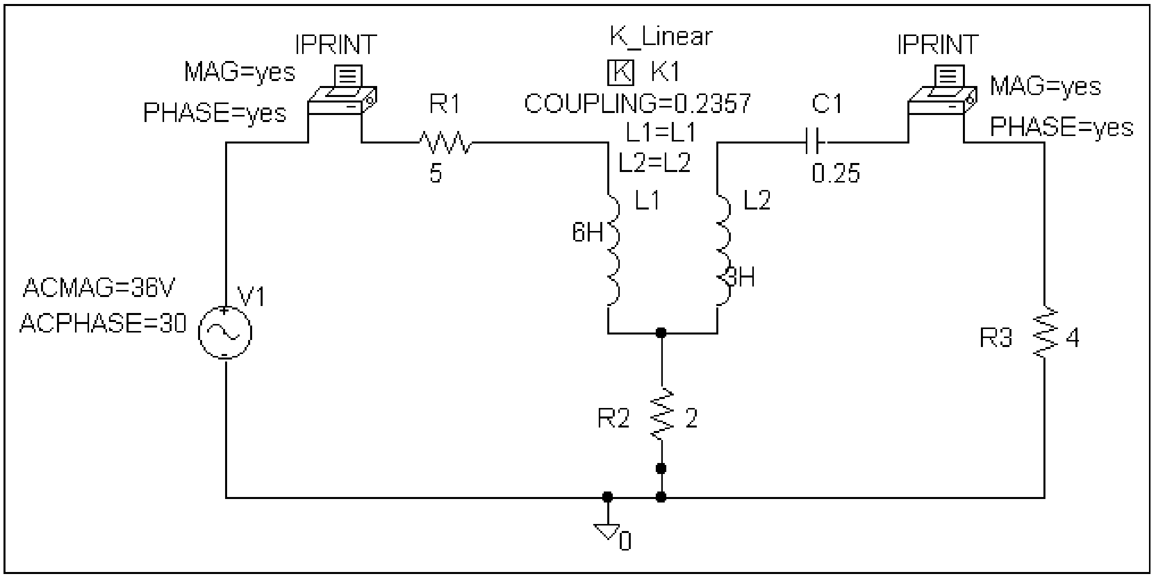

Chapter 13, Solution 79.

The schematic is shown below.

$$k_1 = 15/\sqrt{5000} = 0.2121, \ k_2 = 10/\sqrt{8000} = 0.1118$$

In the AC Sweep box, we type Total Pts = 1, Start Freq = 0.1592, and End Freq = 0.1592. After the circuit is saved and simulated, the output includes

FREQ	IM(V_PRINT1)	IP(V_PRINT1)
1.592 E–01	4.068 E–01	–7.786 E+01
FREQ	IM(V_PRINT2)	IP(V_PRINT2)
1.592 E–01	1.306 E+00	–6.801 E+01
FREQ	IM(V_PRINT3)	IP(V_PRINT3)
1.592 E–01	1.336 E+00	–5.492 E+01

Thus, I_1 = **$1.306\angle{-68.01°}$ A**, I_2 = **$406.8\angle{-77.86°}$ mA**, I_3 = **$1.336\angle{-54.92°}$ A**

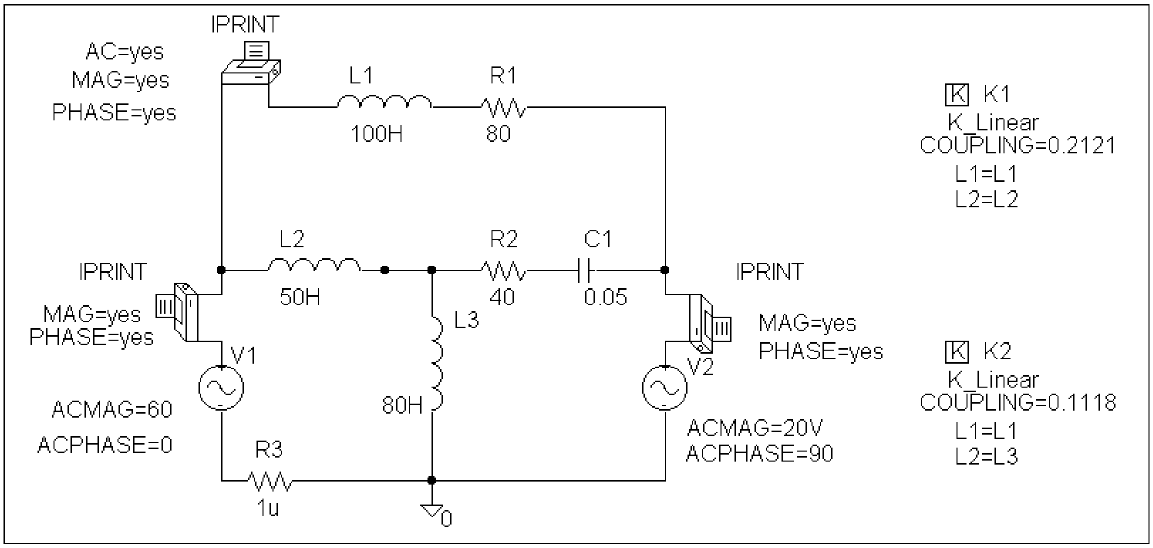

Chapter 13, Solution 80.

The schematic is shown below.

$$k_1 = 10/\sqrt{40x80} = 0.1768, \; k_2 = 20/\sqrt{40x60} = 0.482$$

$$k_3 = 30/\sqrt{80x60} = 0.433$$

In the AC Sweep box, we set Total Pts = 1, Start Freq = 0.1592, and End Freq = 0.1592. After the simulation, we obtain the output file which includes

FREQ	IM(V_PRINT1)	IP(V_PRINT1)
1.592 E–01	1.304 E+00	6.292 E+01

i.e. I_o = **$1.304\angle 62.92°$ A**

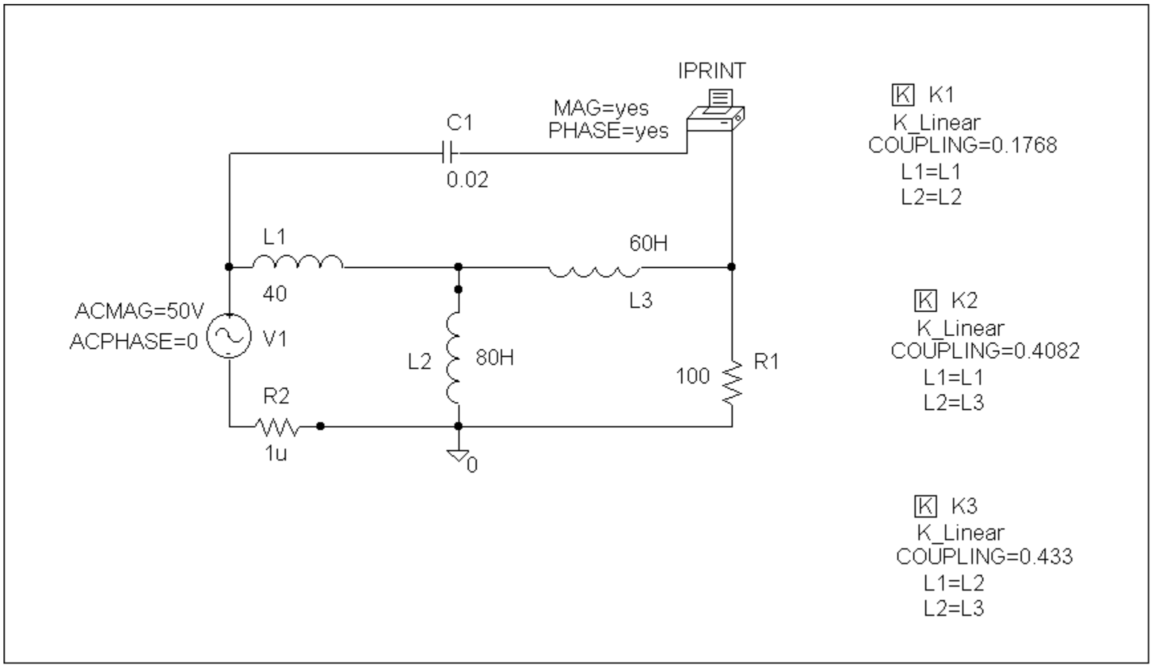

Chapter 13, Solution 81.

The schematic is shown below.

$$k_1 = 2/\sqrt{4x8} = 0.3535, \; k_2 = 1/\sqrt{2x8} = 0.25$$

In the AC Sweep box, we let Total Pts = 1, Start Freq = 100, and End Freq = 100. After simulation, the output file includes

FREQ	IM(V_PRINT1)	IP(V_PRINT1)
1.000 E+02	1.0448 E–01	1.396 E+01

FREQ	IM(V_PRINT2)	IP(V_PRINT2)
1.000 E+02	2.954 E–02	–1.438 E+02

FREQ	IM(V_PRINT3)	IP(V_PRINT3)
1.000 E+02	2.088 E–01	2.440 E+01

i.e. I_1 = **104.5∠13.96° mA**, I_2 = **29.54∠–143.8° mA**,

I_3 = **208.8∠24.4° mA**.

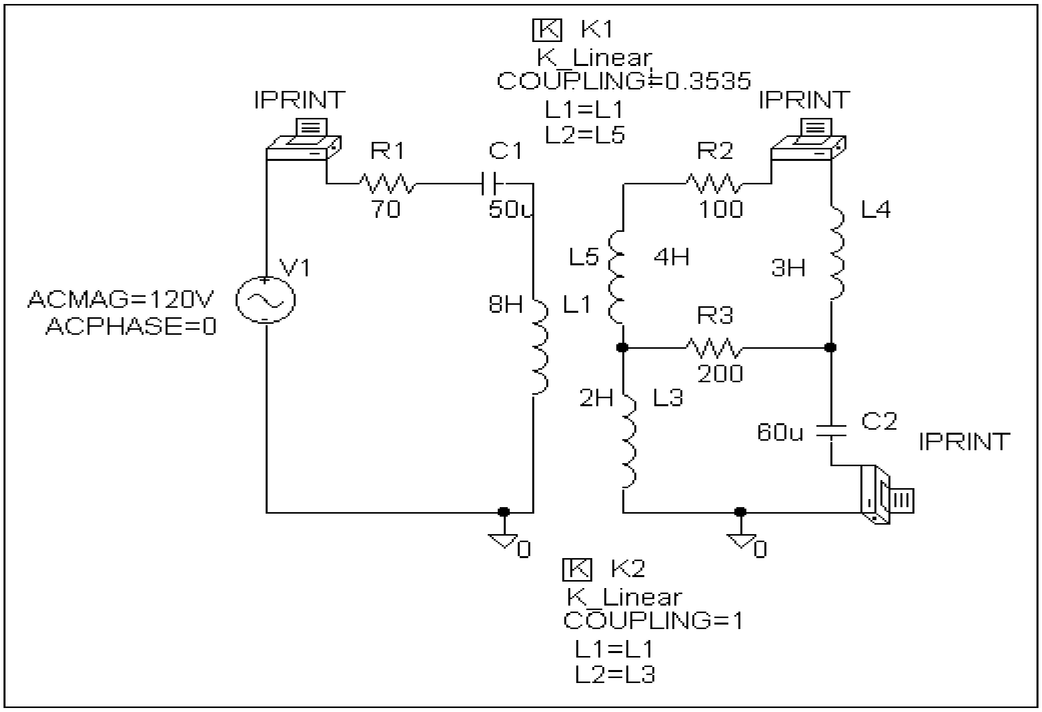

Chapter 13, Solution 82.

The schematic is shown below. In the AC Sweep box, we type Total Pts = 1, Start Freq = 0.1592, and End Freq = 0.1592. After simulation, we obtain the output file which includes

FREQ	IM(V_PRINT1)	IP(V_PRINT1)
1.592 E–01	1.955 E+01	8.332 E+01

FREQ	IM(V_PRINT2)	IP(V_PRINT2)
1.592 E–01	6.847 E+01	4.640 E+01

FREQ	IM(V_PRINT3)	IP(V_PRINT3)
1.592 E–01	4.434 E–01	–9.260 E+01

i.e. V_1 = **<u>19.55∠83.32° V</u>**, V_2 = **<u>68.47∠46.4° V</u>**,

I_o = **<u>443.4∠–92.6° mA</u>**.

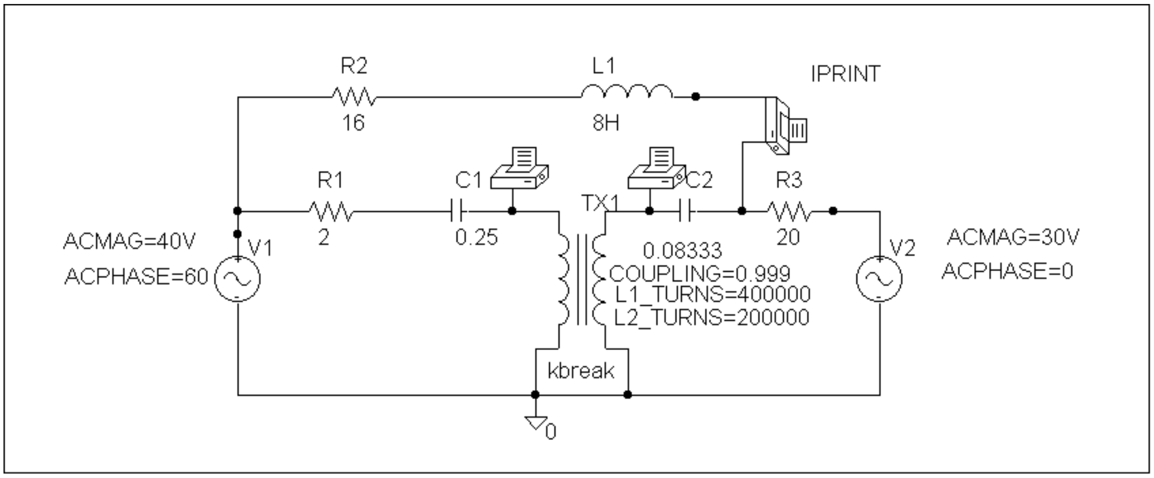

Chapter 13, Solution 83.

The schematic is shown below. In the AC Sweep box, we set Total Pts = 1, Start Freq = 0.1592, and End Freq = 0.1592. After simulation, the output file includes

FREQ	IM(V_PRINT1)	IP(V_PRINT1)
1.592 E–01	1.080 E+00	3.391 E+01

FREQ	VM($N_0001)	VP($N_0001)
1.592 E–01	1.514 E+01	–3.421 E+01

i.e. i_X = **<u>1.08∠33.91° A</u>**, V_x = **<u>15.14∠–34.21° V</u>**.

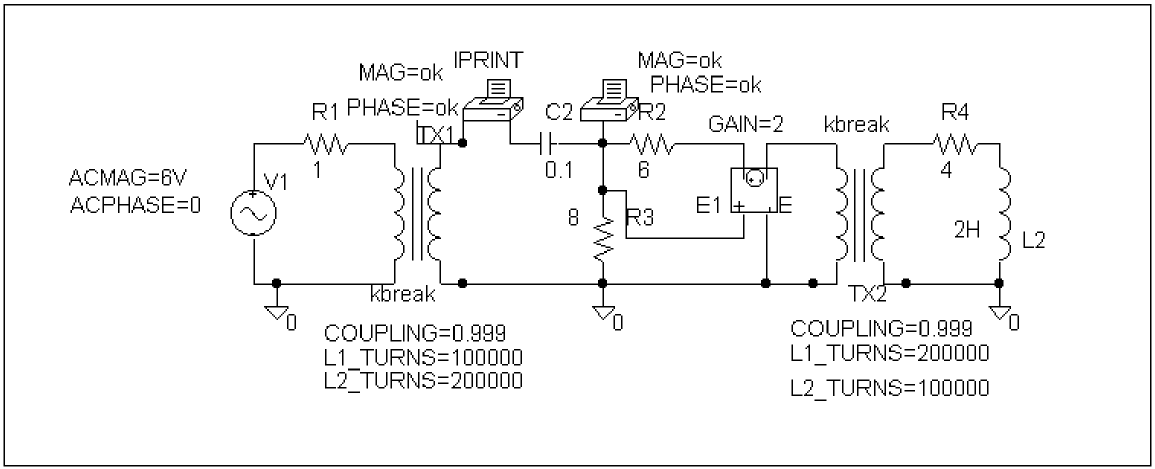

Chapter 13, Solution 84.

The schematic is shown below. We set Total Pts = 1, Start Freq = 0.1592, and End Freq = 0.1592. After simulation, the output file includes

FREQ	IM(V_PRINT1)	IP(V_PRINT1)
1.592 E–01	4.028 E+00	–5.238 E+01

FREQ	IM(V_PRINT2)	IP(V_PRINT2)
1.592 E–01	2.019 E+00	–5.211 E+01

FREQ	IM(V_PRINT3)	IP(V_PRINT3)
1.592 E–01	1.338 E+00	–5.220 E+01

i.e. $I_1 = \underline{\mathbf{4.028\angle{-52.38^\circ}\ A}}$, $I_2 = \underline{\mathbf{2.019\angle{-52.11^\circ}\ A}}$,

$I_3 = \underline{\mathbf{1.338\angle{-52.2^\circ}\ A}}$.

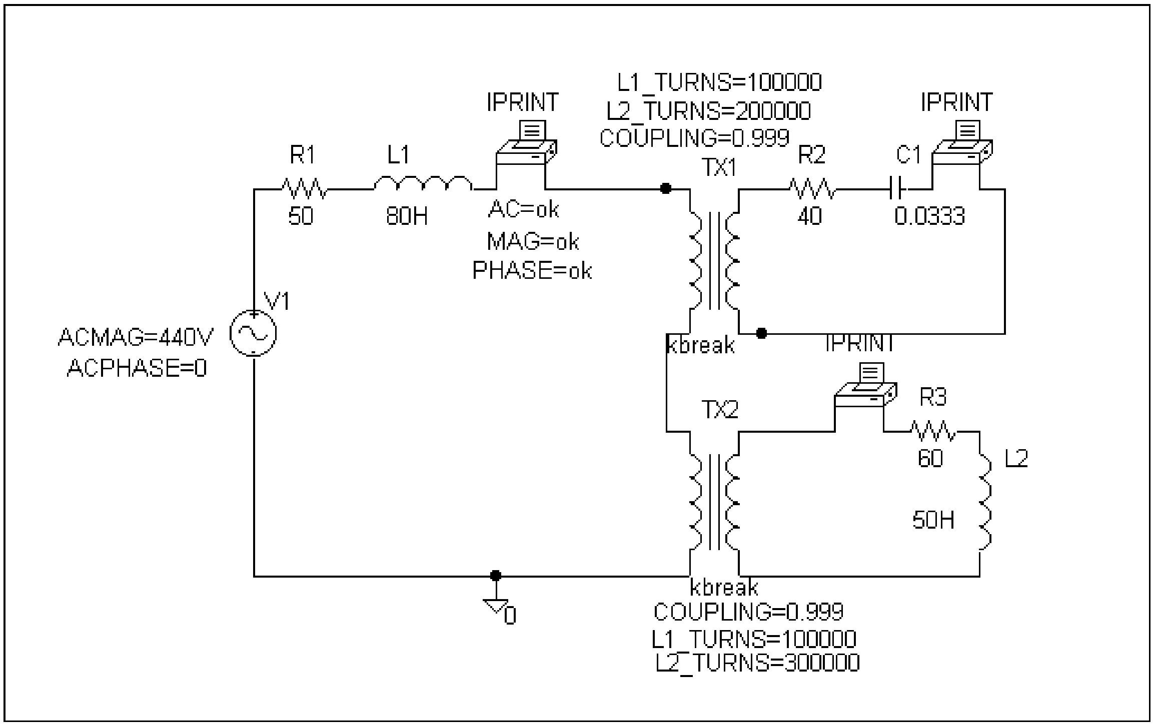

Chapter 13, Solution 85.

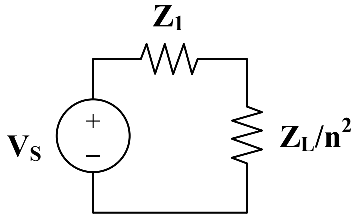

For maximum power transfer,

$$Z_1 = Z_L/n^2 \text{ or } n^2 = Z_L/Z_1 = 8/7200 = 1/900$$

$n = 1/30 = N_2/N_1$. Thus $N_2 = N_1/30 = 3000/30 =$ **<u>100 turns</u>**.

Chapter 13, Solution 86.

$n = N_2/N_1 = 48/2400 = 1/50$

$Z_{Th} = Z_L/n^2 = 3/(1/50)^2 =$ **<u>7.5 kΩ</u>**

Chapter 13, Solution 87.

$Z_{Th} = Z_L/n^2$ or $n = \sqrt{Z_L / Z_{Th}} = \sqrt{75/300} = \underline{\mathbf{0.5}}$

Chapter 13, Solution 88.

$n = V_2/V_1 = I_1/I_2$ or $I_2 = I_1/n = 2.5/0.1 = 25$ A

$p = IV = 25x12.6 =$ **<u>315 watts</u>**

Chapter 13, Solution 89.

$n = V_2/V_1 = 120/240 = 0.5$

$S = I_1V_1$ or $I_1 = S/V_1 = 10x10^3/240 = 41.67$ A

$S = I_2V_2$ or $I_2 = S/V_2 = 10^4/120 = 83.33$ A

Chapter 13, Solution 90.

(a) $n = V_2/V_1 = 240/2400 =$ **<u>0.1</u>**

(b) $n = N_2/N_1$ or $N_2 = nN_1 = 0.1(250) =$ **<u>25 turns</u>**

(c) $S = I_1V_1$ or $I_1 = S/V_1 = 4x10^3/2400 =$ **<u>1.6667 A</u>**

$S = I_2V_2$ or $I_2 = S/V_2 = 4x10^4/240 =$ **<u>16.667 A</u>**

Chapter 13, Solution 91.

(a) The kVA rating is $S = VI = 25,000x75 =$ **<u>1875 kVA</u>**

(b) Since $S_1 = S_2 = V_2I_2$ and $I_2 = 1875x10^3/240 =$ **<u>7812 A</u>**

Chapter 13, Solution 92.

(a) $V_2/V_1 = N_2/N_1 = n$, $V_2 = (N_2/N_1)V_1 = (28/1200)4800 =$ **<u>112 V</u>**

(b) $I_2 = V_2/R = 112/10 =$ **<u>11.2 A</u>** and $I_1 = nI_2$, $n = 28/1200$

$I_1 = (28/1200)11.2 =$ **<u>261.3 mA</u>**

(c) $p = |I_2|^2R = (11.2)^2(10) =$ **<u>1254 watts</u>**.

Chapter 13, Solution 93.

(a) For an input of 110 V, the primary winding must be connected in parallel, with series-aiding on the secondary. The coils must be series-opposing to give 12 V. Thus the connections are shown below.

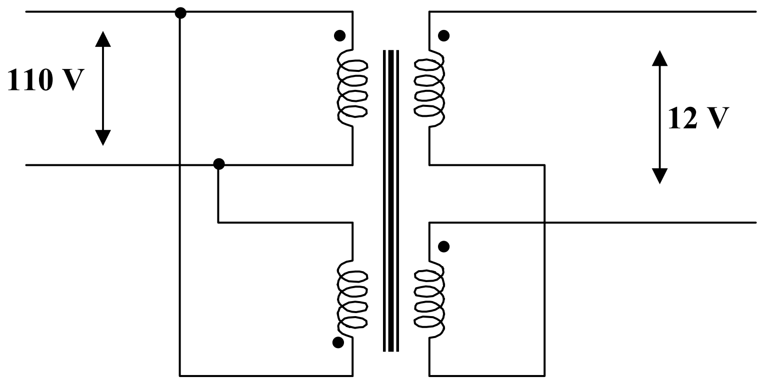

(b) To get 220 V on the primary side, the coils are connected in series, with series-aiding on the secondary side. The coils must be connected series-aiding to give 50 V. Thus, the connections are shown below.

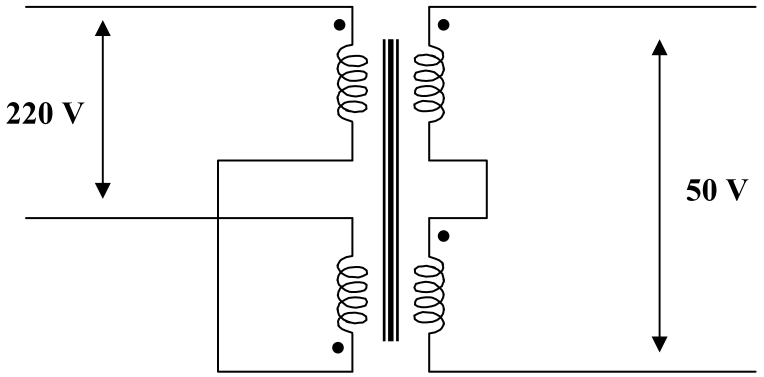

Chapter 13, Solution 94.

$V_2/V_1 = 110/440 = 1/4 = I_1/I_2$

There are four ways of hooking up the transformer as an auto-transformer. However it is clear that there are only two outcomes.

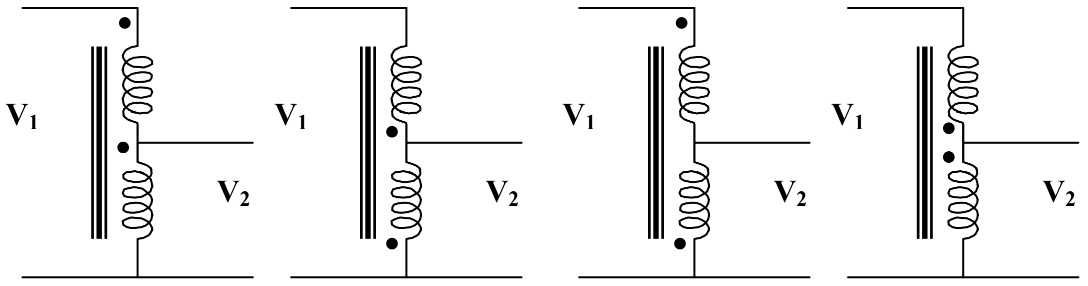

(1) (2) (3) (4)

(1) and (2) produce the same results and (3) and (4) also produce the same results. Therefore, we will only consider Figure (1) and (3).

(a) For Figure (3), $V_1/V_2 = 550/V_2 = (440 - 110)/440 = 330/440$

Thus, $V_2 = 550\text{x}440/330 =$ **733.4 V (not the desired result)**

(b) For Figure (1), $V_1/V_2 = 550/V_2 = (440 + 110)/440 = 550/440$

Thus, $V_2 = 550\text{x}440/550 =$ **440 V (the desired result)**

Chapter 13, Solution 95.

(a) $n = V_s/V_p = 120/7200 =$ **1/60**

(b) $I_s = 10\text{x}120/144 = 1200/144$

$$S = V_pI_p = V_sI_s$$

$$I_p = V_sI_s/V_p = (1/60)\text{x}1200/144 = \textbf{139 mA}$$

Chapter 14, Solution 1.

$$\mathbf{H}(\omega) = \frac{\mathbf{V}_o}{\mathbf{V}_i} = \frac{R}{R + 1/j\omega C} = \frac{j\omega RC}{1 + j\omega RC}$$

$$\mathbf{H}(\omega) = \frac{\mathbf{j\omega/\omega_0}}{\mathbf{1 + j\omega/\omega_0}}, \qquad \text{where } \boldsymbol{\omega_0} = \frac{\mathbf{1}}{\mathbf{RC}}$$

$$H = |\mathbf{H}(\omega)| = \frac{\omega/\omega_0}{\sqrt{1 + (\omega/\omega_0)^2}} \qquad \phi = \angle\mathbf{H}(\omega) = \frac{\pi}{2} - \tan^{-1}\left(\frac{\omega}{\omega_0}\right)$$

This is a highpass filter. The frequency response is the same as that for P.P.14.1 except that $\omega_0 = 1/RC$. Thus, the sketches of H and ϕ are shown below.

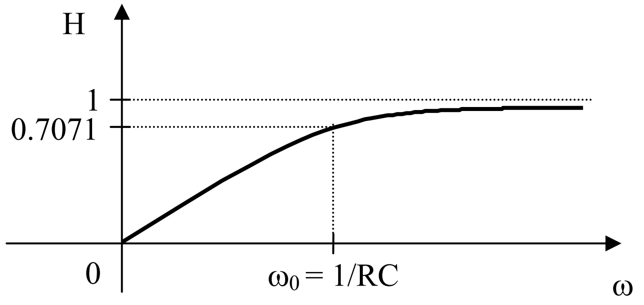

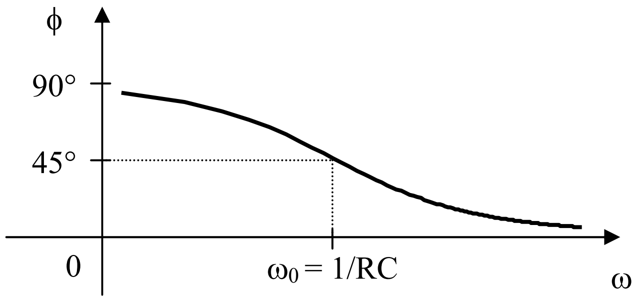

Chapter 14, Solution 2.

$$\mathbf{H}(\omega) = \frac{R}{R + j\omega L} = \frac{1}{1 + j\omega L/R} = \underline{\frac{\mathbf{1}}{\mathbf{1} + \mathbf{j}\boldsymbol{\omega}/\boldsymbol{\omega}_{\mathbf{0}}}}, \qquad \text{where } \underline{\boldsymbol{\omega}_{\mathbf{0}} = \frac{\mathbf{R}}{\mathbf{L}}}$$

$$H = |\mathbf{H}(\omega)| = \frac{1}{\sqrt{1 + (\omega/\omega_0)^2}} \qquad \phi = \angle\mathbf{H}(\omega) = -\tan^{-1}\left(\frac{\omega}{\omega_0}\right)$$

The frequency response is identical to the response in Example 14.1 except that $\omega_0 = R/L$. Hence the response is shown below.

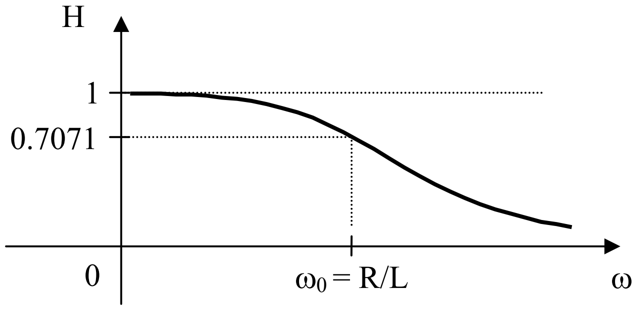

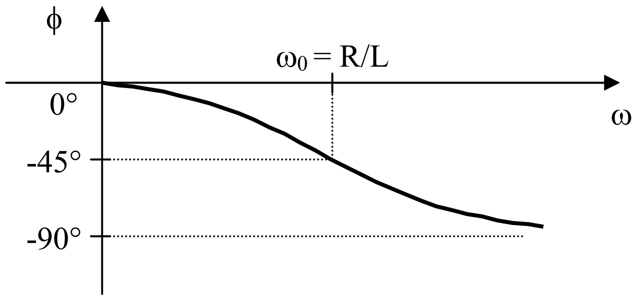

Chapter 14, Solution 3.

(a) The Thevenin impedance across the second capacitor where $\mathbf{V}_o$ is taken is

$$\mathbf{Z}_{Th} = R + R \,||\, 1/sC = R + \frac{R}{1 + sRC}$$

$$\mathbf{V}_{Th} = \frac{1/sC}{R + 1/sC}\mathbf{V}_i = \frac{\mathbf{V}_i}{1 + sRC}$$

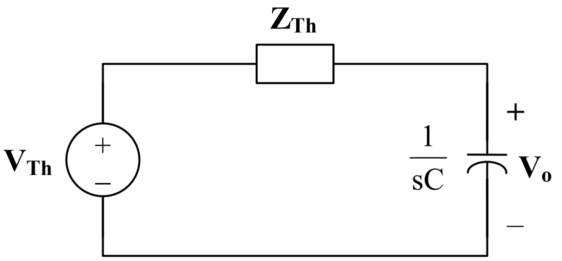

$$\mathbf{V}_o = \frac{1/sC}{\mathbf{Z}_{Th} + 1/sC} \cdot \mathbf{V}_{Th} = \frac{\mathbf{V}_i}{(1 + sRC)(1 + sC\mathbf{Z}_{Th})}$$

$$\mathbf{H}(s) = \frac{\mathbf{V}_o}{\mathbf{V}_i} = \frac{1}{(1 + sC\mathbf{Z}_{Th})(1 + sRC)} = \frac{1}{(1 + sRC)(1 + sRC + sRC/(1 + sRC))}$$

$$\mathbf{H}(s) = \underline{\frac{\mathbf{1}}{\mathbf{s^2R^2C^2 + 3sRC + 1}}}$$

(b) $\quad RC = (40 \times 10^3)(2 \times 10^{-6}) = 80 \times 10^{-3} = 0.08$

There are <u>no zeros</u> and the poles are at

$$s_1 = \frac{-0.383}{RC} = \underline{\mathbf{-4.787}}$$

$$s_2 = \frac{-2.617}{RC} = \underline{\mathbf{-32.712}}$$

Chapter 14, Solution 4.

(a) $\quad R \parallel \dfrac{1}{j\omega C} = \dfrac{R}{1 + j\omega RC}$

$$\mathbf{H}(\omega) = \frac{\mathbf{V}_o}{\mathbf{V}_i} = \frac{\dfrac{R}{1 + j\omega RC}}{j\omega L + \dfrac{R}{1 + j\omega RC}} = \frac{R}{R + j\omega L(1 + j\omega RC)}$$

$$\mathbf{H}(\omega) = \underline{\frac{\mathbf{R}}{\mathbf{-\omega^2 RLC + R + j\omega L}}}$$

(b) $\quad \mathbf{H}(\omega) = \dfrac{R + j\omega L}{R + j\omega L + 1/j\omega C} = \dfrac{j\omega C(R + j\omega L)}{1 + j\omega C(R + j\omega L)}$

$$\mathbf{H}(\omega) = \underline{\frac{\mathbf{-\omega^2 LC + j\omega RC}}{\mathbf{1 - \omega^2 LC + j\omega RC}}}$$

Chapter 14, Solution 5.

(a) $$\mathbf{H}(\omega) = \frac{\mathbf{V}_o}{\mathbf{V}_i} = \frac{1/j\omega C}{R + j\omega L + 1/j\omega C}$$

$$\mathbf{H}(\omega) = \underline{\mathbf{\frac{1}{1 + j\omega RC - \omega^2 LC}}}$$

(b) $$R \parallel \frac{1}{j\omega C} = \frac{R}{1 + j\omega RC}$$

$$\mathbf{H}(\omega) = \frac{\mathbf{V}_o}{\mathbf{V}_i} = \frac{j\omega L}{j\omega L + R/(1 + j\omega RC)} = \frac{j\omega L\,(1 + j\omega RC)}{R + j\omega L\,(1 + j\omega RC)}$$

$$\mathbf{H}(\omega) = \underline{\mathbf{\frac{j\omega L - \omega^2 RLC}{R + j\omega L - \omega^2 RLC}}}$$

Chapter 14, Solution 6.

(a) Using current division,

$$\mathbf{H}(\omega) = \frac{\mathbf{I}_o}{\mathbf{I}_i} = \frac{R}{R + j\omega L + 1/j\omega C}$$

$$\mathbf{H}(\omega) = \frac{j\omega RC}{1 + j\omega RC - \omega^2 LC} = \frac{j\omega(20)(0.25)}{1 + j\omega(20)(0.25) - \omega^2(10)(0.25)}$$

$$\mathbf{H}(\omega) = \underline{\mathbf{\frac{j\omega 5}{1 + j\omega 5 - 2.5\omega^2}}}$$

(b) We apply nodal analysis to the circuit below.

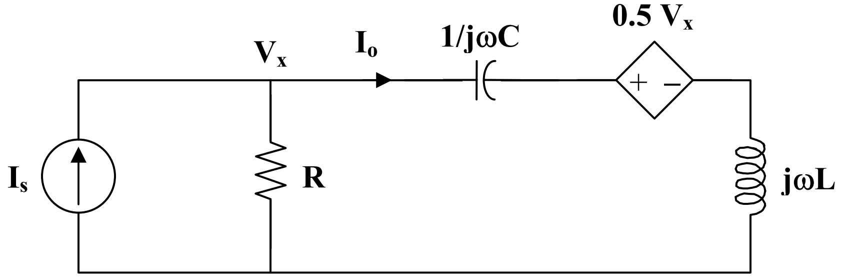

$$\mathbf{I}_s = \frac{\mathbf{V}_x}{R} + \frac{\mathbf{V}_x - 0.5\mathbf{V}_x}{j\omega L + 1/j\omega C}$$

But $\mathbf{I}_o = \dfrac{0.5\,\mathbf{V}_x}{j\omega L + 1/j\omega C} \longrightarrow \mathbf{V}_x = 2\,\mathbf{I}_o\,(j\omega L + 1/j\omega C)$

$$\frac{\mathbf{I}_s}{\mathbf{V}_x} = \frac{1}{R} + \frac{0.5}{j\omega L + 1/j\omega C}$$

$$\frac{\mathbf{I}_s}{2\,\mathbf{I}_o\,(j\omega L + 1/j\omega C)} = \frac{1}{R} + \frac{1}{2\,(j\omega L + 1/j\omega C)}$$

$$\frac{\mathbf{I}_s}{\mathbf{I}_o} = \frac{2\,(j\omega L + 1/j\omega C)}{R} + 1$$

$$\mathbf{H}(\omega) = \frac{\mathbf{I}_o}{\mathbf{I}_s} = \frac{1}{1 + 2\,(j\omega L + 1/j\omega C)/R} = \frac{j\omega RC}{j\omega RC + 2\,(1 - \omega^2 LC)}$$

$$\mathbf{H}(\omega) = \frac{j\omega}{j\omega + 2\,(1 - \omega^2\,0.25)}$$

$$\mathbf{H}(\omega) = \underline{\frac{\mathbf{j\omega}}{\mathbf{2 + j\omega - 0.5\omega^2}}}$$

Chapter 14, Solution 7.

(a)
$$0.05 = 20\log_{10} H$$
$$2.5 \times 10^{-3} = \log_{10} H$$
$$H = 10^{2.5\times10^{-3}} = \underline{\mathbf{1.005773}}$$

(b)
$$-6.2 = 20\log_{10} H$$
$$-0.31 = \log_{10} H$$
$$H = 10^{-0.31} = \underline{\mathbf{0.4898}}$$

(c)
$$104.7 = 20\log_{10} H$$
$$5.235 = \log_{10} H$$
$$H = 10^{5.235} = \underline{\mathbf{1.718 \times 10^5}}$$

Chapter 14, Solution 8.

(a) $H = 0.05$

$H_{dB} = 20\log_{10} 0.05 = \underline{\mathbf{-26.02}}, \qquad \phi = \underline{\mathbf{0°}}$

(b) $H = 125$

$H_{dB} = 20\log_{10} 125 = \underline{\mathbf{41.94}}, \qquad \phi = \underline{\mathbf{0°}}$

(c) $H(1) = \dfrac{j10}{2+j} = 4.472\angle 63.43°$

$H_{dB} = 20\log_{10} 4.472 = \underline{\mathbf{13.01}}, \qquad \phi = \underline{\mathbf{63.43°}}$

(d) $H(1) = \dfrac{3}{1+j} + \dfrac{6}{2+j} = 3.9 - j1.7 = 4.254\angle -23.55°$

$H_{dB} = 20\log_{10} 4.254 = \underline{\mathbf{12.577}}, \qquad \phi = \underline{\mathbf{-23.55°}}$

Chapter 14, Solution 9.

$$\mathbf{H}(\omega) = \frac{1}{(1+j\omega)(1+j\omega/10)}$$

$$H_{dB} = -20\log_{10}\left|1+j\omega\right| - 20\log_{10}\left|1+j\omega/10\right|$$

$$\phi = -\tan^{-1}(\omega) - \tan^{-1}(\omega/10)$$

<u>The magnitude and phase plots are shown below</u>.

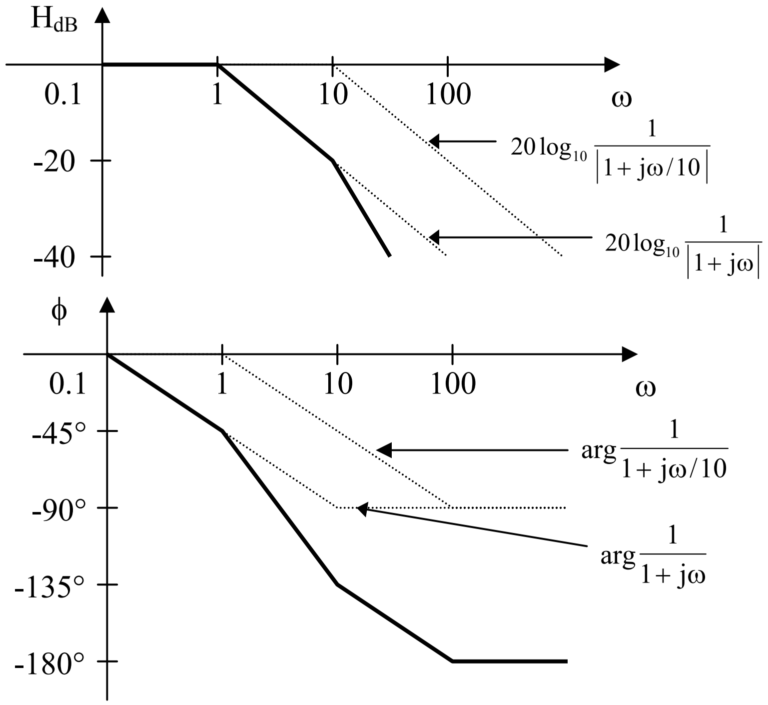

Chapter 14, Solution 10.

$$H(j\omega) = \frac{50}{j\omega(5 + j\omega)} = \frac{10}{1j\omega\left(1 + \frac{j\omega}{5}\right)}$$

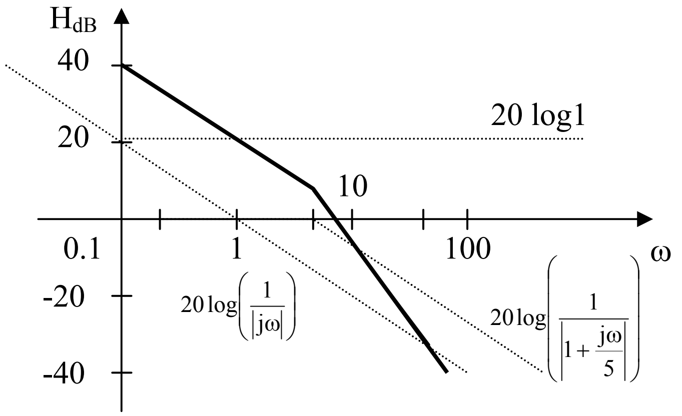

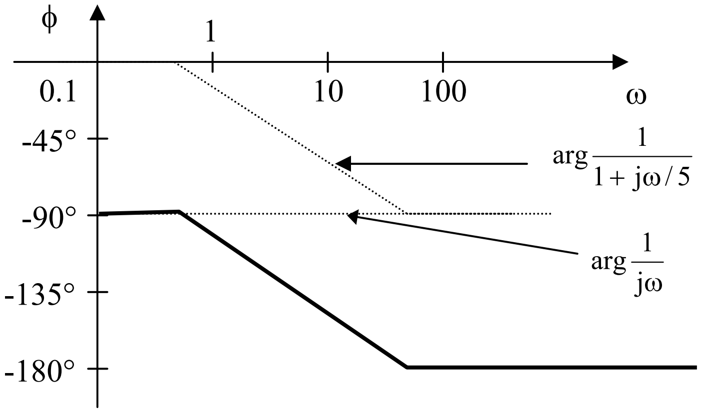

Chapter 14, Solution 11.

$$\mathbf{H}(\omega) = \frac{5(1 + j\omega/10)}{j\omega(1 + j\omega/2)}$$

$$H_{dB} = 20\log_{10} 5 + 20\log_{10}\left|1 + j\omega/10\right| - 20\log_{10}\left|j\omega\right| - 20\log_{10}\left|1 + j\omega/2\right|$$

$$\phi = -90° + \tan^{-1}\omega/10 - \tan^{-1}\omega/2$$

The magnitude and phase plots are shown below.

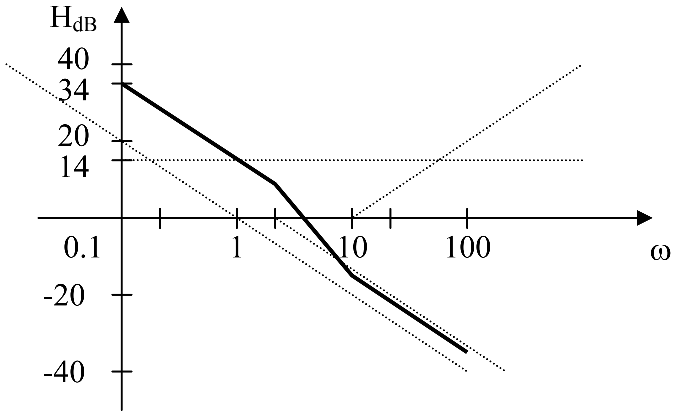

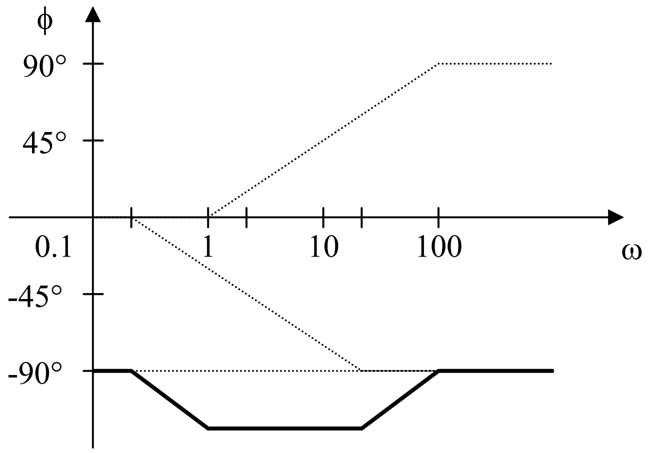

Chapter 14, Solution 12.

$$T(w) = \frac{0.1(1 + j\omega)}{j\omega(1 + j\omega/10)}, \qquad 20\log 0.1 = -20$$

The plots are shown below.

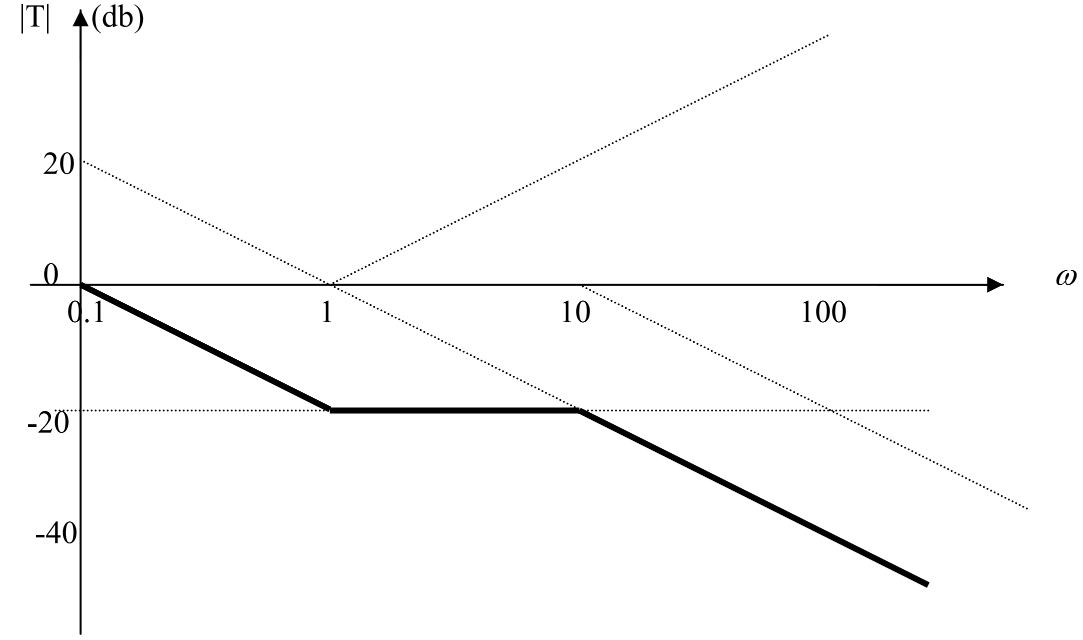

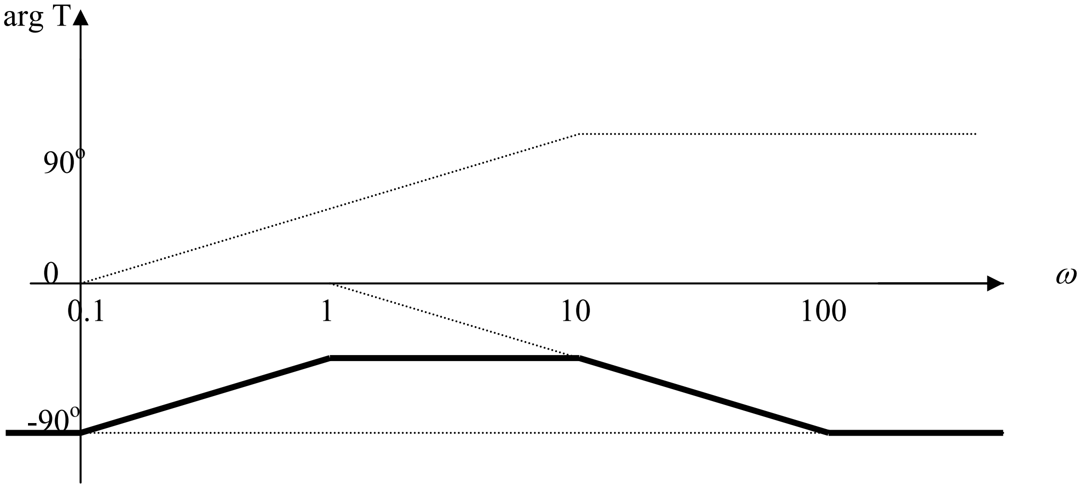

Chapter 14, Solution 13.

$$\mathbf{G}(\omega) = \frac{1 + j\omega}{(j\omega)^2 (10 + j\omega)} = \frac{(1/10)(1 + j\omega)}{(j\omega)^2 (1 + j\omega/10)}$$

$$G_{dB} = -20 + 20\log_{10}\left|1 + j\omega\right| - 40\log_{10}\left|j\omega\right| - 20\log_{10}\left|1 + j\omega/10\right|$$
$$\phi = -180° + \tan^{-1}\omega - \tan^{-1}\omega/10$$

<u>The magnitude and phase plots are shown below</u>.

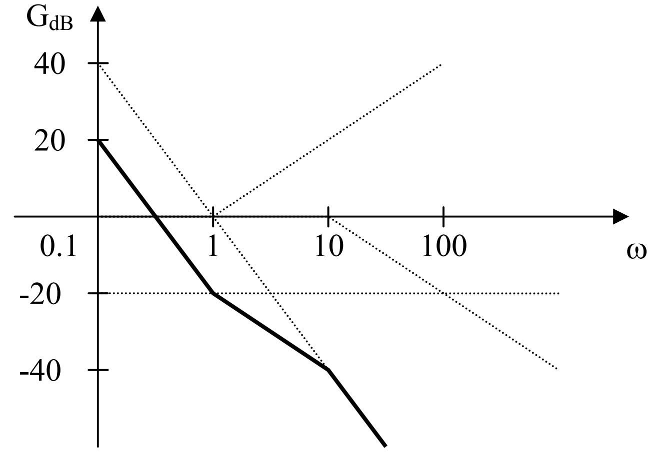

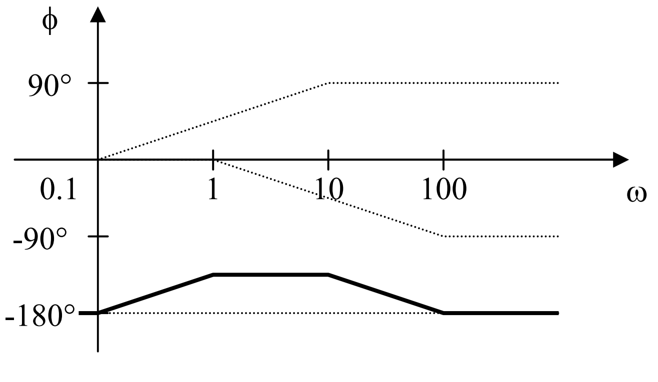

Chapter 14, Solution 14.

$$\mathbf{H}(\omega) = \frac{50}{25}\frac{1 + j\omega}{j\omega\left(1 + \frac{j\omega 10}{25} + \left(\frac{j\omega}{5}\right)^2\right)}$$

$$H_{dB} = 20\log_{10} 2 + 20\log_{10}\left|1 + j\omega\right| - 20\log_{10}\left|j\omega\right|$$

$$- 20\log_{10}\left|1 + j\omega 2/5 + (j\omega/5)^2\right|$$

$$\phi = \text{-}90° + \tan^{-1}\omega - \tan^{-1}\left(\frac{\omega 10/25}{1 - \omega^2/5}\right)$$

<u>**The magnitude and phase plots are shown below**</u>.

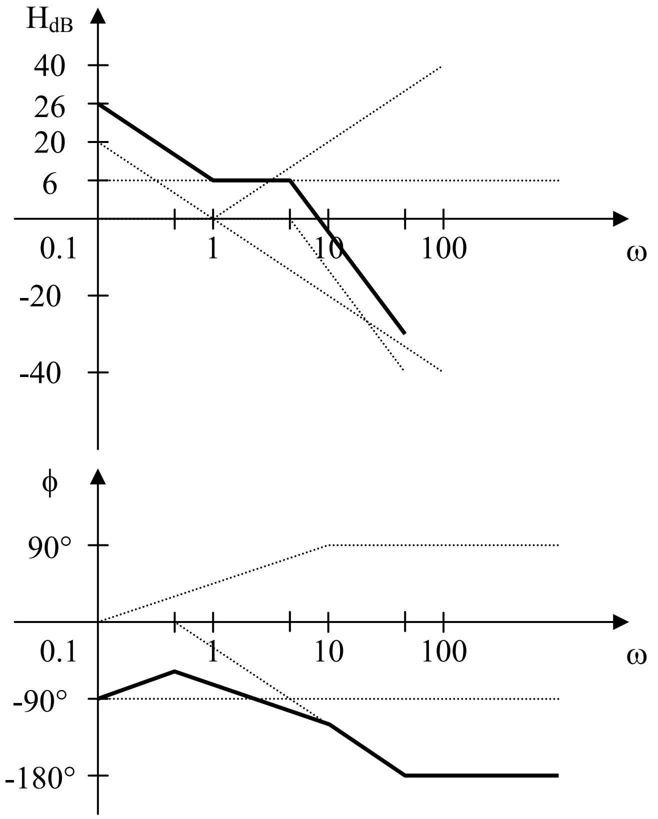

Chapter 14, Solution 15.

$$\mathbf{H}(\omega) = \frac{40(1+j\omega)}{(2+j\omega)(10+j\omega)} = \frac{2(1+j\omega)}{(1+j\omega/2)(1+j\omega/10)}$$

$$H_{dB} = 20\log_{10} 2 + 20\log_{10}\left|1+j\omega\right| - 20\log_{10}\left|1+j\omega/2\right| - 20\log_{10}\left|1+j\omega/10\right|$$

$$\phi = \tan^{-1}\omega - \tan^{-1}\omega/2 - \tan^{-1}\omega/10$$

<u>**The magnitude and phase plots are shown below**</u>.

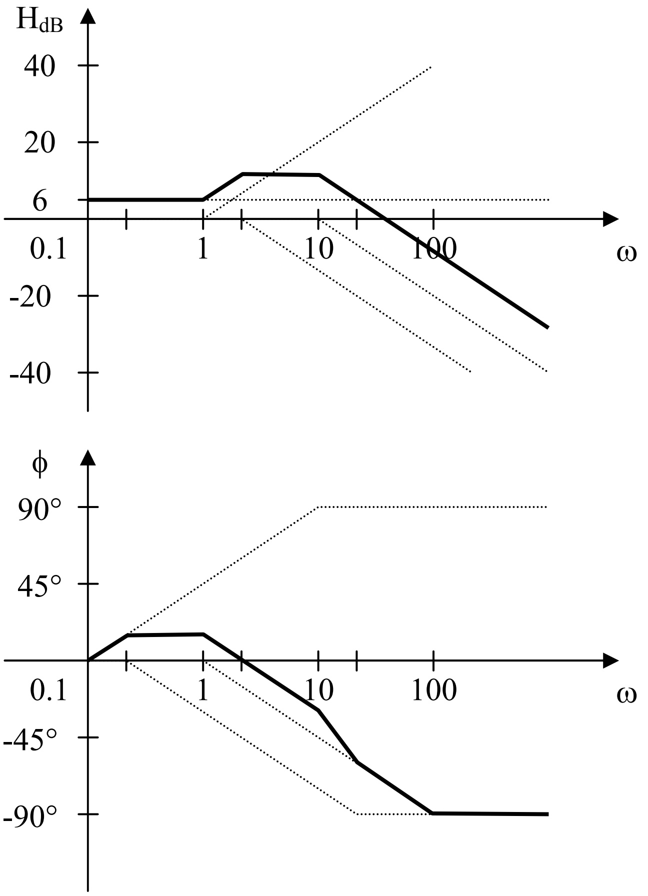

Chapter 14, Solution 16.

$$G(\omega) = \frac{j\omega}{100(1+j\omega)\left(1+\frac{j\omega}{10}\right)^2}$$

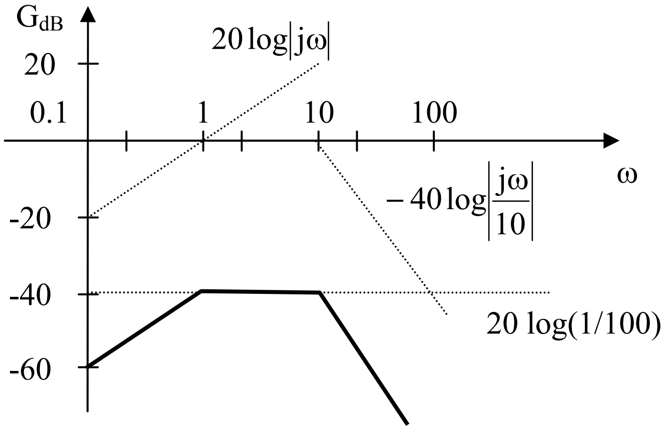

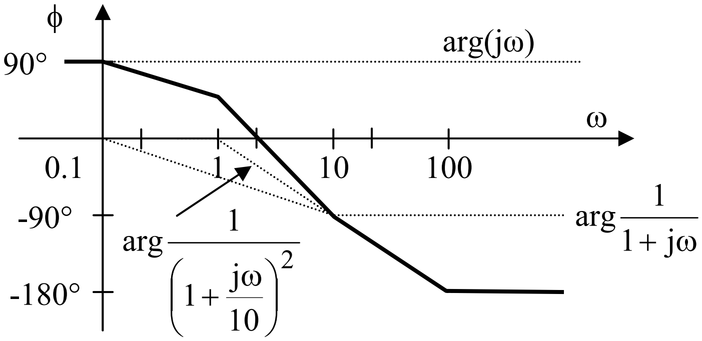

Chapter 14, Solution 17.

$$\mathbf{G}(\omega) = \frac{(1/4)\,j\omega}{(1+j\omega)(1+j\omega/2)^2}$$

$$G_{dB} = -20\log_{10}4 + 20\log_{10}\left| j\omega \right| - 20\log_{10}\left|1+j\omega\right| - 40\log_{10}\left|1+j\omega/2\right|$$

$$\phi = -90° - \tan^{-1}\omega - 2\tan^{-1}\omega/2$$

<u>The magnitude and phase plots are shown below</u>.

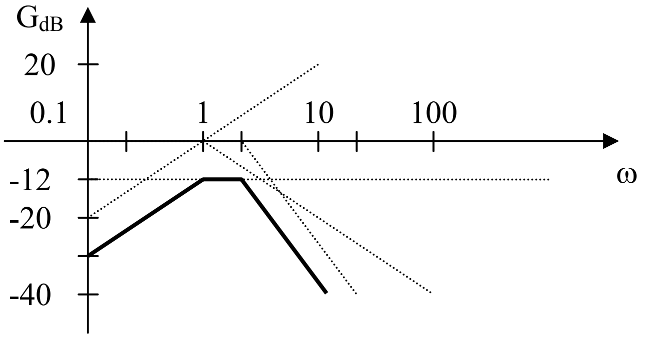

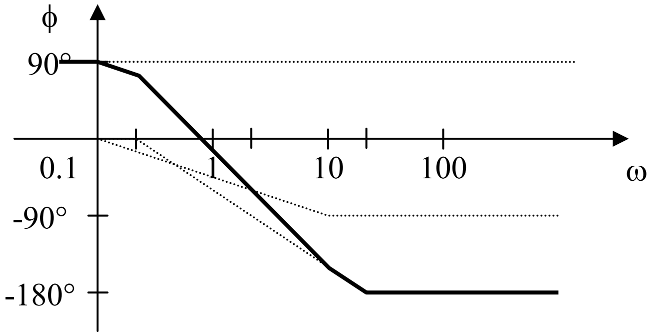

Chapter 14, Solution 18.

$$\mathbf{G}(\omega) = \frac{4(1 + j\omega/2)^2}{50\, j\omega(1 + j\omega/5)(1 + j\omega/10)}$$

$$G_{dB} = 20\log_{10} 4/50 + 40\log_{10}\left|1 + j\omega/2\right| - 20\log_{10}\left|j\omega\right|$$

$$- 20\log_{10}\left|1 + j\omega/5\right| - 20\log_{10}\left|1 + j\omega/10\right|$$

where $20\log_{10} 4/50 = \text{-}21.94$

$$\phi = \text{-}90° + 2\tan^{-1}\omega/2 - \tan^{-1}\omega/5 - \tan^{-1}\omega/10$$

<u>The magnitude and phase plots are shown below</u>.

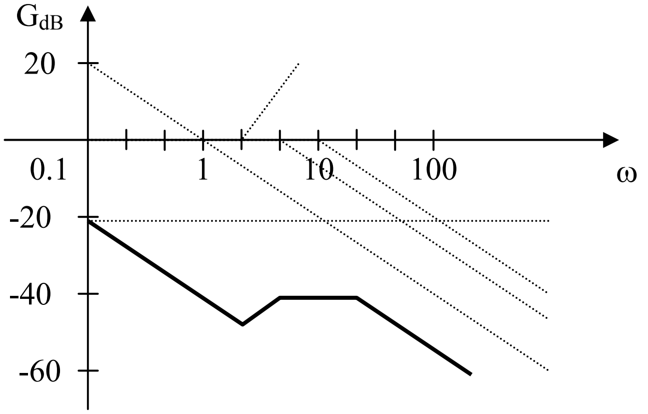

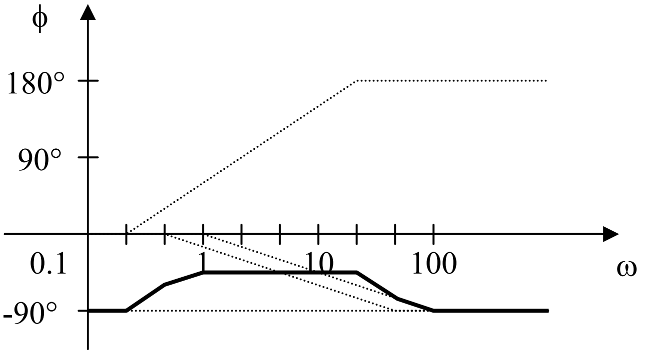

Chapter 14, Solution 19.

$$\mathbf{H}(\omega) = \frac{j\omega}{100(1 + j\omega/10 - \omega^2/100)}$$

$$H_{dB} = 20\log_{10}|j\omega| - 20\log_{10}100 - 20\log_{10}\left|1 + j\omega/10 - \omega^2/100\right|$$

$$\phi = 90° - \tan^{-1}\left(\frac{\omega/10}{1 - \omega^2/100}\right)$$

<u>The magnitude and phase plots are shown below</u>.

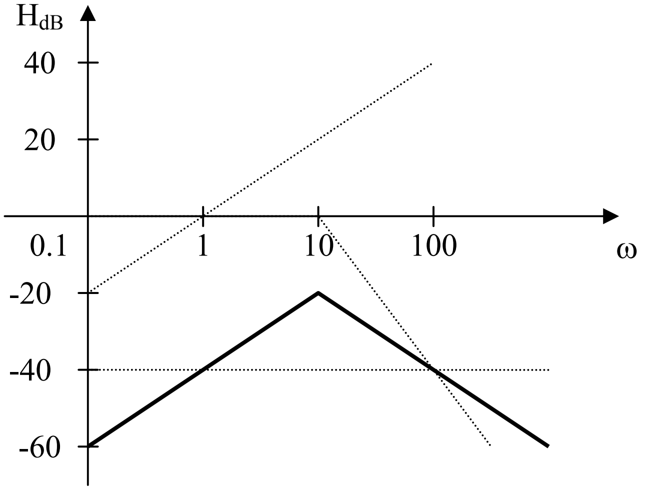

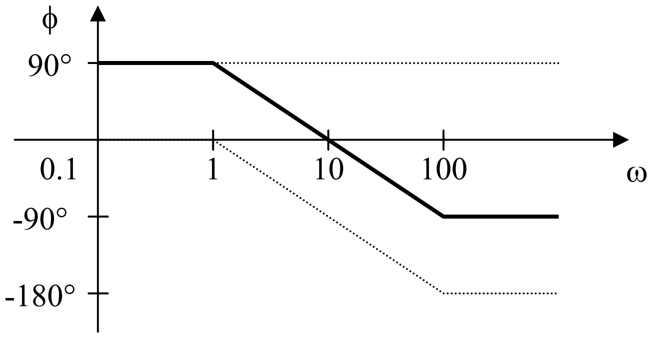

Chapter 14, Solution 20.

$$\mathbf{N}(\omega) = \frac{10(1 + j\omega - \omega^2)}{(1 + j\omega)(1 + j\omega/10)}$$

$$N_{dB} = 20 - 20\log_{10}\left|1 + j\omega\right| - 20\log_{10}\left|1 + j\omega/10\right| + 20\log_{10}\left|1 + j\omega - \omega^2\right|$$

$$\phi = \tan^{-1}\left(\frac{\omega}{1 - \omega^2}\right) - \tan^{-1}\omega - \tan^{-1}\omega/10$$

__The magnitude and phase plots are shown below__.

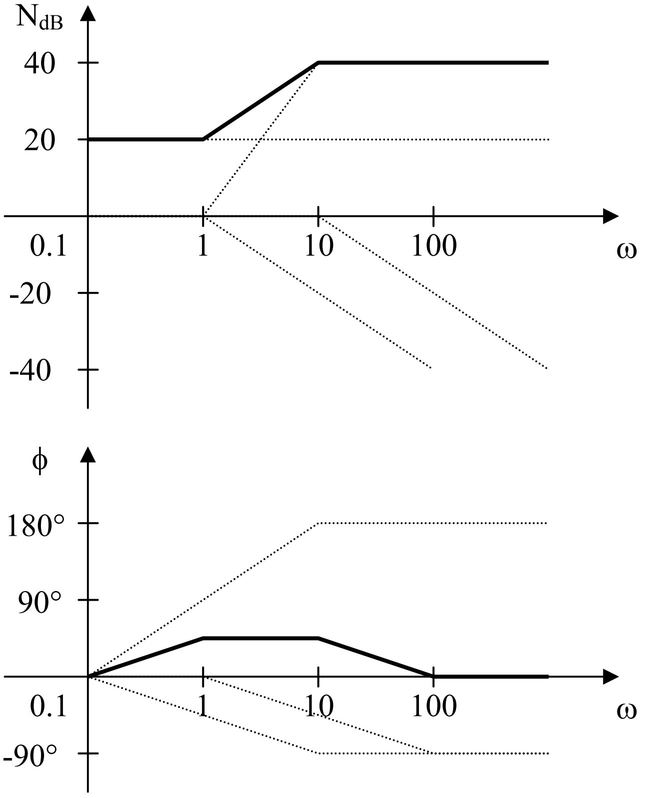

Chapter 14, Solution 21.

$$\mathbf{T}(\omega) = \frac{j\omega(1 + j\omega)}{100(1 + j\omega/10)(1 + j\omega/10 - \omega^2/100)}$$

$$T_{dB} = 20\log_{10}\left|j\omega\right| + 20\log_{10}\left|1 + j\omega\right| - 20\log_{10}100$$

$$- 20\log_{10}\left|1 + j\omega/10\right| - 20\log_{10}\left|1 + j\omega/10 - \omega^2/100\right|$$

$$\phi = 90° + \tan^{-1}\omega - \tan^{-1}\omega/10 - \tan^{-1}\left(\frac{\omega/10}{1 - \omega^2/100}\right)$$

<u>The magnitude and phase plots are shown below</u>.

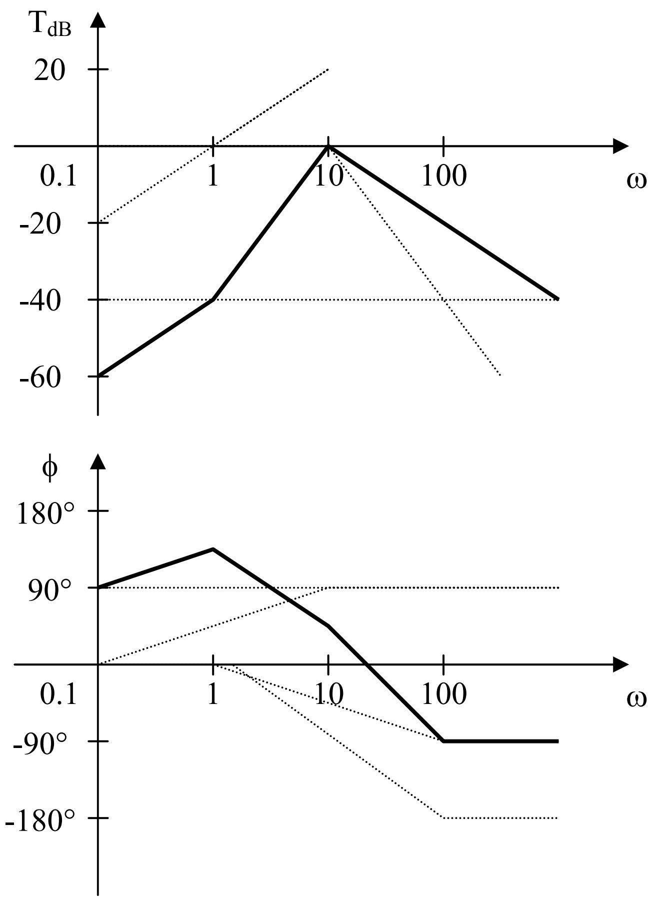

Chapter 14, Solution 22.

$$20 = 20\log_{10} k \longrightarrow k = 10$$

A zero of slope $+20$ dB/dec at $\omega = 2 \longrightarrow 1 + j\omega/2$

A pole of slope -20 dB/dec at $\omega = 20 \longrightarrow \dfrac{1}{1 + j\omega/20}$

A pole of slope -20 dB/dec at $\omega = 100$ $\longrightarrow$ $\dfrac{1}{1 + j\omega/100}$

Hence,

$$\mathbf{H}(\omega) = \frac{10(1 + j\omega/2)}{(1 + j\omega/20)(1 + j\omega/100)}$$

$$\mathbf{H}(\omega) = \underline{\mathbf{\frac{10^4 (2 + j\omega)}{(20 + j\omega)(100 + j\omega)}}}$$

Chapter 14, Solution 23.

A zero of slope +20 dB/dec at the origin $\longrightarrow$ $j\omega$

A pole of slope -20 dB/dec at $\omega = 1$ $\longrightarrow$ $\dfrac{1}{1 + j\omega/1}$

A pole of slope -40 dB/dec at $\omega = 10$ $\longrightarrow$ $\dfrac{1}{(1 + j\omega/10)^2}$

Hence,

$$\mathbf{H}(\omega) = \frac{j\omega}{(1 + j\omega)(1 + j\omega/10)^2}$$

$$\mathbf{H}(\omega) = \underline{\mathbf{\frac{100\, j\omega}{(1 + j\omega)(10 + j\omega)^2}}}$$

Chapter 14, Solution 24.

The phase plot is decomposed as shown below.

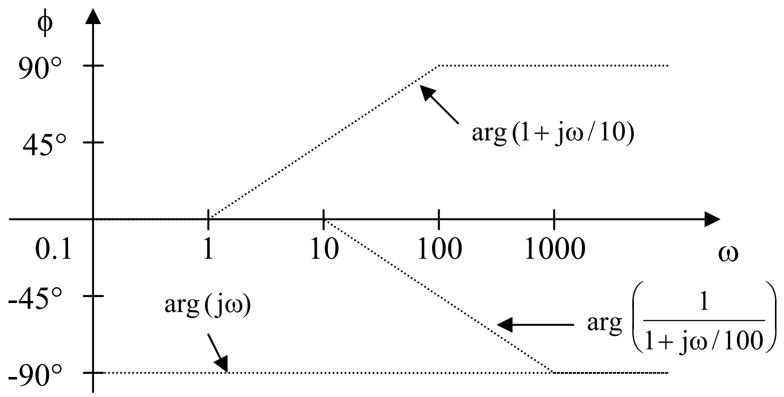

$$\mathbf{G}(\omega) = \frac{k'(1 + j\omega/10)}{j\omega(1 + j\omega/100)} = \frac{k'(10)(10 + j\omega)}{j\omega(100 + j\omega)}$$

where k' is a constant since $\arg k' = 0$.

Hence, $\mathbf{G}(\omega) = \underline{\dfrac{\mathbf{k\,(10 + j\omega)}}{\mathbf{j\omega(100 + j\omega)}}}$, where $\underline{\mathbf{k = 10k'\ \text{is constant}}}$

Chapter 14, Solution 25.

$$\omega_0 = \frac{1}{\sqrt{LC}} = \frac{1}{\sqrt{(40 \times 10^{-3})(1 \times 10^{-6})}} = 5\ \text{krad/s}$$

$$\mathbf{Z}(\omega_0) = R = \underline{\mathbf{2\ k\Omega}}$$

$$\mathbf{Z}(\omega_0/4) = R + j\left(\frac{\omega_0}{4}L - \frac{4}{\omega_0 C}\right)$$

$$\mathbf{Z}(\omega_0/4) = 2000 + j\left(\frac{5 \times 10^3}{4} \cdot 40 \times 10^{-3} - \frac{4}{(5 \times 10^3)(1 \times 10^{-6})}\right)$$

$$\mathbf{Z}(\omega_0/4) = 2000 + j(50 - 4000/5)$$

$$\mathbf{Z}(\omega_0/4) = \underline{\mathbf{2 - j0.75\ k\Omega}}$$

$$\mathbf{Z}(\omega_0/2) = R + j\left(\frac{\omega_0}{2}L - \frac{2}{\omega_0 C}\right)$$

$$\mathbf{Z}(\omega_0/2) = 2000 + j\left(\frac{(5 \times 10^3)}{2}(40 \times 10^{-3}) - \frac{2}{(5 \times 10^3)(1 \times 10^{-6})}\right)$$

$$\mathbf{Z}(\omega_0/4) = 2000 + j(100 - 2000/5)$$

$$\mathbf{Z}(\omega_0/2) = \underline{\mathbf{2 - j0.3\ k\Omega}}$$

$$\mathbf{Z}(2\omega_0) = R + j\left(2\omega_0 L - \frac{1}{2\omega_0 C}\right)$$

$$\mathbf{Z}(2\omega_0) = 2000 + j\left((2)(5\times10^3)(40\times10^{-3}) - \frac{1}{(2)(5\times10^3)(1\times10^{-6})}\right)$$

$$\mathbf{Z}(2\omega_0) = \underline{\mathbf{2 + j0.3\ k\Omega}}$$

$$\mathbf{Z}(4\omega_0) = R + j\left(4\omega_0 L - \frac{1}{4\omega_0 C}\right)$$

$$\mathbf{Z}(4\omega_0) = 2000 + j\left((4)(5\times10^3)(40\times10^{-3}) - \frac{1}{(4)(5\times10^3)(1\times10^{-6})}\right)$$

$$\mathbf{Z}(4\omega_0) = \underline{\mathbf{2 + j0.75\ k\Omega}}$$

Chapter 14, Solution 26.

(a) $$f_o = \frac{1}{2\pi\sqrt{LC}} = \frac{1}{2\pi\sqrt{5x10^{-9}x10x10^{-3}}} = \underline{22.51\,\text{kHz}}$$

(b) $$B = \frac{R}{L} = \frac{100}{10x10^{-3}} = \underline{10\,\text{krad/s}}$$

(c) $$Q = \frac{\omega_o L}{R} = \frac{1}{\sqrt{LC}}\frac{L}{R} = \frac{10^6}{\sqrt{50}}\frac{10x10^{-3}}{0.1x10^3} = \underline{14.142}$$

Chapter 14, Solution 27.

At resonance,

$$\mathbf{Z} = R = 10\,\Omega, \qquad \omega_0 = \frac{1}{\sqrt{LC}}$$

$$B = \frac{R}{L} \qquad \text{and} \qquad Q = \frac{\omega_0}{B} = \frac{\omega_0 L}{R}$$

Hence,

$$L = \frac{RQ}{\omega_0} = \frac{(10)(80)}{50} = 16\ \text{H}$$

$$C = \frac{1}{\omega_0^2 L} = \frac{1}{(50)^2(16)} = 25\ \mu F$$

$$B = \frac{R}{L} = \frac{10}{16} = 0.625\ \text{rad/s}$$

Therefore,

$R = \underline{\mathbf{10\ \Omega}}$, $L = \underline{\mathbf{16\ H}}$, $C = \underline{\mathbf{25\ \mu F}}$, $B = \underline{\mathbf{0.625\ rad/s}}$

Chapter 14, Solution 28.

Let $R = 10\ \Omega$.

$$L = \frac{R}{B} = \frac{10}{20} = 0.5\ H$$

$$C = \frac{1}{\omega_0^2 L} = \frac{1}{(1000)^2(0.5)} = 2\ \mu F$$

$$Q = \frac{\omega_0}{B} = \frac{1000}{20} = 50$$

Therefore, if $R = 10\ \Omega$ then

$L = \underline{\mathbf{0.5\ H}}$, $C = \underline{\mathbf{2\ \mu F}}$, $Q = \underline{\mathbf{50}}$

Chapter 14, Solution 29.

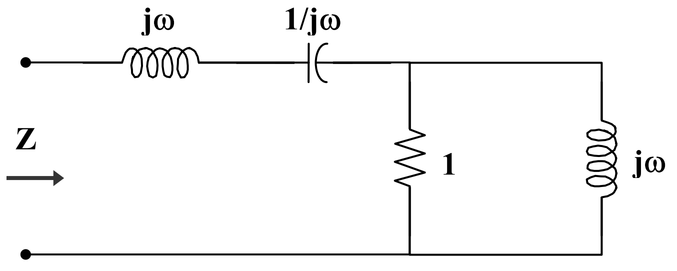

$$\mathbf{Z} = j\omega + \frac{1}{j\omega} + \frac{j\omega}{1 + j\omega}$$

$$\mathbf{Z} = j\left(\omega - \frac{1}{\omega}\right) + \frac{\omega^2 + j\omega}{1+\omega^2}$$

Since v(t) and i(t) are in phase,

$$\mathrm{Im}(\mathbf{Z}) = 0 = \omega - \frac{1}{\omega} + \frac{\omega}{1+\omega^2}$$

$$\omega^4 + \omega^2 - 1 = 0$$

$$\omega^2 = \frac{-1 \pm \sqrt{1+4}}{2} = 0.618$$

$$\omega = \underline{\mathbf{0.7861\ rad/s}}$$

Chapter 14, Solution 30.

Select $R = 10\,\Omega$.

$$L = \frac{R}{\omega_0 Q} = \frac{10}{(10)(20)} = 0.05\text{ H} = 5\text{ mH}$$

$$C = \frac{1}{\omega_0^2 L} = \frac{1}{(100)(0.05)} = 0.2\text{ F}$$

$$B = \frac{1}{RC} = \frac{1}{(10)(0.2)} = 0.5\text{ rad/s}$$

Therefore, if $R = 10\,\Omega$ then

$L = \underline{\mathbf{5\ mH}}$, $C = \underline{\mathbf{0.2\ F}}$, $B = \underline{\mathbf{0.5\ rad/s}}$

Chapter 14, Solution 31.

$$X_L = \omega L \longrightarrow L = \frac{X_L}{\omega}$$

$$B = \frac{R}{L} = \frac{\omega R}{X_L} = \frac{2\pi x10x10^6 x5.6x10^3}{40x10^3} = \underline{8.796x10^6\text{ rad/s}}$$

Chapter 14, Solution 32.

Since $Q > 10$,

$$\omega_1 = \omega_0 - \frac{B}{2}, \qquad \omega_2 = \omega_0 + \frac{B}{2}$$

$$B = \frac{\omega_0}{Q} = \frac{6\times10^6}{120} = \underline{\mathbf{50\ krad/s}}$$

$$\omega_1 = 6 - 0.025 = \underline{\mathbf{5.975\times10^6\ rad/s}}$$

$$\omega_2 = 6 + 0.025 = \underline{\mathbf{6.025\times10^6\ rad/s}}$$

Chapter 14, Solution 33.

$$Q = \omega_o RC \quad \longrightarrow \quad C = \frac{Q}{2\pi f_o R} = \frac{80}{2\pi x 5.6x10^6 x 40x10^3} = \underline{56.84\ \ pF}$$

$$Q = \frac{R}{\omega_o L} \quad \longrightarrow \quad L = \frac{R}{2\pi f_o Q} = \frac{40x10^3}{2\pi x 5.6x10^6 x 80} = \underline{14.21\ \ \mu H}$$

Chapter 14, Solution 34.

(a) $$\omega_o = \frac{1}{\sqrt{LC}} = \frac{1}{\sqrt{8x10^{-3} x 60x10^{-6}}} = \underline{1.443\ krad/s}$$

(b) $$B = \frac{1}{RC} = \frac{1}{5x10^3 x 60x10^{-6}} = \underline{3.33\ rad/s}$$

(c) $$Q = \omega_o RC = 1.443x10^3 x 5x10^3 x 60x10^{-6} = \underline{432.9}$$

Chapter 14, Solution 35.

At resonance,

$$\mathbf{Y} = \frac{1}{R} \longrightarrow R = \frac{1}{Y} = \frac{1}{25\times10^{-3}} = \underline{\mathbf{40\ \Omega}}$$

$$Q = \omega_0 RC \longrightarrow C = \frac{Q}{\omega_0 R} = \frac{80}{(200\times10^3)(40)} = \underline{\mathbf{10\ \mu F}}$$

$$\omega_0 = \frac{1}{\sqrt{LC}} \longrightarrow L = \frac{1}{\omega_0^2 C} = \frac{1}{(4\times10^{10})(10\times10^{-6})} = \underline{\mathbf{2.5\ \mu H}}$$

$$B = \frac{\omega_0}{Q} = \frac{200\times10^3}{80} = \underline{\mathbf{2.5\ krad/s}}$$

$$\omega_1 = \omega_0 - \frac{B}{2} = 200 - 2.5 = \underline{\mathbf{197.5\ krad/s}}$$

$$\omega_1 = \omega_0 + \frac{B}{2} = 200 + 2.5 = \underline{\mathbf{202.5\ krad/s}}$$

Chapter 14, Solution 36.

$$\omega_0 = \frac{1}{\sqrt{LC}} = 5000\ \text{rad/s}$$

$$\mathbf{Y}(\omega_0) = \frac{1}{R} \longrightarrow \mathbf{Z}(\omega_0) = R = \underline{\mathbf{2\ k\Omega}}$$

$$\mathbf{Y}(\omega_0/4) = \frac{1}{R} + j\left(\frac{\omega_0}{4}C - \frac{4}{\omega_0 L}\right) = 0.5 - j18.75\ \text{kS}$$

$$\mathbf{Z}(\omega_0/4) = \frac{1}{0.0005 - j0.01875} = \underline{\mathbf{1.4212 + j53.3\ \Omega}}$$

$$\mathbf{Y}(\omega_0/2) = \frac{1}{R} + j\left(\frac{\omega_0}{2}C - \frac{2}{\omega_0 L}\right) = 0.5 - j7.5\ \text{kS}$$

$$\mathbf{Z}(\omega_0/2) = \frac{1}{0.0005 - j0.0075} = \underline{\mathbf{8.85 + j132.74\ \Omega}}$$

$$\mathbf{Y}(2\omega_0) = \frac{1}{R} + j\left(2\omega_0 L - \frac{1}{2\omega_0 C}\right) = 0.5 + j7.5\ \text{kS}$$

$$\mathbf{Z}(2\omega_0) = \underline{\mathbf{8.85 - j132.74\ \Omega}}$$

$$\mathbf{Y}(4\omega_0) = \frac{1}{R} + j\left(4\omega_0 L - \frac{1}{4\omega_0 C}\right) = 0.5 + j18.75\ \text{kS}$$

$$\mathbf{Z}(4\omega_0) = \underline{\mathbf{1.4212 - j53.3\ \Omega}}$$

Chapter 14, Solution 37.

$$Z = j\omega L // (R + \frac{1}{j\omega C}) = \frac{j\omega L(R + \frac{1}{j\omega C})}{R + \frac{1}{j\omega C} + j\omega L} = \frac{\left(\frac{L}{C} + j\omega LR\right)\left(R + j(\omega L - \frac{1}{\omega C})\right)}{R^2 + (\omega L - \frac{1}{\omega C})^2}$$

$$\text{Im}(Z) = \frac{\omega LR^2 + \frac{L}{C}\left(\omega L - \frac{1}{\omega C}\right)}{R^2 + (\omega L - \frac{1}{\omega C})^2} = 0 \quad \longrightarrow \quad \omega^2(R^2C^2 + LC) = 1$$

Thus,

$$\underline{\omega = \frac{1}{\sqrt{LC + R^2C^2}}}$$

Chapter 14, Solution 38.

$$Y \frac{1}{R + j\omega L} + j\omega C = j\omega C + \frac{R - j\omega L}{R^2 + \omega^2 L^2}$$

At resonance, $\text{Im}(\mathbf{Y}) = 0$, i.e.

$$\omega_0 C - \frac{\omega_0 L}{R^2 + \omega_0^2 L^2} = 0$$

$$R^2 + \omega_0^2 L^2 = \frac{L}{C}$$

$$\omega_0 = \sqrt{\frac{1}{LC} - \frac{R^2}{L^2}} = \sqrt{\frac{1}{(40\times 10^{-3})(10\times 10^{-6})} - \left(\frac{50}{40\times 10^{-3}}\right)^2}$$

$$\omega_0 = \underline{\mathbf{4841\ rad/s}}$$

Chapter 14, Solution 39.

(a) $B = \omega_2 - \omega_1 = 2\pi(f_2 - f_1) = 2\pi(90-86)x10^3 = 8\pi krad/s$

$$\omega_o = \frac{1}{2}(\omega_1 + \omega_2) = 2\pi(88)x10^3 = 176\pi$$

$$B = \frac{1}{RC} \longrightarrow C = \frac{1}{BR} = \frac{1}{8\pi x10^3 x2x10^3} = \underline{19.89nF}$$

(b) $\omega_o = \frac{1}{\sqrt{LC}} \longrightarrow L = \frac{1}{\omega^2{}_o C} = \frac{1}{(176\pi)^2 x19.89x10^{-9}} = \underline{164.4H}$

(c) $\omega_o = 176\pi = \underline{552.9krad/s}$

(d) $B = 8\pi = \underline{25.13krad/s}$

(e) $Q = \frac{\omega_o}{B} = \frac{176\pi}{8\pi} = \underline{22}$

Chapter 14, Solution 40.

(a) L = 5 + 10 = 15 mH

$$\omega_0 = \frac{1}{\sqrt{LC}} = \frac{1}{\sqrt{15x10^{-3}x20x10^{-6}}} = \underline{\mathbf{1.8257\ k\ rad/sec}}$$

$$Q = \omega_0 RC = 1.8257x10^3 x25x10^3 x20x10^{-6} = \underline{\mathbf{912.8}}$$

$$B = \frac{1}{RC} = \frac{1}{25x10^3 20x10^{-6}} = \underline{\mathbf{2\ rad}}$$

(b) To increase B by 100% means that B' = 4.

$$C' = \frac{1}{RB'} = \frac{1}{25x10^3 x4} = \underline{\mathbf{10\ \mu F}}$$

Since $C' = \frac{C_1 C_2}{C_1 + C_2} = 10\mu F$ and $C_1 = 20\ \mu F$, we then obtain $C_2 = 20\ \mu F$.

Therefore, to increase the bandwidth, we merely **add another 20 μF in series with the first one**.

Chapter 14, Solution 41.

(a) This is a series RLC circuit.

$$R = 2 + 6 = 8\,\Omega, \qquad L = 1\,H, \qquad C = 0.4\,F$$

$$\omega_0 = \frac{1}{\sqrt{LC}} = \frac{1}{\sqrt{0.4}} = \underline{\mathbf{1.5811\ rad/s}}$$

$$Q = \frac{\omega_0 L}{R} = \frac{1.5811}{8} = \underline{\mathbf{0.1976}}$$

$$B = \frac{R}{L} = \underline{\mathbf{8\ rad/s}}$$

(b) This is a parallel RLC circuit.

$$3\ \mu F \text{ and } 6\ \mu F \longrightarrow \frac{(3)(6)}{3+6} = 2\ \mu F$$

$$C = 2\ \mu F, \qquad R = 2\ k\Omega, \qquad L = 20\ mH$$

$$\omega_0 = \frac{1}{\sqrt{LC}} = \frac{1}{\sqrt{(2\times10^{-6})(20\times10^{-3})}} = \underline{\mathbf{5\ krad/s}}$$

$$Q = \frac{R}{\omega_0 L} = \frac{2\times10^{3}}{(5\times10^{3})(20\times10^{-3})} = \underline{\mathbf{20}}$$

$$B = \frac{1}{RC} = \frac{1}{(2\times10^{3})(2\times10^{-6})} = \underline{\mathbf{250\ krad/s}}$$

Chapter 14, Solution 42.

(a) $\mathbf{Z}_{in} = (1/j\omega C) \,||\, (R + j\omega L)$

$$\mathbf{Z}_{in} = \frac{\dfrac{R + j\omega L}{j\omega C}}{R + j\omega L + \dfrac{1}{j\omega C}} = \frac{R + j\omega L}{1 - \omega^2 LC + j\omega RC}$$

$$\mathbf{Z}_{in} = \frac{(R + j\omega L)(1 - \omega^2 LC - j\omega RC)}{(1 - \omega^2 LC)^2 + \omega^2 R^2 C^2}$$

At resonance, $\text{Im}(\mathbf{Z}_{in}) = 0$, i.e.

$$0 = \omega L(1 - \omega^2 LC) - \omega R^2 C$$

$$\omega^2 LC = L - R^2 C$$

$$\omega_0 = \sqrt{\frac{L - R^2 C}{LC}} = \underline{\sqrt{\frac{\mathbf{1}}{\mathbf{C}} - \frac{\mathbf{R^2}}{\mathbf{L}}}}$$

(b) $\mathbf{Z}_{in} = j\omega L \,||\, (R + 1/j\omega C)$

$$\mathbf{Z}_{in} = \frac{j\omega L\,(R + 1/j\omega C)}{R + j\omega L + 1/j\omega C} = \frac{j\omega L\,(1 + j\omega RC)}{(1 - \omega^2 LC) + j\omega RC}$$

$$\mathbf{Z}_{in} = \frac{(-\omega^2 RLC + j\omega L)[(1 - \omega^2 LC) - j\omega RC]}{(1 - \omega^2 LC)^2 + \omega^2 R^2 C^2}$$

At resonance, $\text{Im}(\mathbf{Z}_{in}) = 0$, i.e.

$$0 = \omega L\,(1 - \omega^2 LC) + \omega^3 R^2 C^2 L$$

$$\omega^2 (LC - R^2C^2) = 1$$

$$\omega_0 = \underline{\mathbf{\frac{1}{\sqrt{LC - R^2C^2}}}}$$

(c) $\mathbf{Z}_{in} = R \,||\, (j\omega L + 1/j\omega C)$

$$\mathbf{Z}_{in} = \frac{R\,(j\omega L + 1/j\omega C)}{R + j\omega L + 1/j\omega C} = \frac{R\,(1 - \omega^2 LC)}{(1 - \omega^2 LC) + j\omega RC}$$

$$\mathbf{Z}_{in} = \frac{R\,(1 - \omega^2 LC)[(1 - \omega^2 LC) - j\omega RC]}{(1 - \omega^2 LC)^2 + \omega^2 R^2 C^2}$$

At resonance, $\text{Im}(\mathbf{Z}_{in}) = 0$, i.e.

$$0 = R\,(1 - \omega^2 LC)\,\omega RC$$

$$1 - \omega^2 LC = 0$$

$$\omega_0 = \underline{\mathbf{\frac{1}{\sqrt{LC}}}}$$

Chapter 14, Solution 43.

Consider the circuit below.

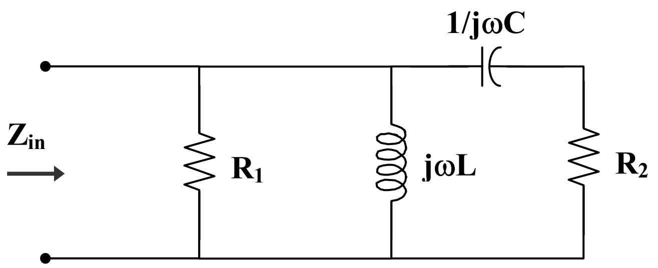

(a) $\mathbf{Z}_{in} = (R_1 \,||\, j\omega L) \,||\, (R_2 + 1/j\omega C)$

$$\mathbf{Z}_{in} = \left(\frac{R_1 j\omega L}{R_1 + j\omega L}\right) || \left(R_2 + \frac{1}{j\omega C}\right)$$

$$\mathbf{Z}_{in} = \frac{\dfrac{j\omega R_1 L}{R_1 + j\omega L} \cdot \left(R_2 + \dfrac{1}{j\omega C} \right)}{R_2 + \dfrac{1}{j\omega C} + \dfrac{jR_1 \omega L}{R_1 + j\omega L}}$$

$$\mathbf{Z}_{in} = \frac{j\omega R_1 L (1 + j\omega R_2 C)}{(R_1 + j\omega L)(1 + j\omega R_2 C) - \omega^2 LCR_1}$$

$$\mathbf{Z}_{in} = \frac{-\omega^2 R_1 R_2 LC + j\omega R_1 L}{R_1 - \omega^2 LCR_1 - \omega^2 LCR_2 + j\omega(L + R_1 R_2 C)}$$

$$\mathbf{Z}_{in} = \frac{(-\omega^2 R_1 R_2 LC + j\omega R_1 L)[R_1 - \omega^2 LCR_1 - \omega^2 LCR_2 - j\omega(L + R_1 R_2 C)]}{(R_1 - \omega^2 LCR_1 - \omega^2 LCR_2)^2 + \omega^2 (L + R_1 R_2 C)^2}$$

At resonance, $\mathrm{Im}(\mathbf{Z}_{in}) = 0$, i.e.

$$0 = \omega^3 R_1 R_2 LC (L + R_1 R_2 C) + \omega R_1 L (R_1 - \omega^2 LCR_1 - \omega^2 LCR_2)$$

$$0 = \omega^3 R_1^2 R_2^2 LC^2 + R_1^2 \omega L - \omega^3 R_1^2 L^2 C$$

$$0 = \omega^2 R_2^2 C^2 + 1 - \omega^2 LC$$

$$\omega^2 (LC - R_2^2 C^2) = 1$$

$$\omega_0 = \frac{1}{\sqrt{LC - R_2^2 C^2}}$$

$$\omega_0 = \frac{1}{\sqrt{(0.02)(9 \times 10^{-6}) - (0.1)^2 (9 \times 10^{-6})^2}}$$

$$\omega_0 = \underline{\mathbf{2.357\ krad/s}}$$

(b) At $\omega = \omega_0 = 2.357$ krad/s,

$$j\omega L = j(2.357 \times 10^3)(20 \times 10^{-3}) = j47.14$$

$$R_1 \parallel j\omega L = \frac{j47.14}{1 + j47.14} = 0.9996 + j0.0212$$

$$R_2 + \frac{1}{j\omega C} = 0.1 + \frac{1}{j(2.357 \times 10^3)(9 \times 10^{-6})} = 0.1 - j47.14$$

$$\mathbf{Z}_{in}(\omega_0) = (R_1 \parallel j\omega L) \parallel (R_2 + 1/j\omega C)$$

$$\mathbf{Z}_{in}(\omega_0) = \frac{(0.9996 + j0.0212)(0.1 - j47.14)}{(0.9996 + j0.0212) + (0.1 - j47.14)}$$

$$\mathbf{Z}_{in}(\omega_0) = \underline{\mathbf{1\,\Omega}}$$

Chapter 14, Solution 44.

We find the input impedance of the circuit shown below.

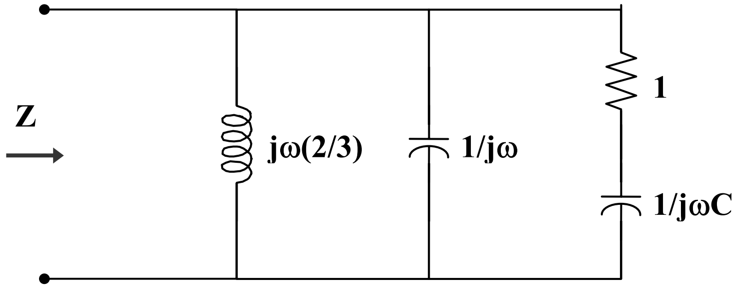

$$\frac{1}{\mathbf{Z}} = \frac{3}{j\omega 2} + j\omega + \frac{1}{1 + 1/j\omega C}, \qquad \omega = 1$$

$$\frac{1}{\mathbf{Z}} = \text{-}j1.5 + j + \frac{jC}{1 + jC} = \text{-}j0.5 + \frac{C^2 + jC}{1 + C^2}$$

$v(t)$ and $i(t)$ are in phase when **Z** is purely real, i.e.

$$0 = \text{-}0.5 + \frac{C}{1 + C^2} \longrightarrow (C - 1)^2 = 1 \qquad \text{or} \qquad C = \underline{\mathbf{1\,F}}$$

$$\frac{1}{\mathbf{Z}} = \frac{C^2}{1 + C^2} = \frac{1}{2} \longrightarrow \mathbf{Z} = 2\,\Omega$$

$$\mathbf{V} = \mathbf{Z}\mathbf{I} = (2)(10) = 20$$

$$v(t) = 20\sin(t)\ \text{V}, \qquad \text{i.e.} \qquad V_o = \underline{\mathbf{20\ V}}$$

Chapter 14, Solution 45.

(a) $1 \| j\omega = \dfrac{j\omega}{1+j\omega}$, $\quad 1 \| \dfrac{1}{j\omega} = \dfrac{1/j\omega}{1+1/j\omega} = \dfrac{1}{1+j\omega}$

Transform the current source gives the circuit below.

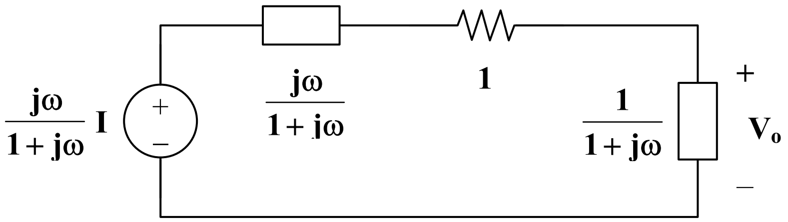

$$\mathbf{V}_o = \frac{\dfrac{1}{1+j\omega}}{1+\dfrac{1}{1+j\omega}+\dfrac{j\omega}{1+j\omega}} \cdot \frac{j\omega}{1+j\omega}\mathbf{I}$$

$$\mathbf{H}(\omega) = \frac{\mathbf{V}_o}{\mathbf{I}} = \underline{\frac{\mathbf{j\omega}}{\mathbf{2(1+j\omega)^2}}}$$

(b) $\mathbf{H}(1) = \dfrac{1}{2(1+j)^2}$

$$|\mathbf{H}(1)| = \frac{1}{2(\sqrt{2})^2} = \underline{\mathbf{0.25}}$$

Chapter 14, Solution 46.

(a) This is an RLC series circuit.

$$\omega_o = \frac{1}{\sqrt{LC}} \longrightarrow C = \frac{1}{\omega_o^2 L} = \frac{1}{(2\pi x15x10^3)^2 x10x10^{-3}} = \underline{11.26nF}$$

(b) $Z = R,\ I = V/Z = 120/20 = \underline{\mathbf{6\ A}}$

(c) $Q = \dfrac{\omega_o L}{R} = \dfrac{2\pi x15x10^3 x10x10^{-3}}{20} = 15\pi = \underline{47.12}$

Chapter 14, Solution 47.

$$\mathbf{H}(\omega) = \frac{\mathbf{V}_o}{\mathbf{V}_i} = \frac{R}{R + j\omega L} = \frac{1}{1 + j\omega L/R}$$

$H(0) = 1$ and $H(\infty) = 0$ showing that this circuit is a lowpass filter.

At the corner frequency, $\left|H(\omega_c)\right| = \frac{1}{\sqrt{2}}$, i.e.

$$\frac{1}{\sqrt{2}} = \frac{1}{\sqrt{1 + \left(\frac{\omega_c L}{R}\right)^2}} \longrightarrow 1 = \frac{\omega_c L}{R} \qquad \text{or} \qquad \omega_c = \frac{R}{L}$$

Hence,

$$\omega_c = \frac{R}{L} = 2\pi f_c$$

$$f_c = \frac{1}{2\pi} \cdot \frac{R}{L} = \frac{1}{2\pi} \cdot \frac{10 \times 10^3}{2 \times 10^{-3}} = \underline{\mathbf{796\ kHz}}$$

Chapter 14, Solution 48.

$$\mathbf{H}(\omega) = \frac{R \,||\, \frac{1}{j\omega C}}{j\omega L + R \,||\, \frac{1}{j\omega C}}$$

$$\mathbf{H}(\omega) = \frac{\frac{R/j\omega C}{R + 1/j\omega C}}{j\omega L + \frac{R/j\omega C}{R + 1/j\omega C}}$$

$$\underline{\mathbf{H}(\omega) = \frac{\mathbf{R}}{\mathbf{R + j\omega L - \omega^2 RLC}}}$$

$H(0) = 1$ and $H(\infty) = 0$ showing that **<u>this circuit is a lowpass filter</u>**.

Chapter 14, Solution 49.

$$\text{At dc, } H(0) = \frac{4}{2} = 2.$$

Hence, $$\left| H(\omega) \right| = \frac{1}{\sqrt{2}} H(0) = \frac{2}{\sqrt{2}}$$

$$\frac{2}{\sqrt{2}} = \frac{4}{\sqrt{4 + 100\omega_c^2}}$$

$$4 + 100\omega_c^2 = 8 \longrightarrow \omega_c = 0.2$$

$$H(2) = \frac{4}{2 + j20} = \frac{2}{1 + j10}$$

$$\left| H(2) \right| = \frac{2}{\sqrt{101}} = 0.199$$

$$\text{In dB, } 20\log_{10}\left| H(2) \right| = \underline{\mathbf{-14.023}}$$

$$\arg H(2) = -\tan^{-1} 10 = \underline{\mathbf{-84.3°}}$$

Chapter 14, Solution 50.

$$\mathbf{H}(\omega) = \frac{\mathbf{V}_o}{\mathbf{V}_i} = \frac{j\omega L}{R + j\omega L}$$

$H(0) = 0$ and $H(\infty) = 1$ showing that **<u>this circuit is a highpass filter</u>**.

$$\mathbf{H}(\omega_c) = \frac{1}{\sqrt{2}} = \frac{1}{\sqrt{1 + \left(\frac{R}{\omega_c L}\right)^2}} \longrightarrow 1 = \frac{R}{\omega_c L}$$

or $$\omega_c = \frac{R}{L} = 2\pi f_c$$

$$f_c = \frac{1}{2\pi} \cdot \frac{R}{L} = \frac{1}{2\pi} \cdot \frac{200}{0.1} = \underline{\mathbf{318.3\ Hz}}$$

Chapter 14, Solution 51.

$$\mathbf{H}'(\omega) = \frac{j\omega RC}{1 + j\omega RC} = \frac{j\omega}{j\omega + 1/RC} \qquad \text{(from Eq. 14.52)}$$

This has a unity passband gain, i.e. $H(\infty) = 1$.

$$\frac{1}{RC} = \omega_c = 50$$

$$\mathbf{H}^{\wedge}(\omega) = 10\,\mathbf{H}'(\omega) = \frac{j10\omega}{50 + j\omega}$$

$$\mathbf{H}(\omega) = \underline{\boldsymbol{\frac{j10\omega}{50 + j\omega}}}$$

Chapter 14, Problem 52.

Design an *RL* lowpass filter that uses a 40-mH coil and has a cut-off frequency of 5 kHz.

Chapter 14, Solution 53.

$$\omega_c = \frac{R}{L} = 2\pi f_c$$

$$R = 2\pi f_c L = (2\pi)(10^5)(40 \times 10^{-3}) = \underline{\mathbf{25.13\ k\Omega}}$$

Chapter 14, Solution 54.

$$\omega_1 = 2\pi f_1 = 20\pi \times 10^3$$
$$\omega_2 = 2\pi f_2 = 22\pi \times 10^3$$

$$B = \omega_2 - \omega_1 = 2\pi \times 10^3$$

$$\omega_0 = \frac{\omega_2 + \omega_1}{2} = 21\pi \times 10^3$$

$$Q = \frac{\omega_0}{B} = \frac{21\pi}{2\pi} = \underline{11.5}$$

$$\omega_0 = \frac{1}{\sqrt{LC}} \longrightarrow L = \frac{1}{\omega_0^2 C}$$

$$L = \frac{1}{(21\pi \times 10^3)^2 (80 \times 10^{-12})} = \underline{\mathbf{2.872\ H}}$$

$$B = \frac{R}{L} \longrightarrow R = BL$$

$$R = (2\pi \times 10^3)(2.872) = \underline{\mathbf{18.045\ k\Omega}}$$

Chapter 14, Solution 55.

$$\omega_c = 2\pi f_c = \frac{1}{RC} \longrightarrow R = \frac{1}{2\pi f_c C} = \frac{1}{2\pi x 2x10^3 x300x10^{-12}} = \underline{265.3k\Omega}$$

Chapter 14, Solution 56.

$$\omega_o = \frac{1}{\sqrt{LC}} = \frac{1}{\sqrt{(25 \times 10^{-3})(0.4 \times 10^{-6})}} = 10\ \text{krad/s}$$

$$B = \frac{R}{L} = \frac{10}{25 \times 10^{-3}} = 0.4\ \text{krad/s}$$

$$Q = \frac{10}{0.4} = \underline{\mathbf{25}}$$

$$\omega_1 = \omega_o - B/2 = 10 - 0.2 = 9.8\ \text{krad/s} \qquad \text{or} \qquad f_1 = \frac{9.8}{2\pi} = 1.56\ \text{kHz}$$

$$\omega_2 = \omega_o + B/2 = 10 + 0.2 = 10.2\ \text{krad/s} \qquad \text{or} \qquad f_2 = \frac{10.2}{2\pi} = 1.62\ \text{kHz}$$

Therefore,

$$\underline{\mathbf{1.56\ kHz < f < 1.62\ kHz}}$$

Chapter 14, Solution 57.

(a) From Eq 14.54,

$$\mathbf{H}(s) = \frac{R}{R + sL + \frac{1}{sC}} = \frac{sRC}{1 + sRC + s^2LC} = \frac{s\frac{R}{L}}{s^2 + s\frac{R}{L} + \frac{1}{LC}}$$

Since $B = \frac{R}{L}$ and $\omega_0 = \frac{1}{\sqrt{LC}}$,

$$\mathbf{H}(s) = \underline{\frac{\mathbf{sB}}{\mathbf{s^2 + sB + \omega_0^2}}}$$

(b) From Eq. 14.56,

$$\mathbf{H}(s) = \frac{sL + \frac{1}{sC}}{R + sL + \frac{1}{sC}} = \frac{s^2 + \frac{1}{LC}}{s^2 + s\frac{R}{L} + \frac{1}{LC}}$$

$$\mathbf{H}(s) = \underline{\frac{\mathbf{s^2 + \omega_0^2}}{\mathbf{s^2 + sB + \omega_0^2}}}$$

Chapter 14, Solution 58.

(a) Consider the circuit below.

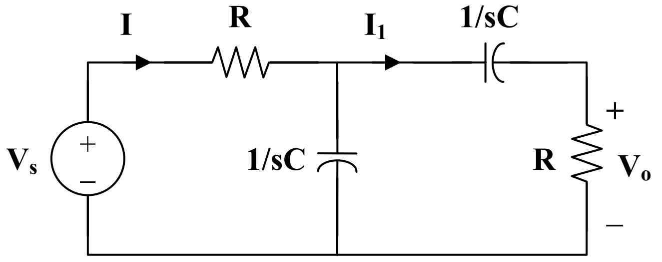

$$\mathbf{Z}(s) = R + \frac{1}{sC} \parallel \left(R + \frac{1}{sC}\right) = R + \frac{\frac{1}{sC}\left(R + \frac{1}{sC}\right)}{R + \frac{2}{sC}}$$

$$\mathbf{Z}(s) = R + \frac{1 + sRC}{sC(2 + sRC)}$$

$$\mathbf{Z}(s) = \frac{1 + 3sRC + s^2R^2C^2}{sC(2 + sRC)}$$

$$\mathbf{I} = \frac{\mathbf{V}_s}{\mathbf{Z}}$$

$$\mathbf{I}_1 = \frac{1/sC}{2/sC + R}\mathbf{I} = \frac{\mathbf{V}_s}{\mathbf{Z}(2 + sRC)}$$

$$\mathbf{V}_o = \mathbf{I}_1 R = \frac{R\,\mathbf{V}_s}{2 + sRC} \cdot \frac{sC(2 + sRC)}{1 + 3sRC + s^2R^2C^2}$$

$$\mathbf{H}(s) = \frac{\mathbf{V}_o}{\mathbf{V}_s} = \frac{sRC}{1 + 3sRC + s^2R^2C^2}$$

$$\mathbf{H}(s) = \frac{1}{3}\left[\frac{\frac{3}{RC}s}{s^2 + \frac{3}{RC}s + \frac{1}{R^2C^2}}\right]$$

Thus, $\omega_0^2 = \frac{1}{R^2C^2}$ or $\omega_0 = \frac{1}{RC} = \underline{\mathbf{1\ rad/s}}$

$$B = \frac{3}{RC} = \underline{\mathbf{3\ rad/s}}$$

(b) Similarly,

$$\mathbf{Z}(s) = sL + R \parallel (R + sL) = sL + \frac{R(R + sL)}{2R + sL}$$

$$\mathbf{Z}(s) = \frac{R^2 + 3sRL + s^2L^2}{2R + sL}$$

$$\mathbf{I} = \frac{\mathbf{V}_s}{\mathbf{Z}}, \qquad \mathbf{I}_1 = \frac{R}{2R + sL}\mathbf{I} = \frac{R\,\mathbf{V}_s}{\mathbf{Z}(2R + sL)}$$

$$\mathbf{V}_o = \mathbf{I}_1 \cdot sL = \frac{sLR\,\mathbf{V}_s}{2R + sL} \cdot \frac{2R + sL}{R^2 + 3sRL + s^2L^2}$$

$$\mathbf{H}(s) = \frac{\mathbf{V}_o}{\mathbf{V}_s} = \frac{sRL}{R^2 + 3sRL + s^2L^2} = \frac{\frac{1}{3}\left(\frac{3R}{L}s\right)}{s^2 + \frac{3R}{L}s + \frac{R^2}{L^2}}$$

Thus, $\omega_0 = \frac{R}{L} = \underline{\mathbf{1\ rad/s}}$

$$B = \frac{3R}{L} = \underline{\mathbf{3\ rad/s}}$$

Chapter 14, Solution 59.

(a) $\omega_0 = \frac{1}{\sqrt{LC}} = \frac{1}{\sqrt{(0.1)(40 \times 10^{-12})}} = \underline{\mathbf{0.5 \times 10^6\ rad/s}}$

(b) $B = \frac{R}{L} = \frac{2 \times 10^3}{0.1} = 2 \times 10^4$

$$Q = \frac{\omega_0}{B} = \frac{0.5 \times 10^6}{2 \times 10^4} = 250$$

As a high Q circuit,

$$\omega_1 = \omega_0 - \frac{B}{2} = 10^4 (50 - 1) = \underline{\mathbf{490\ krad/s}}$$

$$\omega_2 = \omega_0 + \frac{B}{2} = 10^4 (50 + 1) = \underline{\mathbf{510\ krad/s}}$$

(c) As seen in part (b), $Q = \underline{\mathbf{250}}$

Chapter 14, Solution 60.

Consider the circuit below.

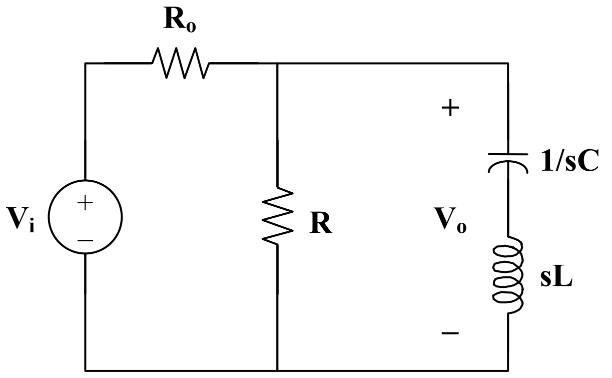

$$\mathbf{Z}(s) = R \,||\, \left(sL + \frac{1}{sC} \right) = \frac{R\,(sL + 1/sC)}{R + sL + 1/sC}$$

$$\mathbf{Z}(s) = \frac{R\,(1 + s^2LC)}{1 + sRC + s^2LC}$$

$$\mathbf{H} = \frac{\mathbf{V}_o}{\mathbf{V}_i} = \frac{\mathbf{Z}}{\mathbf{Z} + R_o} = \frac{R\,(1 + s^2LC)}{R_o + sRR_oC + s^2LCR_o + R + s^2LCR}$$

$$\mathbf{Z}_{in} = R_o + \mathbf{Z} = R_o + \frac{R\,(1 + s^2LC)}{1 + sRC + s^2LC}$$

$$\mathbf{Z}_{in} = \frac{R_o + sRR_oC + s^2LCR_o + R + s^2LCR}{1 + sRC + s^2LC}$$

$s = j\omega$

$$\mathbf{Z}_{in} = \frac{R_o + j\omega RR_oC - \omega^2 LCR_o + R - \omega^2 LCR}{1 - \omega^2 LC + j\omega RC}$$

$$\mathbf{Z}_{in} = \frac{(R_o + R - \omega^2 LCR_o - \omega^2 LCR + j\omega RR_oC)(1 - \omega^2 LC - j\omega RC)}{(1 - \omega^2 LC)^2 + (\omega RC)^2}$$

$\text{Im}(\mathbf{Z}_{in}) = 0$ implies that

$$-\omega RC[R_o + R - \omega^2 LCR_o - \omega^2 LCR] + \omega RR_oC(1 - \omega^2 LC) = 0$$

$$R_o + R - \omega^2 LCR_o - \omega^2 LCR - R_o + \omega^2 LCR_o = 0$$
$$\omega^2 LCR = R$$

$$\omega_0 = \frac{1}{\sqrt{LC}} = \frac{1}{\sqrt{(1\times 10^{-3})(4\times 10^{-6})}} = \underline{\mathbf{15.811\ krad/s}}$$

$$\mathbf{H} = \frac{R(1-\omega^2 LC)}{R_o + j\omega RR_oC + R - \omega^2 LCR_o - \omega^2 LCR}$$

$$H_{max} = H(0) = \frac{R}{R_o + R}$$

or $$H_{max} = H(\infty) = \lim_{\omega\to\infty} \frac{R\left(\frac{1}{\omega^2} - LC\right)}{\frac{R_o + R}{\omega^2} + j\frac{RR_oC}{\omega} - LC(R + R_o)} = \frac{R}{R + R_o}$$

At ω_1 and ω_2, $|\mathbf{H}| = \frac{1}{\sqrt{2}} H_{mzx}$

$$\frac{R}{\sqrt{2}(R_o + R)} = \left|\frac{R(1-\omega^2 LC)}{R_o + R - \omega^2 LC(R_o + R) + j\omega RR_oC}\right|$$

$$\frac{1}{\sqrt{2}} = \frac{(R_o + R)(1-\omega^2 LC)}{\sqrt{(\omega RR_oC)^2 + (R_o + R - \omega^2 LC(R_o + R))^2}}$$

$$\frac{1}{\sqrt{2}} = \frac{10(1-\omega^2 \cdot 4\times 10^{-9})}{\sqrt{(96\times 10^{-6}\omega)^2 + (10 - \omega^2 \cdot 4\times 10^{-8})^2}}$$

$$0 = \frac{10(1-\omega^2 \cdot 4\times 10^{-9})}{\sqrt{(96\times 10^{-6}\omega)^2 + (10 - \omega^2 \cdot 4\times 10^{-8})^2}} - \frac{1}{\sqrt{2}}$$

$$(10 - \omega^2 \cdot 4\times 10^{-8})(\sqrt{2}) - \sqrt{(96\times 10^{-6}\omega)^2 + (10 - \omega^2 \cdot 4\times 10^{-8})^2} = 0$$

$$(2)(10 - \omega^2 \cdot 4\times 10^{-8})^2 = (96\times 10^{-6}\omega)^2 + (10 - \omega^2 \cdot 4\times 10^{-8})^2$$

$$(96\times 10^{-6}\omega)^2 - (10 - \omega^2 \cdot 4\times 10^{-8})^2 = 0$$

$$1.6\times 10^{-15}\omega^4 - 8.092\times 10^{-7}\omega^2 + 100 = 0$$

$$\omega^4 - 5.058\times10^8 + 6.25\times10^{16} = 0$$

$$\omega^2 = \begin{cases} 2.9109\times10^8 \\ 2.1471\times10^8 \end{cases}$$

Hence,

$$\omega_1 = 14.653 \text{ krad/s}$$

$$\omega_2 = 17.061 \text{ krad/s}$$

$$B = \omega_2 - \omega_1 = 17.061 - 14.653 = \underline{\mathbf{2.408\ krad/s}}$$

Chapter 14, Solution 61.

(a) $$\mathbf{V}_+ = \frac{1/j\omega C}{R + 1/j\omega C}\mathbf{V}_i, \qquad \mathbf{V}_- = \mathbf{V}_o$$

Since $\mathbf{V}_+ = \mathbf{V}_-$,

$$\frac{1}{1 + j\omega RC}\mathbf{V}_i = \mathbf{V}_o$$

$$\mathbf{H}(\omega) = \frac{\mathbf{V}_o}{\mathbf{V}_i} = \underline{\frac{\mathbf{1}}{\mathbf{1 + j\omega RC}}}$$

(b) $$\mathbf{V}_+ = \frac{R}{R + 1/j\omega C}\mathbf{V}_i, \qquad \mathbf{V}_- = \mathbf{V}_o$$

Since $\mathbf{V}_+ = \mathbf{V}_-$,

$$\frac{j\omega RC}{1 + j\omega RC}\mathbf{V}_i = \mathbf{V}_o$$

$$\mathbf{H}(\omega) = \frac{\mathbf{V}_o}{\mathbf{V}_i} = \underline{\frac{\mathbf{j\omega RC}}{\mathbf{1 + j\omega RC}}}$$

Chapter 14, Solution 62.

This is a highpass filter.

$$\mathbf{H}(\omega) = \frac{j\omega RC}{1 + j\omega RC} = \frac{1}{1 - j/\omega RC}$$

$$\mathbf{H}(\omega) = \frac{1}{1 - j\omega_c/\omega}, \qquad \omega_c = \frac{1}{RC} = 2\pi(1000)$$

$$\mathbf{H}(\omega) = \frac{1}{1 - jf_c/f} = \frac{1}{1 - j1000/f}$$

(a) $$\mathbf{H}(f = 200\ \text{Hz}) = \frac{1}{1 - j5} = \frac{\mathbf{V}_o}{\mathbf{V}_i}$$

$$|\mathbf{V}_o| = \frac{120\ \text{mV}}{|1 - j5|} = \underline{\mathbf{23.53\ mV}}$$

(b) $$\mathbf{H}(f = 2\ \text{kHz}) = \frac{1}{1 - j0.5} = \frac{\mathbf{V}_o}{\mathbf{V}_i}$$

$$|\mathbf{V}_o| = \frac{120\ \text{mV}}{|1 - j0.5|} = \underline{\mathbf{107.3\ mV}}$$

(c) $$\mathbf{H}(f = 10\ \text{kHz}) = \frac{1}{1 - j0.1} = \frac{\mathbf{V}_o}{\mathbf{V}_i}$$

$$|\mathbf{V}_o| = \frac{120\ \text{mV}}{|1 - j0.1|} = \underline{\mathbf{119.4\ mV}}$$

Chapter 14, Solution 63.

For an active highpass filter,

$$H(s) = -\frac{sC_iR_f}{1 + sC_iR_i} \qquad (1)$$

But

$$H(s) = -\frac{10s}{1+s/10} \qquad (2)$$

Comparing (1) and (2) leads to:

$$C_i R_f = 10 \longrightarrow R_f = \frac{10}{C_i} = \underline{10M\Omega}$$

$$C_i R_i = 0.1 \longrightarrow R_i = \frac{0.1}{C_i} = \underline{100k\Omega}$$

Chapter 14, Solution 64.

$$Z_f = R_f \parallel \frac{1}{j\omega C_f} = \frac{R_f}{1+j\omega R_f C_f}$$

$$Z_i = R_i + \frac{1}{j\omega C_i} = \frac{1+j\omega R_i C_i}{j\omega C_i}$$

Hence,

$$\mathbf{H}(\omega) = \frac{\mathbf{V}_o}{\mathbf{V}_i} = \frac{-\mathbf{Z}_f}{\mathbf{Z}_i} = \underline{\frac{-\mathbf{j\omega R_f C_i}}{(\mathbf{1+j\omega R_f C_f})(\mathbf{1+j\omega R_i C_i})}}$$

<u>This is a bandpass filter</u>. $\mathbf{H}(\omega)$ is similar to the product of the transfer function of a lowpass filter and a highpass filter.

Chapter 14, Solution 65.

$$\mathbf{V}_+ = \frac{R}{R+1/j\omega C}\mathbf{V}_i = \frac{j\omega RC}{1+j\omega RC}\mathbf{V}_i$$

$$\mathbf{V}_- = \frac{R_i}{R_i + R_f}\mathbf{V}_o$$

Since $\mathbf{V}_+ = \mathbf{V}_-$,

$$\frac{R_i}{R_i + R_f}\mathbf{V}_o = \frac{j\omega RC}{1 + j\omega RC}\mathbf{V}_i$$

$$\mathbf{H}(\omega) = \frac{\mathbf{V}_o}{\mathbf{V}_i} = \underline{\left(\mathbf{1} + \frac{\mathbf{R_f}}{\mathbf{R_i}}\right)\left(\frac{\mathbf{j\omega RC}}{\mathbf{1 + j\omega RC}}\right)}$$

It is evident that as $\omega \rightarrow \infty$, the gain is $\underline{\mathbf{1} + \frac{\mathbf{R_f}}{\mathbf{R_i}}}$ and that the corner frequency is $\underline{\frac{\mathbf{1}}{\mathbf{RC}}}$.

Chapter 14, Solution 66.

(a) **<u>Proof</u>**

(b) When $\underline{\mathbf{R_1R_4 = R_2R_3}}$,

$$\mathbf{H}(s) = \frac{R_4}{R_3 + R_4} \cdot \frac{s}{s + 1/R_2C}$$

(c) When $\underline{\mathbf{R_3} \rightarrow \infty}$,

$$\mathbf{H}(s) = \frac{-1/R_1C}{s + 1/R_2C}$$

Chapter 14, Solution 67.

$$\text{DC gain} = \frac{R_f}{R_i} = \frac{1}{4} \longrightarrow R_i = 4R_f$$

$$\text{Corner frequency} = \omega_c = \frac{1}{R_fC_f} = 2\pi(500)\ \text{rad/s}$$

If we select $R_f = 20\ \text{k}\Omega$, then $R_i = 80\ \text{k}\Omega$ and

$$C = \frac{1}{(2\pi)(500)(20\times10^3)} = 15.915\ \text{nF}$$

Therefore, if $R_f = \underline{\mathbf{20\ k\Omega}}$, then $R_i = \underline{\mathbf{80\ k\Omega}}$ and $C = \underline{\mathbf{15.915\ nF}}$

Chapter 14, Solution 68.

$$\text{High frequency gain} = 5 = \frac{R_f}{R_i} \longrightarrow R_f = 5R_i$$

$$\text{Corner frequency} = \omega_c = \frac{1}{R_i C_i} = 2\pi(200)\ \text{rad/s}$$

If we select $R_i = 20\ \text{k}\Omega$, then $R_f = 100\ \text{k}\Omega$ and

$$C = \frac{1}{(2\pi)(200)(20\times10^3)} = 39.8\ \text{nF}$$

Therefore, if $R_i = \underline{\mathbf{20\ k\Omega}}$, then $R_f = \underline{\mathbf{100\ k\Omega}}$ and $C = \underline{\mathbf{39.8\ nF}}$

Chapter 14, Solution 69.

This is a highpass filter with $f_c = 2$ kHz.

$$\omega_c = 2\pi f_c = \frac{1}{RC}$$

$$RC = \frac{1}{2\pi f_c} = \frac{1}{4\pi\times10^3}$$

10^8 Hz may be regarded as high frequency. Hence the high-frequency gain is

$$\frac{-R_f}{R} = \frac{-10}{4} \qquad \text{or} \qquad R_f = 2.5R$$

If we let $R = \underline{\mathbf{10\ k\Omega}}$, then $R_f = \underline{\mathbf{25\ k\Omega}}$, and $C = \frac{1}{4000\pi\times10^4} = \underline{\mathbf{7.96\ nF}}$.

Chapter 14, Solution 70.

(a) $$\mathbf{H}(s) = \frac{\mathbf{V}_o(s)}{\mathbf{V}_i(s)} = \frac{Y_1 Y_2}{Y_1 Y_2 + Y_4 (Y_1 + Y_2 + Y_3)}$$

where $Y_1 = \frac{1}{R_1} = G_1,\ Y_2 = \frac{1}{R_2} = G_2,\ Y_3 = sC_1,\ Y_4 = sC_2$.

$$\mathbf{H}(s) = \underline{\frac{\mathbf{G_1 G_2}}{\mathbf{G_1 G_2 + sC_2 (G_1 + G_2 + sC_1)}}}$$

(b) $$H(0) = \frac{G_1 G_2}{G_1 G_2} = 1, \qquad H(\infty) = 0$$

showing that **this circuit is a lowpass filter**.

Chapter 14, Solution 71.

$R = 50\ \Omega,\ L = 40\ \text{mH},\ C = 1\ \mu\text{F}$

$$L' = \frac{K_m}{K_f} L \longrightarrow 1 = \frac{K_m}{K_f} \cdot (40 \times 10^{-3})$$

$$25 K_f = K_m \qquad (1)$$

$$C' = \frac{C}{K_m K_f} \longrightarrow 1 = \frac{10^{-6}}{K_m K_f}$$

$$10^6 K_f = \frac{1}{K_m} \qquad (2)$$

Substituting (1) into (2),

$$10^6 K_f = \frac{1}{25 K_f}$$

$$K_f = \underline{\mathbf{0.2 \times 10^{-3}}}$$

$$K_m = 25 K_f = \underline{\mathbf{5 \times 10^{-3}}}$$

Chapter 14, Solution 72.

$$L'C' = \frac{LC}{K_f^2} \longrightarrow K_f^2 = \frac{LC}{L'C'}$$

$$K_f^2 = \frac{(4\times10^{-3})(20\times10^{-6})}{(1)(2)} = 4\times10^{-8}$$

$$K_f = \underline{\mathbf{2\times10^{-4}}}$$

$$\frac{L'}{C'} = \frac{L}{C}K_m^2 \longrightarrow K_m^2 = \frac{L'}{C'}\cdot\frac{C}{L}$$

$$K_m^2 = \frac{(1)(20\times10^{-6})}{(2)(4\times10^{-3})} = 2.5\times10^{-3}$$

$$K_m = \underline{\mathbf{5\times10^{-2}}}$$

Chapter 14, Solution 73.

$$R' = K_m R = (12)(800\times10^3) = \underline{\mathbf{9.6\ M\Omega}}$$

$$L' = \frac{K_m}{K_f}L = \frac{800}{1000}(40\times10^{-6}) = \underline{\mathbf{32\ \mu F}}$$

$$C' = \frac{C}{K_m K_f} = \frac{300\times10^{-9}}{(800)(1000)} = \underline{\mathbf{0.375\ pF}}$$

Chapter 14, Solution 74.

$$R'_1 = K_m R_1 = 3\text{x}100 = \underline{300\Omega}$$

$$R'_2 = K_m R_2 = 10\text{x}100 = \underline{1\,k\Omega}$$

$$L' = \frac{K_m}{K_f}L = \frac{10^2}{10^6}(2) = \underline{200\ \mu H}$$

$$C' = \frac{C}{K_m K_f} = \frac{\frac{1}{10}}{10^8} = \underline{1\,nF}$$

Chapter 14, Solution 75.

$$R' = K_m R = 20x10 = \underline{200\,\Omega}$$

$$L' = \frac{K_m}{K_f} L = \frac{10}{10^5}(4) = \underline{400\,\mu H}$$

$$C' = \frac{C}{K_m K_f} = \frac{1}{10x10^5} = \underline{1\,\mu F}$$

Chapter 14, Solution 76.

$$R' = K_m R = 50x10^3 \longrightarrow R = \frac{50x10^3}{10^3} = \underline{50\,\Omega}$$

$$L' = \frac{K_m}{K_f} L = 10\,\mu H \longrightarrow L = 10x10^{-6} x \frac{10^6}{10^3} = \underline{10\,mH}$$

$$C' = 40\,pF = \frac{C}{K_m K_f} \longrightarrow C = 40x10^{-12} x10^3 x10^6 = \underline{40\ mF}$$

Chapter 14, Solution 77.

L and C are needed before scaling.

$$B = \frac{R}{L} \longrightarrow L = \frac{R}{B} = \frac{10}{5} = 2\ H$$

$$\omega_0 = \frac{1}{\sqrt{LC}} \longrightarrow C = \frac{1}{\omega_0^2 L} = \frac{1}{(1600)(2)} = 312.5\ \mu F$$

(a) $L' = K_m L = (600)(2) = \underline{\mathbf{1200\ H}}$

$$C' = \frac{C}{K_m} = \frac{3.125 \times 10^{-4}}{600} = \underline{\mathbf{0.5208\ \mu F}}$$

(b) $L' = \frac{L}{K_f} = \frac{2}{10^3} = \underline{\mathbf{2\ mH}}$

$C' = \frac{C}{K_f} = \frac{3.125 \times 10^{-4}}{10^3} = \underline{\mathbf{312.5\ nF}}$

(c) $L' = \frac{K_m}{K_f} L = \frac{(400)(2)}{10^5} = \underline{\mathbf{8\ mH}}$

$C' = \frac{C}{K_m K_f} = \frac{3.125 \times 10^{-4}}{(400)(10^5)} = \underline{\mathbf{7.81\ pF}}$

Chapter 14, Solution 78.

$R' = K_m R = (1000)(1) = 1\ k\Omega$

$L' = \frac{K_m}{K_f} L = \frac{10^3}{10^4}(1) = 0.1\ H$

$C' = \frac{C}{K_m K_f} = \frac{1}{(10^3)(10^4)} = 0.1\ \mu F$

<u>The new circuit is shown below</u>.

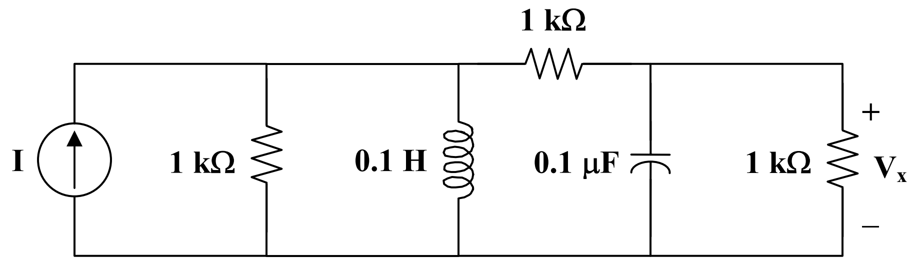

Chapter 14, Solution 79.

(a) Insert a 1-V source at the input terminals.

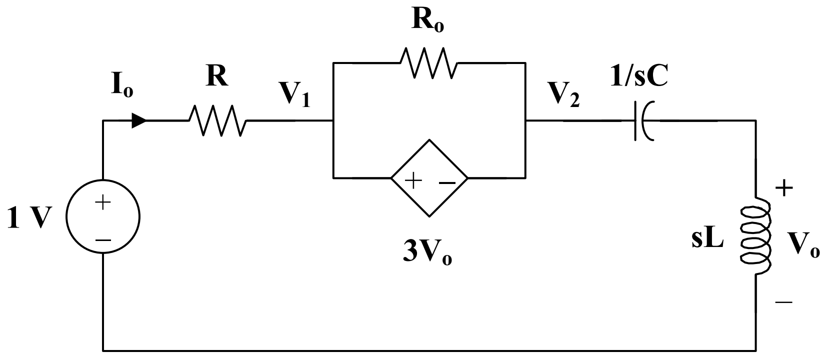

There is a supernode.

$$\frac{1-\mathbf{V}_1}{R} = \frac{\mathbf{V}_2}{sL + 1/sC} \qquad (1)$$

But $\mathbf{V}_1 = \mathbf{V}_2 + 3\mathbf{V}_o \longrightarrow \mathbf{V}_2 = \mathbf{V}_1 - 3\mathbf{V}_o$ (2)

Also, $\mathbf{V}_o = \frac{sL}{sL + 1/sC}\mathbf{V}_2 \longrightarrow \frac{\mathbf{V}_o}{sL} = \frac{\mathbf{V}_2}{sL + 1/sC}$ (3)

Combining (2) and (3)

$$\mathbf{V}_2 = \mathbf{V}_1 - 3\mathbf{V}_o = \frac{sL + 1/sC}{sL}\mathbf{V}_o$$

$$\mathbf{V}_o = \frac{s^2LC}{1 + 4s^2LC}\mathbf{V}_1 \qquad (4)$$

Substituting (3) and (4) into (1) gives

$$\frac{1-\mathbf{V}_1}{R} = \frac{\mathbf{V}_o}{sL} = \frac{sC}{1 + 4s^2LC}\mathbf{V}_1$$

$$1 = \mathbf{V}_1 + \frac{sRC}{1 + 4s^2LC}\mathbf{V}_1 = \frac{1 + 4s^2LC + sRC}{1 + 4s^2LC}\mathbf{V}_1$$

$$\mathbf{V}_1 = \frac{1 + 4s^2LC}{1 + 4s^2LC + sRC}$$

$$\mathbf{I}_o = \frac{1 - \mathbf{V}_1}{R} = \frac{sRC}{R\,(1 + 4s^2LC + sRC)}$$

$$\mathbf{Z}_{in} = \frac{1}{\mathbf{I}_o} = \frac{1 + sRC + 4s^2LC}{sC}$$

$$\mathbf{Z}_{in} = 4sL + R + \frac{1}{sC} \qquad (5)$$

When $R = 5$, $L = 2$, $C = 0.1$,

$$\mathbf{Z}_{in}(s) = \underline{\mathbf{8s + 5 + \frac{10}{s}}}$$

At resonance,

$$\mathrm{Im}(\mathbf{Z}_{in}) = 0 = 4\omega L - \frac{1}{\omega C}$$

or $$\omega_0 = \frac{1}{2\sqrt{LC}} = \frac{1}{2\sqrt{(0.1)(2)}} = \underline{\mathbf{1.118\ rad/s}}$$

(b) After scaling,

$$R' \longrightarrow K_m R$$

$$4\,\Omega \longrightarrow 40\,\Omega$$

$$5\,\Omega \longrightarrow 50\,\Omega$$

$$L' = \frac{K_m}{K_f} L = \frac{10}{100}(2) = 0.2\ \text{H}$$

$$C' = \frac{C}{K_m K_f} = \frac{0.1}{(10)(100)} = 10^{-4}$$

From (5),

$$\mathbf{Z}_{in}(s) = \underline{\mathbf{0.8s + 50 + \frac{10^4}{s}}}$$

$$\omega_0 = \frac{1}{2\sqrt{LC}} = \frac{1}{2\sqrt{(0.2)(10^{-4})}} = \underline{\mathbf{111.8\ rad/s}}$$

Chapter 14, Solution 80.

(a) $R' = K_m R = (200)(2) = 400\ \Omega$

$$L' = \frac{K_m L}{K_f} = \frac{(200)(1)}{10^4} = 20\text{ mH}$$

$$C' = \frac{C}{K_m K_f} = \frac{0.5}{(200)(10^4)} = 0.25\ \mu\text{F}$$

The new circuit is shown below.

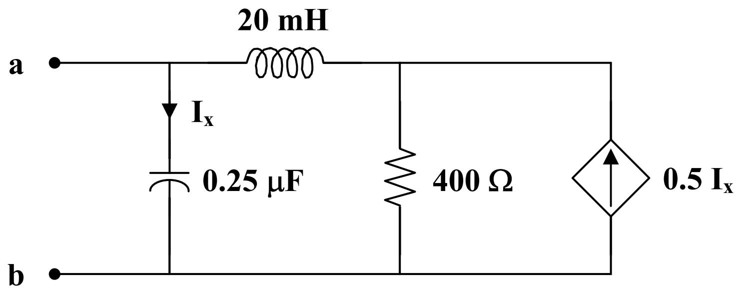

(b) Insert a 1-A source at the terminals a-b.

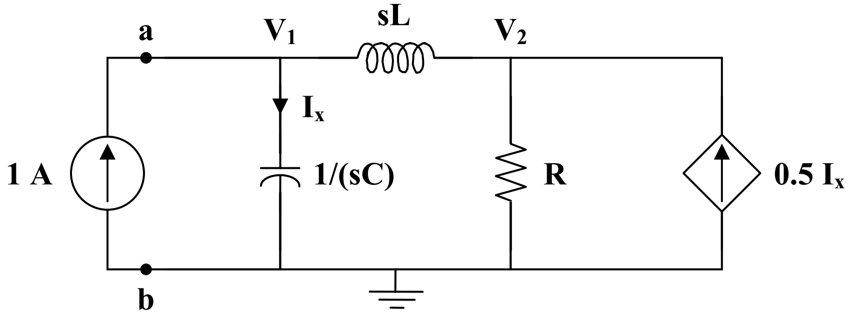

At node 1,

$$1 = sC\mathbf{V}_1 + \frac{\mathbf{V}_1 - \mathbf{V}_2}{sL} \qquad (1)$$

At node 2,

$$\frac{\mathbf{V}_1 - \mathbf{V}_2}{sL} + 0.5\mathbf{I}_x = \frac{\mathbf{V}_2}{R}$$

But, $\mathbf{I}_x = sC\,\mathbf{V}_1$.

$$\frac{\mathbf{V}_1 - \mathbf{V}_2}{sL} + 0.5sC\,\mathbf{V}_1 = \frac{\mathbf{V}_2}{R} \qquad (2)$$

Solving (1) and (2),

$$\mathbf{V}_1 = \frac{sL + R}{s^2LC + 0.5sCR + 1}$$

$$\mathbf{Z}_{Th} = \frac{\mathbf{V}_1}{1} = \frac{sL + R}{s^2LC + 0.5sCR + 1}$$

At $\omega = 10^4$,

$$\mathbf{Z}_{Th} = \frac{(j10^4)(20\times10^{-3}) + 400}{(j10^4)^2(20\times10^{-3})(0.25\times10^{-6}) + 0.5(j10^4)(0.25\times10^{-6})(400) + 1}$$

$$\mathbf{Z}_{Th} = \frac{400 + j200}{0.5 + j0.5} = 600 - j200$$

$$\mathbf{Z}_{Th} = \underline{\mathbf{632.5\angle -18.435^\circ\ ohms}}$$

Chapter 14, Solution 81.

(a)

$$\frac{1}{Z} = G + j\omega C + \frac{1}{R + j\omega L} = \frac{(G + j\omega C)(R + j\omega L) + 1}{R + j\omega L}$$

which leads to $Z = \dfrac{j\omega L + R}{-\omega^2 LC + j\omega(RC + LG) + GR + 1}$

$$Z(\omega) = \frac{j\frac{\omega}{C} + \frac{R}{LC}}{-\omega^2 + j\omega\left(\frac{R}{L} + \frac{G}{C}\right) + \frac{GR + 1}{LC}} \qquad (1)$$

We compare this with the given impedance:

$$Z(\omega) = \frac{1000(j\omega + 1)}{-\omega^2 + 2j\omega + 1 + 2500} \qquad (2)$$

Comparing (1) and (2) shows that

$$\frac{1}{C} = 1000 \longrightarrow C = 1\,\text{mF}, \quad R/L = 1 \longrightarrow R = L$$

$$\frac{R}{L} + \frac{G}{C} = 2 \longrightarrow G = C = 1 \text{ mS}$$

$$2501 = \frac{GR + 1}{LC} = \frac{10^{-3}R + 1}{10^{-3}R} \longrightarrow R = 0.4 = L$$

Thus,

R = **<u>0.4Ω</u>**, L = **<u>0.4 H</u>**, C = **<u>1 mF</u>**, G = **<u>1 mS</u>**

(b) By frequency-scaling, K_f =1000.

R' = **<u>0.4 Ω</u>**, G' = **<u>1 mS</u>**

$$L' = \frac{L}{K_f} = \frac{0.4}{10^3} = \underline{0.4\text{mH}}, \quad C' = \frac{C}{K_f} = \frac{10^{-3}}{10^{-3}} = \underline{1\mu\text{F}}$$

Chapter 14, Solution 82.

$$C' = \frac{C}{K_m K_f}$$

$$K_f = \frac{\omega_c'}{\omega} = \frac{200}{1} = 200$$

$$K_m = \frac{C}{C'} \cdot \frac{1}{K_f} = \frac{1}{10^{-6}} \cdot \frac{1}{200} = 5000$$

$R' = K_m R =$ **<u>5 kΩ</u>**, thus, $R_f' = 2R_i =$ **<u>10 kΩ</u>**

Chapter 14, Solution 83.

$$1\mu F \longrightarrow C' = \frac{1}{K_m K_f} C = \frac{10^{-6}}{100x10^5} = \underline{0.1\,pF}$$

$$5\mu F \longrightarrow C' = \underline{0.5\,pF}$$

$$10\,k\Omega \longrightarrow R' = K_m R = 100x10\,k\Omega = \underline{1\,M\Omega}$$

$$20\,k\Omega \longrightarrow R' = \underline{2\,M\Omega}$$

Chapter 14, Solution 84.

The schematic is shown below. A voltage marker is inserted to measure v_o. In the AC sweep box, we select Total Points = 50, Start Frequency = 1, and End Frequency = 1000. After saving and simulation, we obtain the magnitude and phase plots in the probe menu as shown below.

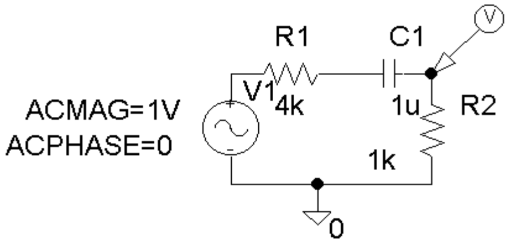

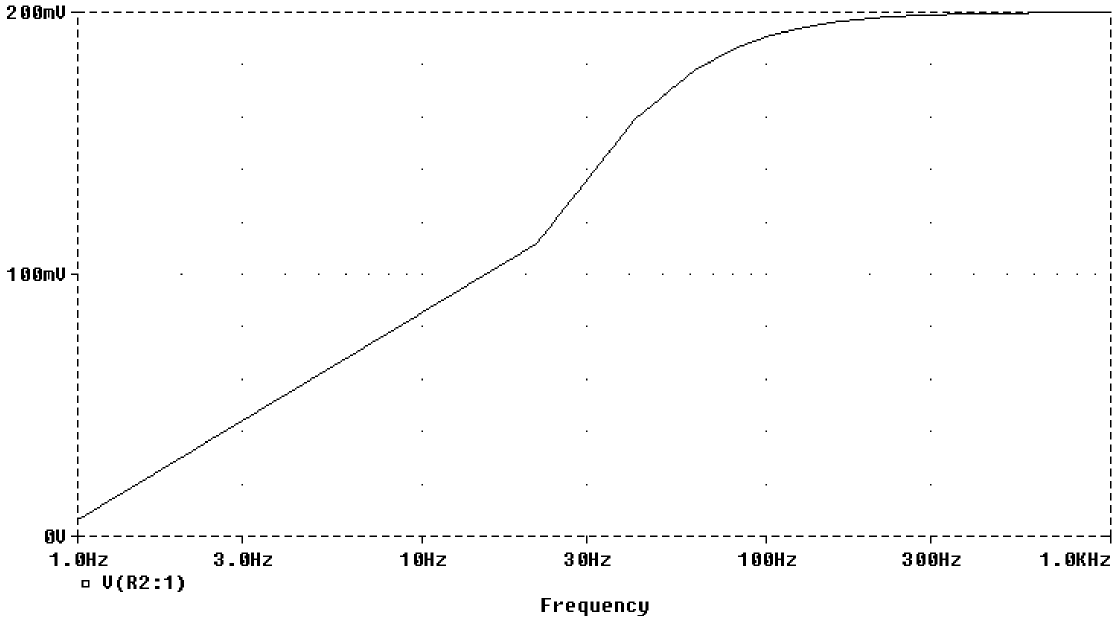

Chapter 14, Solution 85.

We let $I_s = 1\angle 0^o$ A so that $V_o / I_s = V_o$. The schematic is shown below. The circuit is simulated for $100 < f < 10$ kHz.

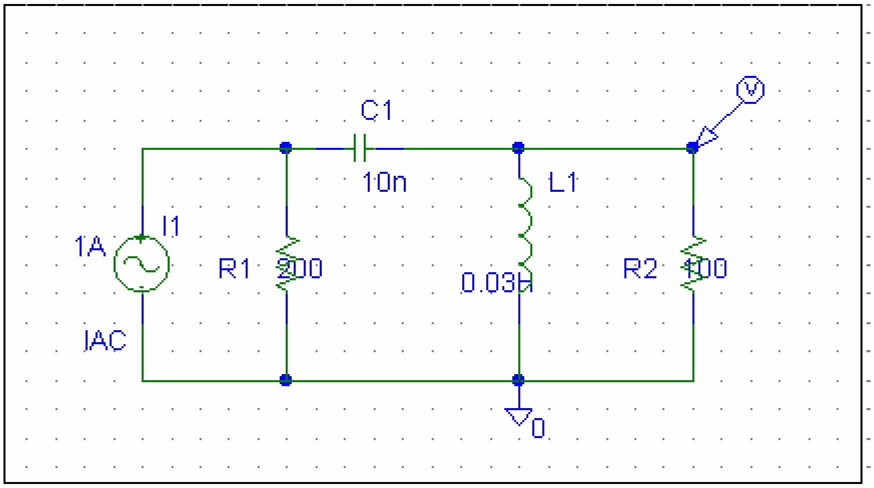

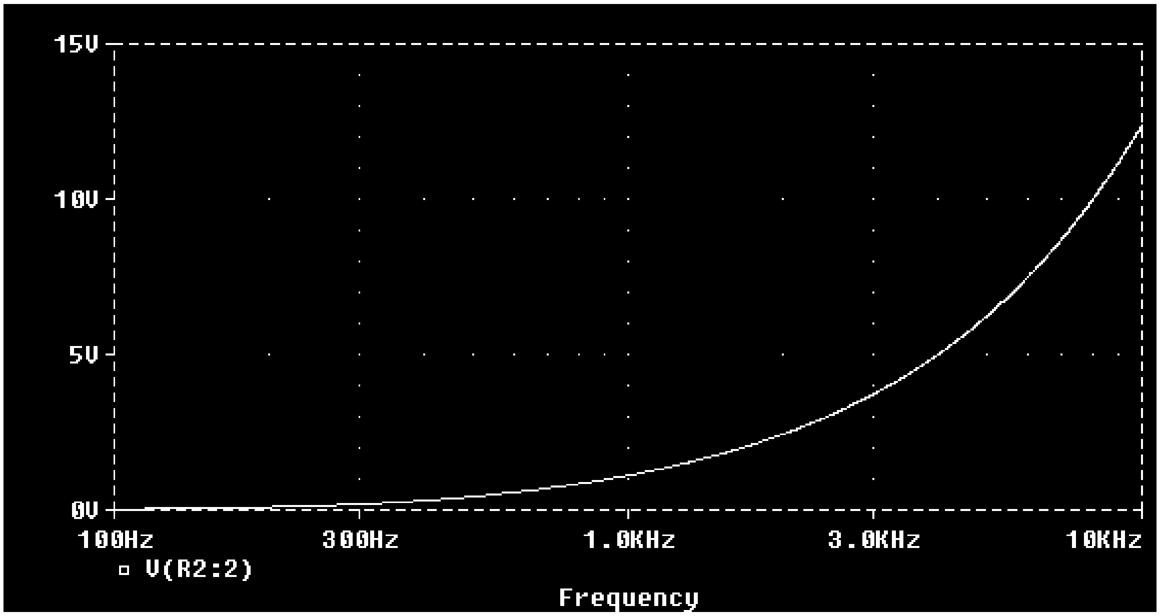

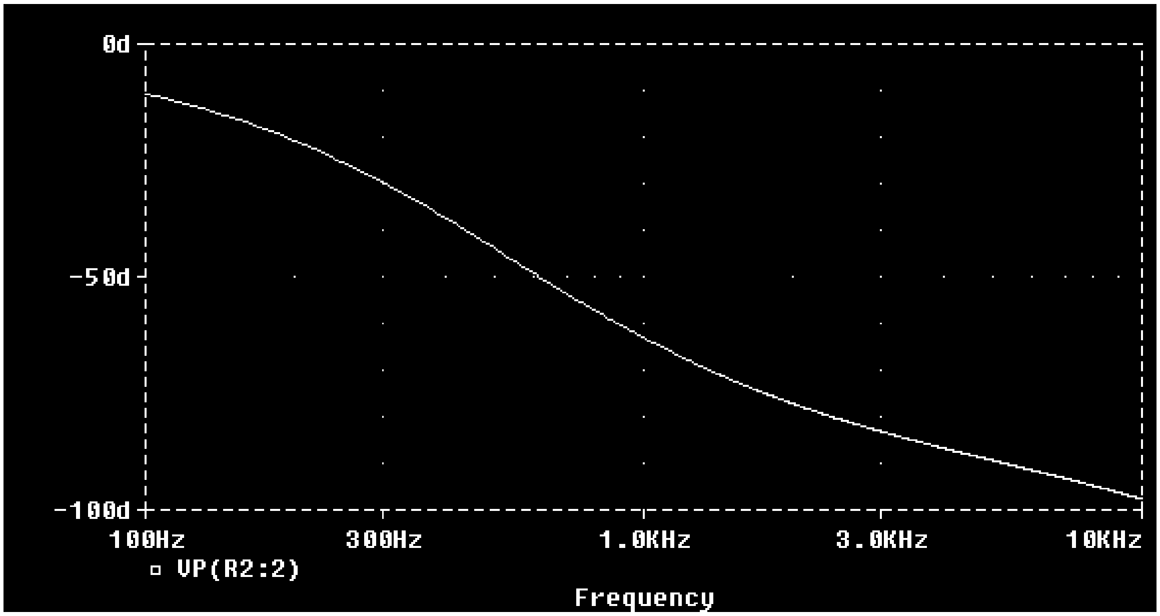

Chapter 14, Solution 86.

The schematic is shown below. A current marker is inserted to measure **I**. We set Total Points = 101, start Frequency = 1, and End Frequency = 10 kHz in the AC sweep box. After simulation, the magnitude and phase plots are obtained in the Probe menu as shown below.

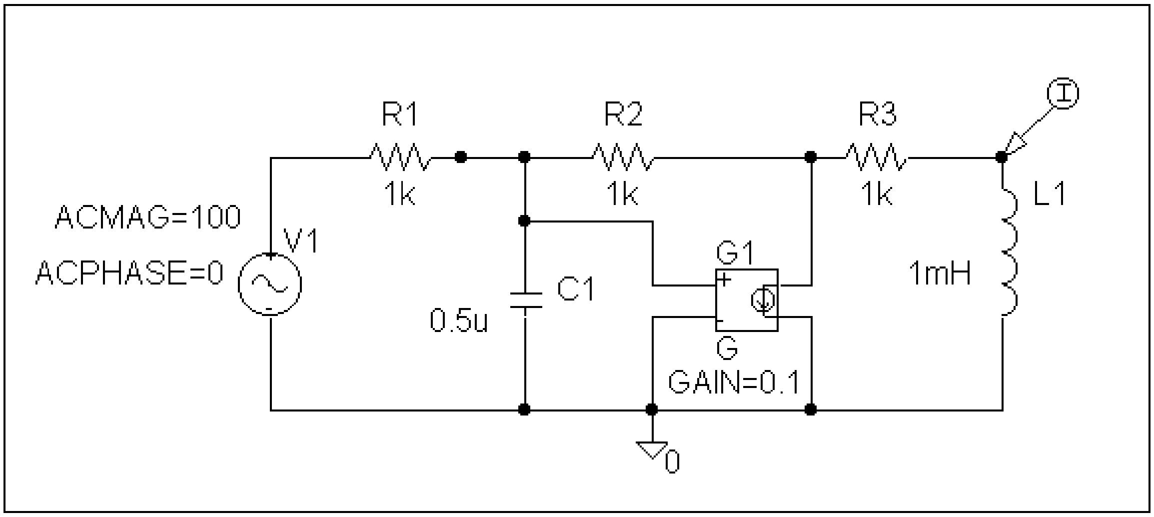
R1
1k
R2
1k
R3
1k
L1
1mH
ACMAG=100
ACPHASE=0
V1
C1
0.5u
G1
G
GAIN=0.1
0

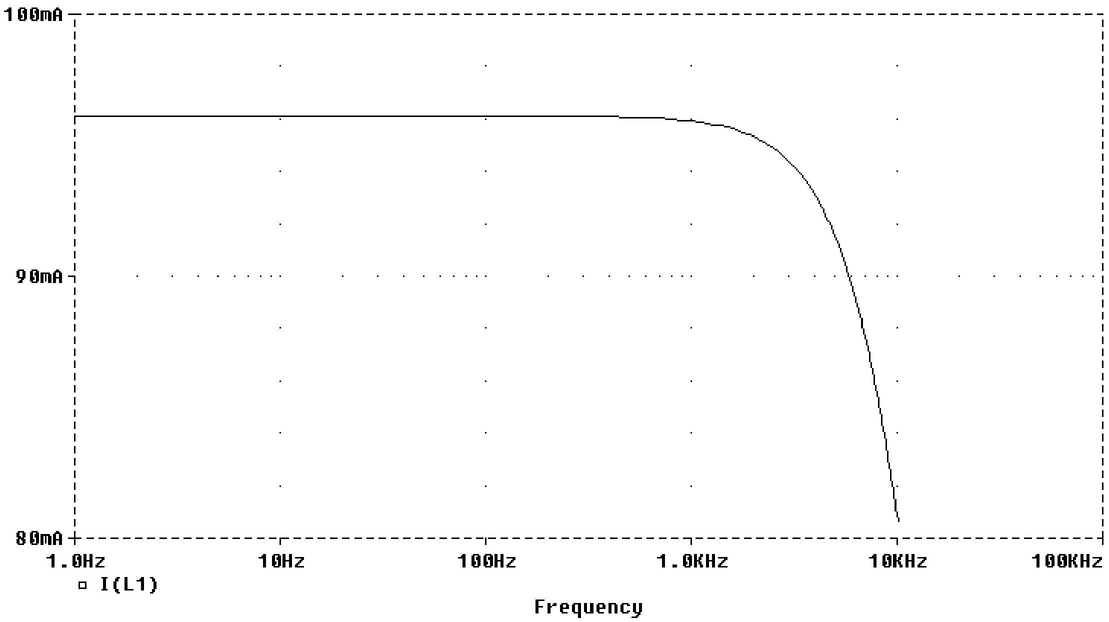
100mA
90mA
80mA
1.0Hz
10Hz
100Hz
1.0KHz
10KHz
100KHz
I(L1)
Frequency

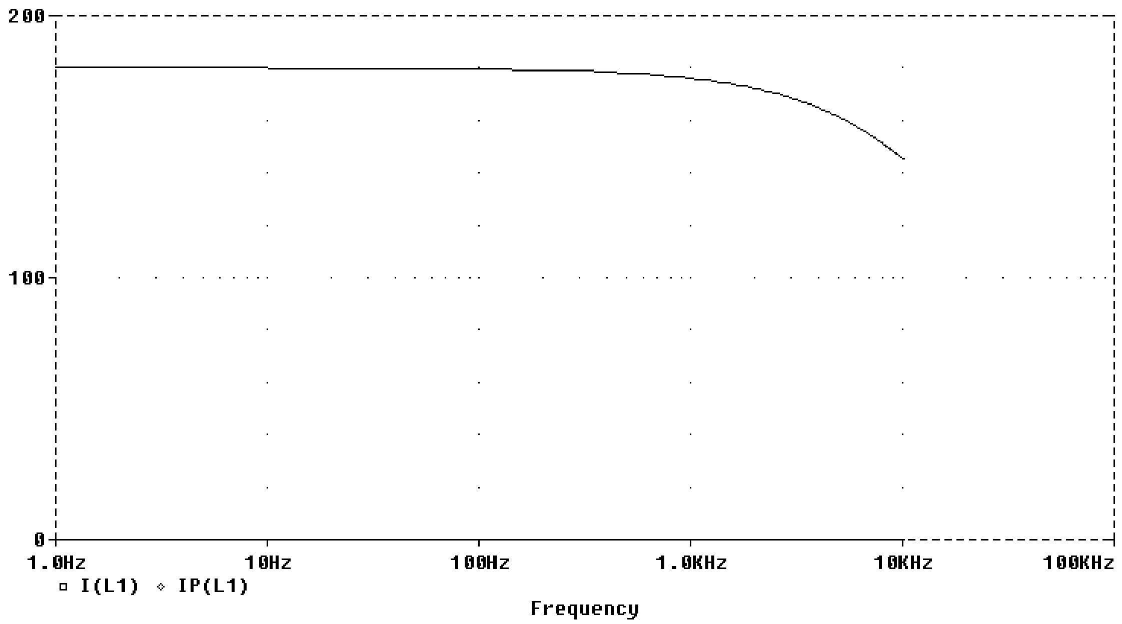

Chapter 14, Solution 87.

The schematic is shown below. I_n the AC Sweep box, we set Total Points = 50, Start Frequency = 1, and End Frequency = 100. After simulation, we obtain the magnitude response as shown below. It is evident from the response that the circuit represents a high-pass filter.

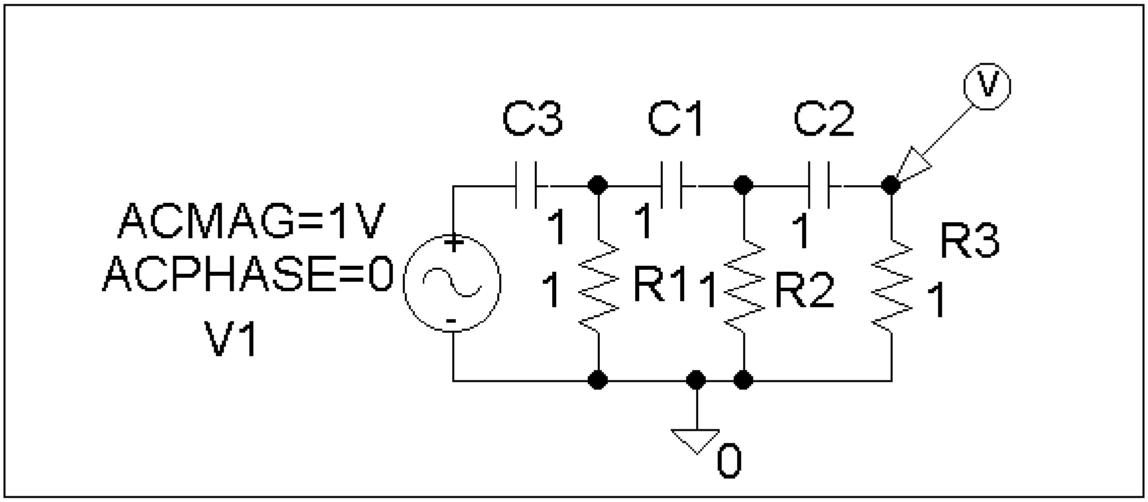

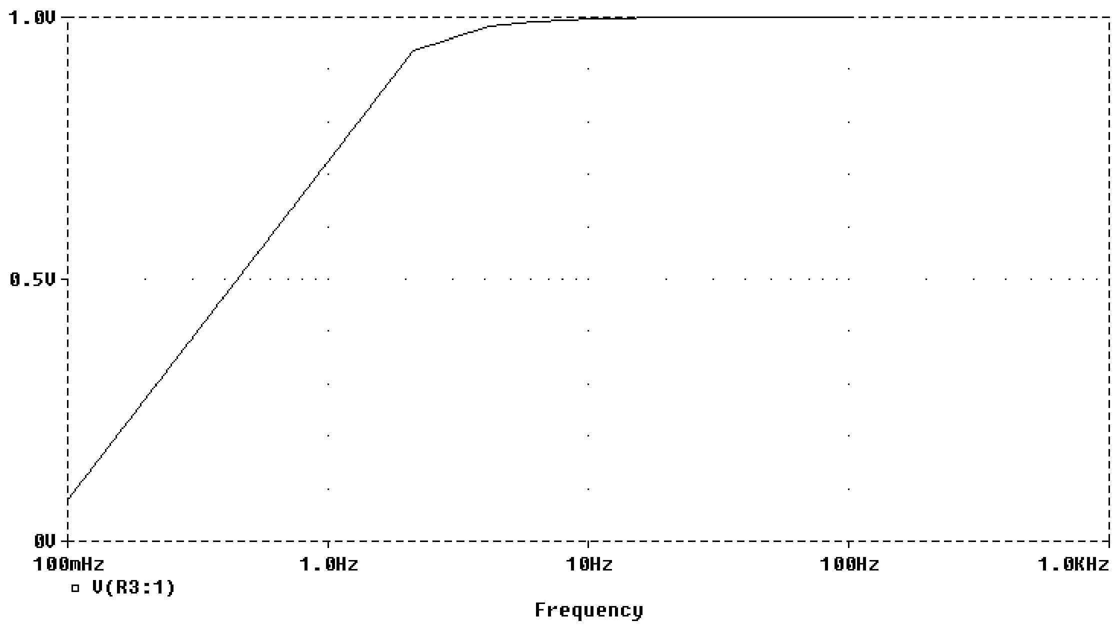

Chapter 14, Solution 88.

The schematic is shown below. We insert a voltage marker to measure V_o. In the AC Sweep box, we set Total Points = 101, Start Frequency = 1, and End Frequency = 100. After simulation, we obtain the magnitude and phase plots of V_o as shown below.

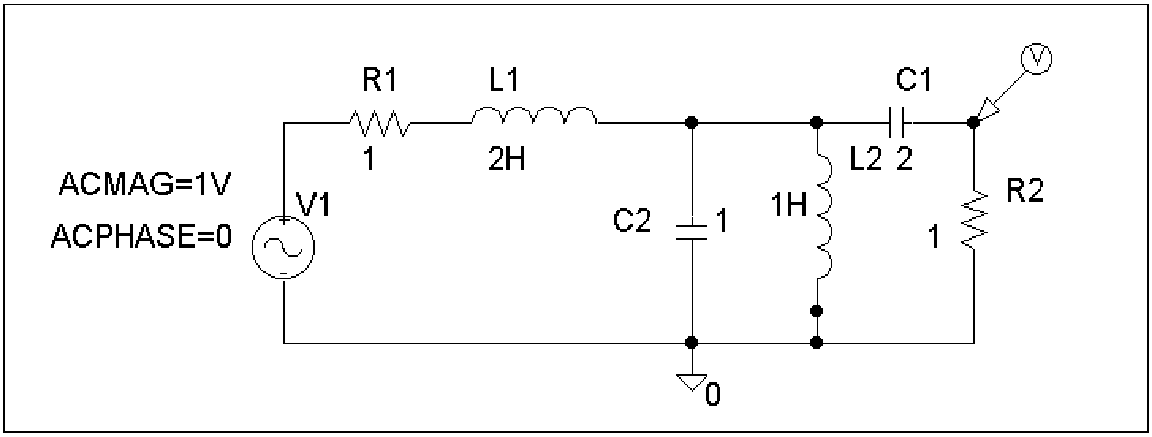

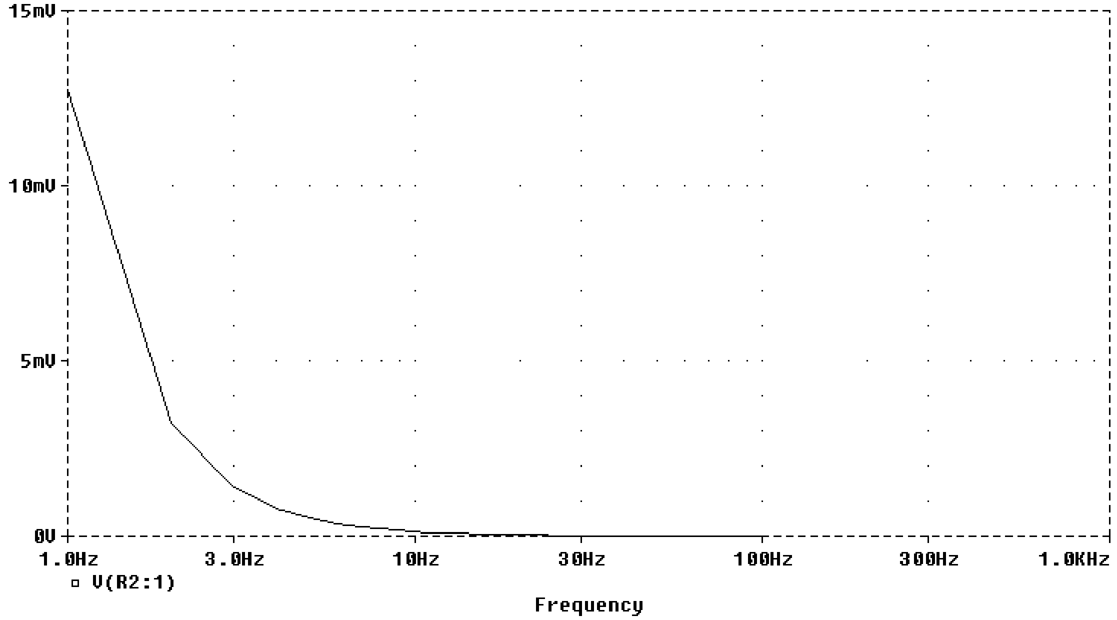

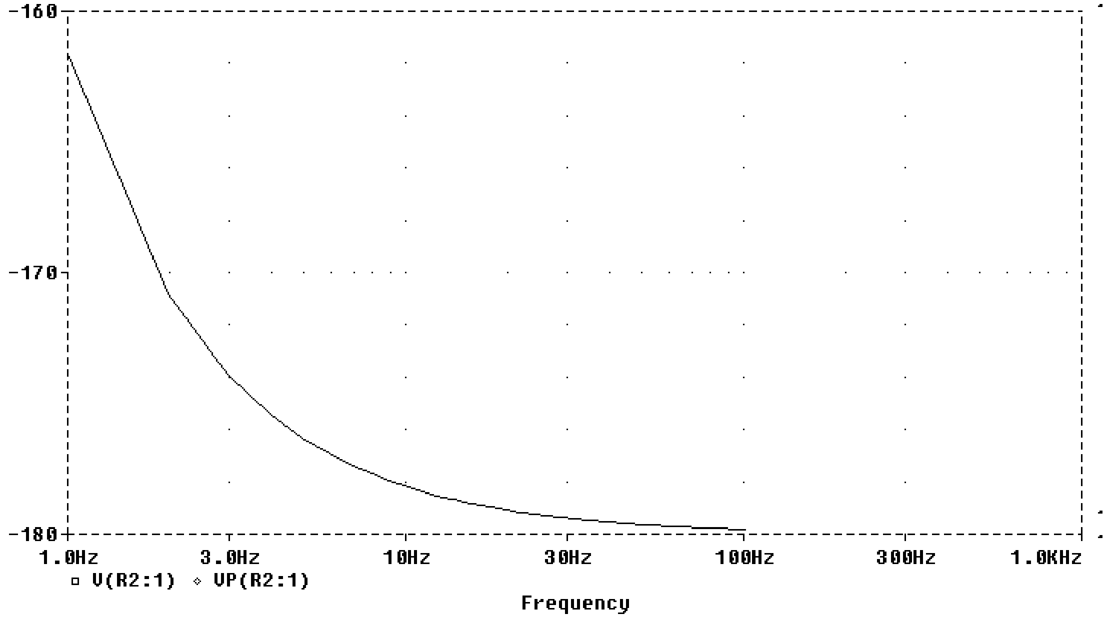

Chapter 14, Solution 89.

The schematic is shown below. In the AC Sweep box, we type Total Points = 101, Start Frequency = 100, and End Frequency = 1 k. After simulation, the magnitude plot of the response V_o is obtained as shown below.

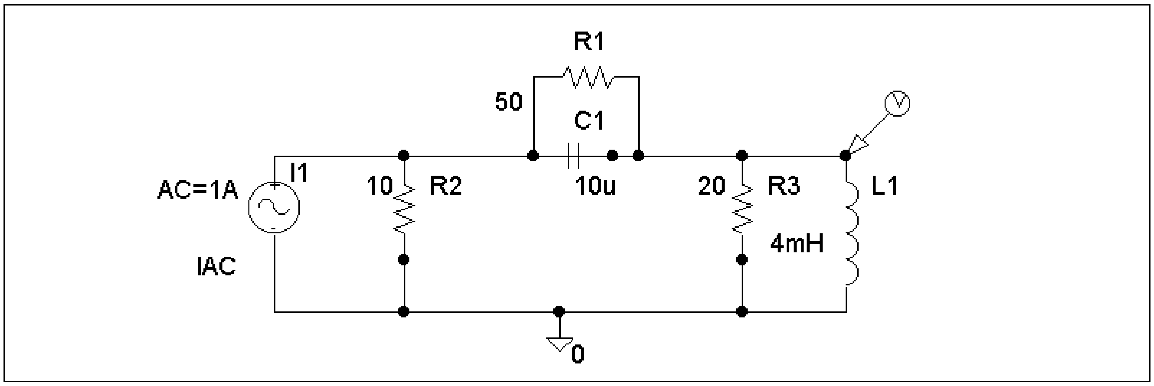

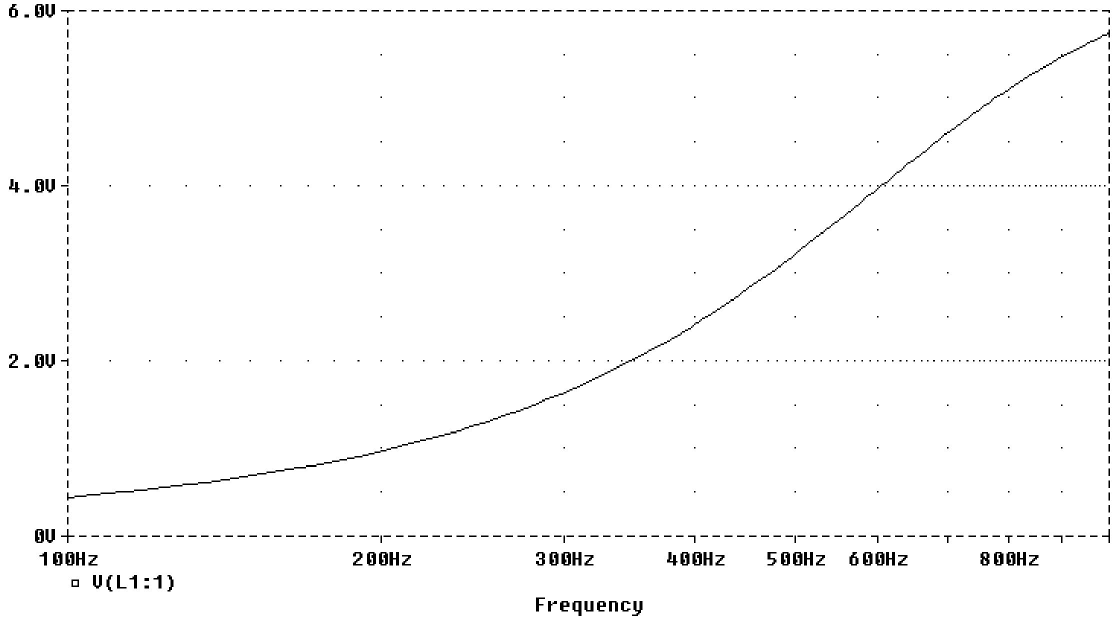

Chapter 14, Solution 90.

The schematic is shown below. In the AC Sweep box, we set Total Points = 1001, Start Frequency = 1, and End Frequency = 100k. After simulation, we obtain the magnitude plot of the response as shown below. The response shows that the circuit is a high-pass filter.

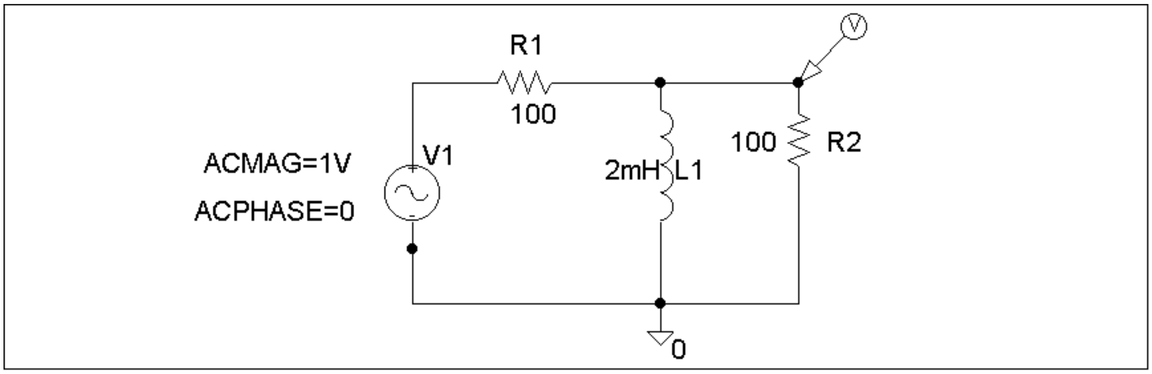

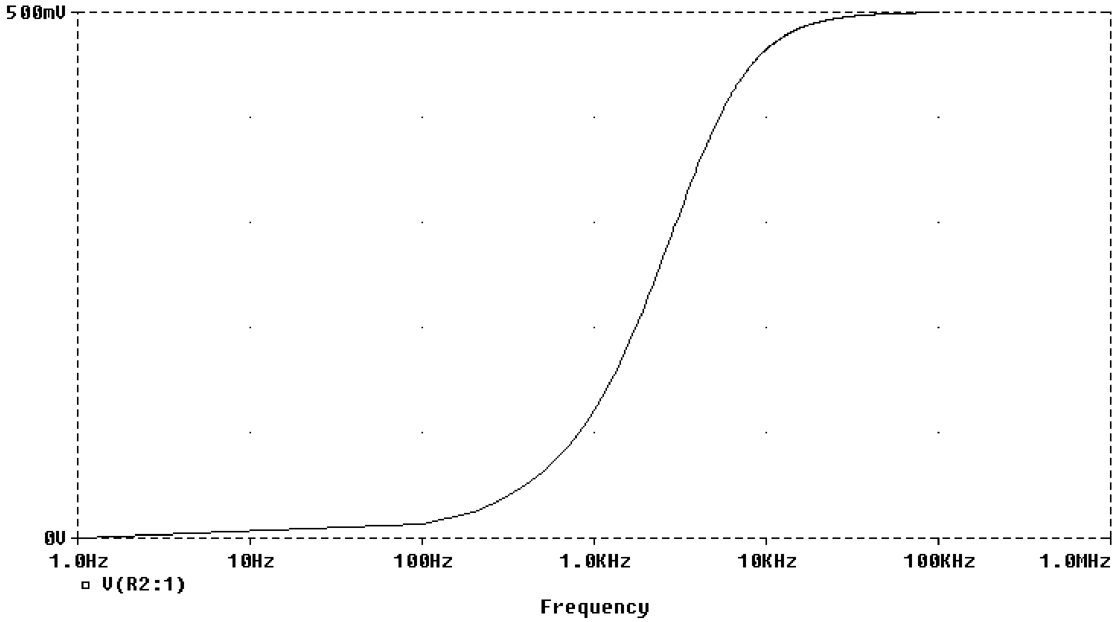

Chapter 14, Solution 91.

The schematic is shown below. In the AC Sweep box, we set Total Points = 1001, Start Frequency = 1, and End Frequency = 100k. After simulation, we obtain the magnitude plot of the response as shown below. The response shows that the circuit is a high-pass filter.

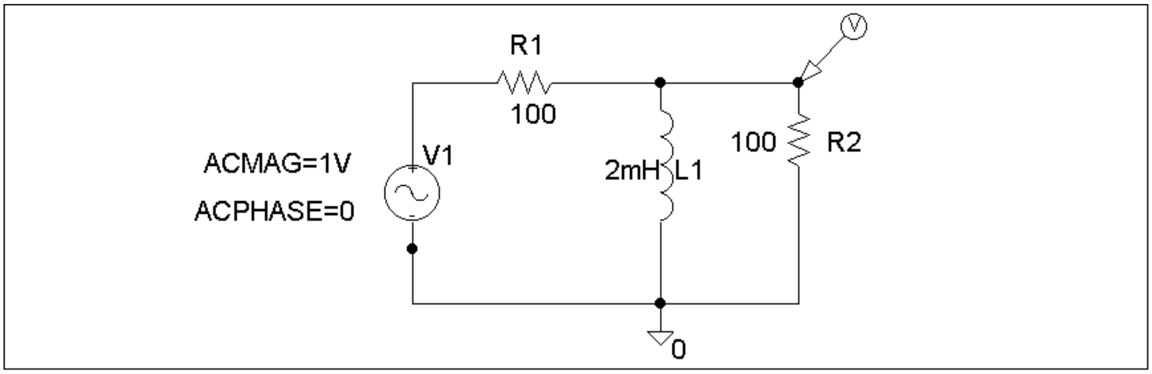

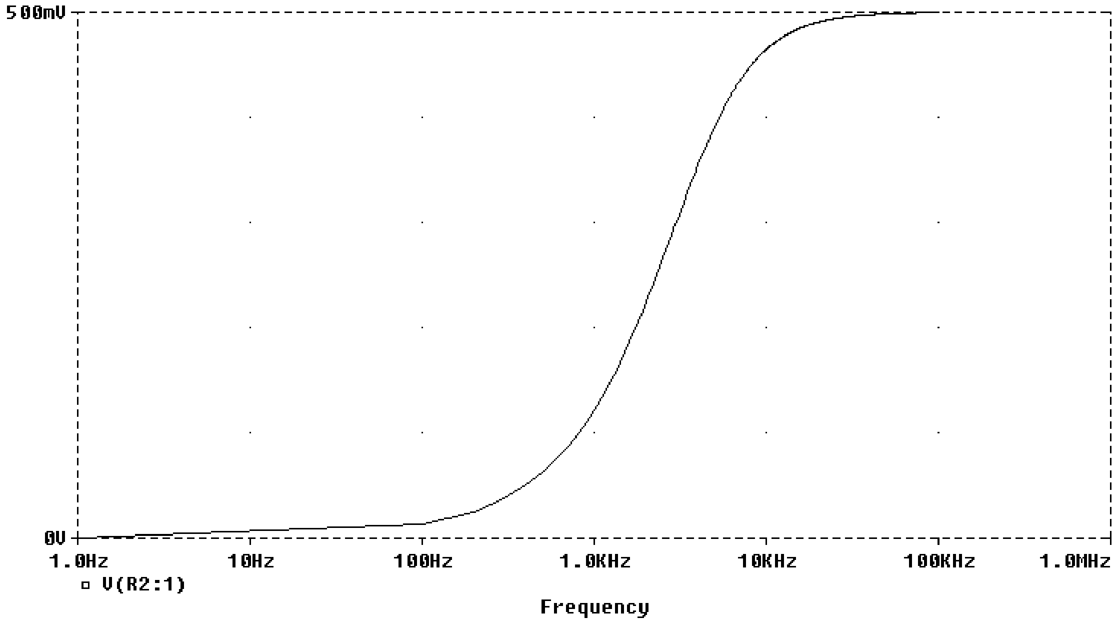

Chapter 14, Solution 92.

The schematic is shown below. We type Total Points = 101, Start Frequency = 1, and End Frequency = 100 in the AC Sweep box. After simulating the circuit, the magnitude plot of the frequency response is shown below.

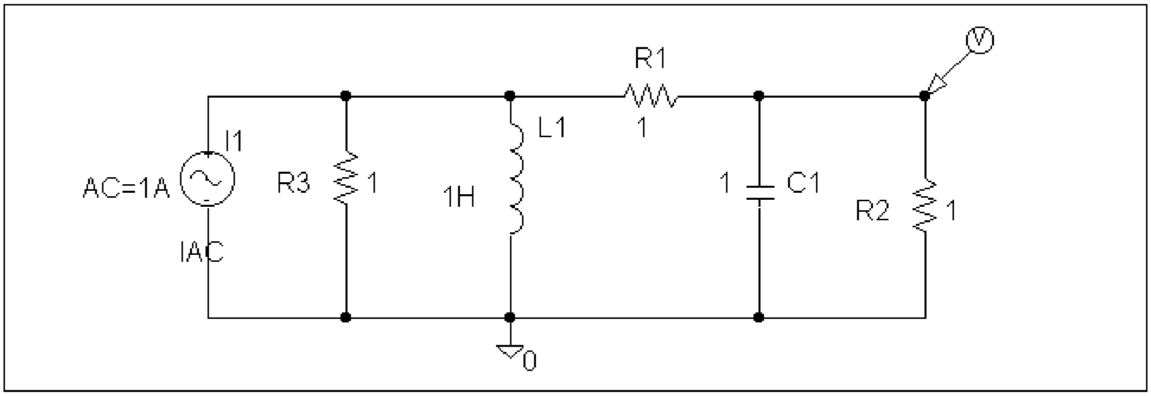

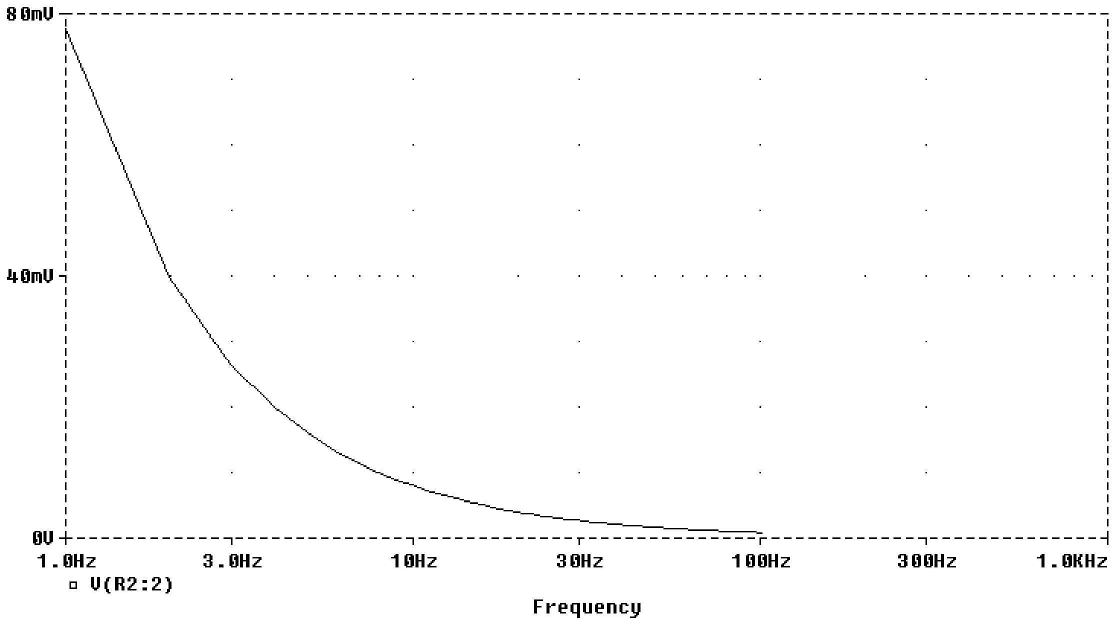

Chapter 14, Solution 93.

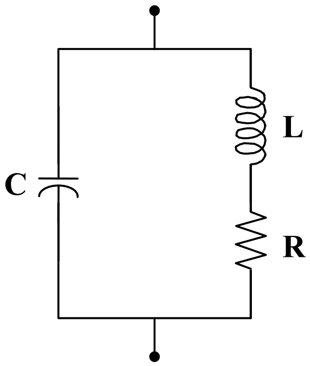

$$f_0 = \frac{1}{2\pi}\sqrt{\frac{1}{LC} - \frac{R^2}{L^2}}$$

$$\frac{R}{L} = \frac{400}{240 \times 10^{-6}} = \frac{10^7}{6}, \qquad \frac{1}{LC} = \frac{1}{(240 \times 10^{-6})(120 \times 10^{-12})} = \frac{10^{16}}{288}$$

Since $\frac{R}{L} << \frac{1}{LC}$

$$f_0 \cong \frac{1}{2\pi\sqrt{LC}} = \frac{10^8}{24\pi\sqrt{2}} = \underline{\mathbf{938\ kHz}}$$

If R is reduced to 40 Ω, $\frac{R}{L} << \frac{1}{LC}$.

<u>The result remains the same</u>.

Chapter 14, Solution 94.

$$\omega_c = \frac{1}{RC}$$

We make R and C as small as possible. To achieve this, we connect 1.8 kΩ and 3.3 kΩ in parallel so that

$$R = \frac{1.8x3.3}{1.8 + 3.3} = 1.164\ k\Omega$$

We place the 10-pF and 30-pF capacitors in series so that

C = (10x30)/40 = 7.5 pF

Hence,

$$\omega_c = \frac{1}{RC} = \frac{1}{1.164x10^3 x7.5x10^{-12}} = \underline{114.55x10^6\ \text{rad/s}}$$

Chapter 14, Solution 95.

(a) $$f_0 = \frac{1}{2\pi\sqrt{LC}}$$

When $C = 360\ pF$,

$$f_0 = \frac{1}{2\pi\sqrt{(240 \times 10^{-6})(360 \times 10^{-12})}} = 0.541\ MHz$$

When $C = 40\ pF$,

$$f_0 = \frac{1}{2\pi\sqrt{(240 \times 10^{-6})(40 \times 10^{-12})}} = 1.624\ MHz$$

Therefore, the frequency range is

$$\underline{\mathbf{0.541\ MHz < f_0 < 1.624\ MHz}}$$

(b) $$Q = \frac{2\pi f L}{R}$$

At $f_0 = 0.541\,\text{MHz}$,

$$Q = \frac{(2\pi)(0.541 \times 10^{6})(240 \times 10^{-6})}{12} = \underline{\mathbf{67.98}}$$

At $f_0 = 1.624\,\text{MHz}$,

$$Q = \frac{(2\pi)(1.624 \times 10^{6})(240 \times 10^{-6})}{12} = \underline{\mathbf{204.1}}$$

Chapter 14, Solution 96.

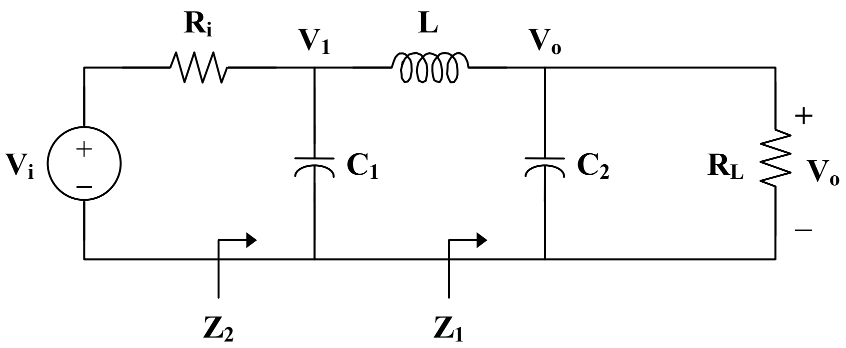

$$\mathbf{Z}_1 = R_L \parallel \frac{1}{sC_2} = \frac{R_L}{1 + sR_2C_2}$$

$$\mathbf{Z}_2 = \frac{1}{sC_1} \parallel (sL + \mathbf{Z}_1) = \frac{1}{sC_1} \parallel \left(\frac{sL + R_L + s^2 R_L C_2 L}{1 + sR_L C_2} \right)$$

$$\mathbf{Z}_2 = \frac{\frac{1}{sC_1} \cdot \frac{sL + R_L + s^2 R_L C_2 L}{1 + sR_L C_2}}{\frac{1}{sC_1} + \frac{sL + R_L + s^2 R_L C_2 L}{1 + sR_L C_2}}$$

$$\mathbf{Z}_2 = \frac{sL + R_L + s^2 R_L L C_2}{1 + sR_L C_2 + s^2 L C_1 + sR_L C_1 + s^3 R_L L C_1 C_2}$$

$$\mathbf{V}_1 = \frac{\mathbf{Z}_2}{\mathbf{Z}_2 + R_i}\mathbf{V}_i$$

$$\mathbf{V}_o = \frac{\mathbf{Z}_1}{\mathbf{Z}_1 + sL}\mathbf{V}_1 = \frac{\mathbf{Z}_2}{\mathbf{Z}_2 + R_2} \cdot \frac{\mathbf{Z}_1}{\mathbf{Z}_1 + sL}\mathbf{V}_i$$

$$\frac{\mathbf{V}_o}{\mathbf{V}_i} = \frac{\mathbf{Z}_2}{\mathbf{Z}_2 + R_2} \cdot \frac{\mathbf{Z}_1}{\mathbf{Z}_1 + sL}$$

where

$$\frac{\mathbf{Z}_2}{\mathbf{Z}_2 + R_2} =$$

$$\frac{sL + R_L + s^2R_LLC_2}{sL + R_L + s^2R_LLC_2 + R_i + sR_iR_LC_2 + s^2R_iLC_1 + sR_iR_LC_1 + s^3R_iR_LLC_1C_2}$$

and $$\frac{\mathbf{Z}_1}{\mathbf{Z}_1 + sL} = \frac{R_L}{R_L + sL + s^2R_LLC_2}$$

Therefore,

$$\frac{\mathbf{V}_o}{\mathbf{V}_i} =$$

$$\mathbf{\frac{R_L(sL + R_L + s^2R_LLC_2)}{(sL + R_L + s^2R_LLC_2 + R_i + sR_iR_LC_2 + s^2R_iLC_1 + sR_iR_LC_1 + s^3R_iR_LLC_1C_2)(R_L + sL + s^2R_LLC_2)}}$$

where $s = j\omega$.

Chapter 14, Solution 97.

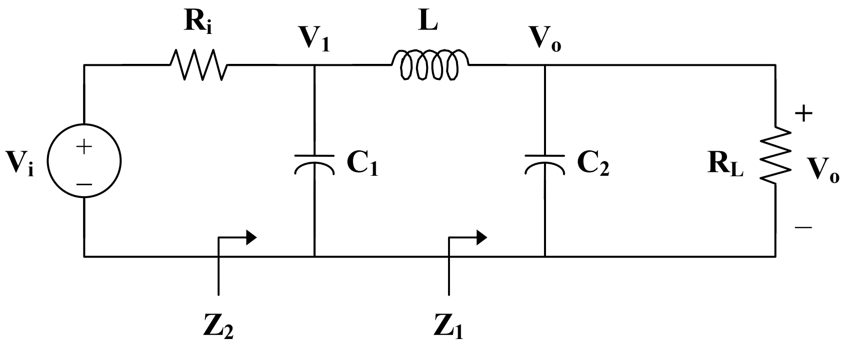

$$\mathbf{Z} = sL \parallel \left(R_L + \frac{1}{sC_2} \right) = \frac{sL(R_L + 1/sC_2)}{R_L + sL + 1/sC_2}, \qquad s = j\omega$$

$$\mathbf{V}_1 = \frac{\mathbf{Z}}{\mathbf{Z} + R_i + 1/sC_1} \mathbf{V}_i$$

$$\mathbf{V}_o = \frac{R_L}{R_L + 1/sC_2} \mathbf{V}_1 = \frac{R_L}{R_L + 1/sC_2} \cdot \frac{\mathbf{Z}}{\mathbf{Z} + R_i + 1/sC_1} \mathbf{V}_i$$

$$\mathbf{H}(\omega) = \frac{\mathbf{V}_o}{\mathbf{V}_i} = \frac{R_L}{R_L + 1/sC_2} \cdot \frac{sL(R_L + 1/sC_2)}{sL(R_L + 1/sC_2) + (R_i + 1/sC_1)(R_L + sL + 1/sC_2)}$$

$$\mathbf{H}(\omega) = \underline{\frac{\mathbf{s^3 L R_L C_1 C_2}}{\mathbf{(sR_i C_1 + 1)(s^2 LC_2 + sR_L C_2 + 1) + s^2 LC_1 (sR_L C_2 + 1)}}}$$

where $s = j\omega$.

Chapter 14, Solution 98.

$$B = \omega_2 - \omega_1 = 2\pi(f_2 - f_1) = 2\pi(454 - 432) = 44\pi$$

$$\omega_0 = 2\pi f_0 = QB = (20)(44\pi)$$

$$f_0 = \frac{(20)(44\pi)}{2\pi} = (20)(22) = \underline{\mathbf{440\ Hz}}$$

Chapter 14, Solution 99.

$$X_c = \frac{1}{\omega C} = \frac{1}{2\pi f\, C}$$

$$C = \frac{1}{2\pi f\, X_c} = \frac{1}{(2\pi)(2\times10^6)(5\times10^3)} = \frac{10^{-9}}{20\pi}$$

$$X_L = \omega L = 2\pi f\, L$$

$$L = \frac{X_L}{2\pi f} = \frac{300}{(2\pi)(2\times 10^6)} = \frac{3\times 10^{-4}}{4\pi}$$

$$f_0 = \frac{1}{2\pi\sqrt{LC}} = \frac{1}{2\pi\sqrt{\frac{3\times 10^{-4}}{4\pi}\cdot\frac{10^{-9}}{20\pi}}} = \underline{\mathbf{1.826\ MHz}}$$

$$B = \frac{R}{L} = (100)\left(\frac{4\pi}{3\times 10^{-4}}\right) = \underline{\mathbf{4.188\times 10^6\ rad/s}}$$

Chapter 14, Solution 100.

$$\omega_c = 2\pi f_c = \frac{1}{RC}$$

$$R = \frac{1}{2\pi f_c C} = \frac{1}{(2\pi)(20\times 10^3)(0.5\times 10^{-6})} = \underline{\mathbf{15.91\ \Omega}}$$

Chapter 14, Solution 101.

$$\omega_c = 2\pi f_c = \frac{1}{RC}$$

$$R = \frac{1}{2\pi f_c C} = \frac{1}{(2\pi)(15)(10\times 10^{-6})} = \underline{\mathbf{1.061\ k\Omega}}$$

Chapter 14, Solution 102.

(a) When $R_s = 0$ and $R_L = \infty$, we have a low-pass filter.

$$\omega_c = 2\pi f_c = \frac{1}{RC}$$

$$f_c = \frac{1}{2\pi RC} = \frac{1}{(2\pi)(4\times 10^3)(40\times 10^{-9})} = \underline{\mathbf{994.7\ Hz}}$$

(b) We obtain R_{Th} across the capacitor.

$$R_{Th} = R_L \parallel (R + R_s)$$
$$R_{Th} = 5 \parallel (4+1) = 2.5 \text{ k}\Omega$$

$$f_c = \frac{1}{2\pi R_{Th} C} = \frac{1}{(2\pi)(2.5\times 10^3)(40\times 10^{-9})}$$

$$f_c = \underline{\mathbf{1.59\ kHz}}$$

Chapter 14, Solution 103.

$$\mathbf{H}(\omega) = \frac{\mathbf{V}_o}{\mathbf{V}_i} = \frac{R_2}{R_2 + R_1 \parallel 1/sC}, \qquad s = j\omega$$

$$\mathbf{H}(\omega) = \frac{R_2}{R_2 + \dfrac{R_1(1/sC)}{R_1 + 1/sC}} = \frac{R_2(R_1 + 1/sC)}{R_2 + R_1(1/sC)}$$

$$\mathbf{H}(\omega) = \underline{\frac{\mathbf{R_2(1 + sCR_1)}}{\mathbf{R_1 + sCR_2}}}$$

Chapter 14, Solution 104.

The schematic is shown below. We click Analysis/Setup/AC Sweep and enter Total Points = 1001, Start Frequency = 100, and End Frequency = 100 k. After simulation, we obtain the magnitude plot of the response as shown.

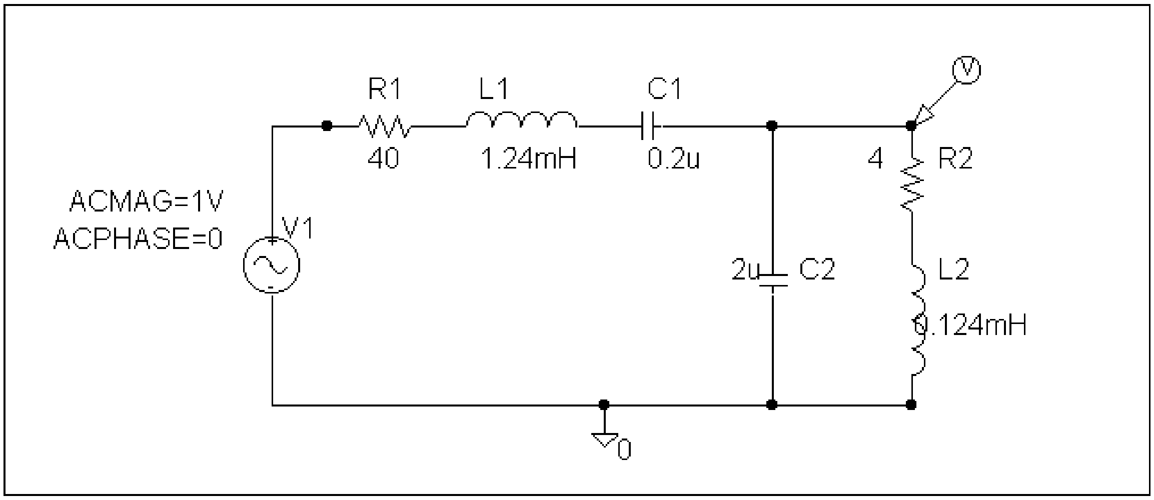

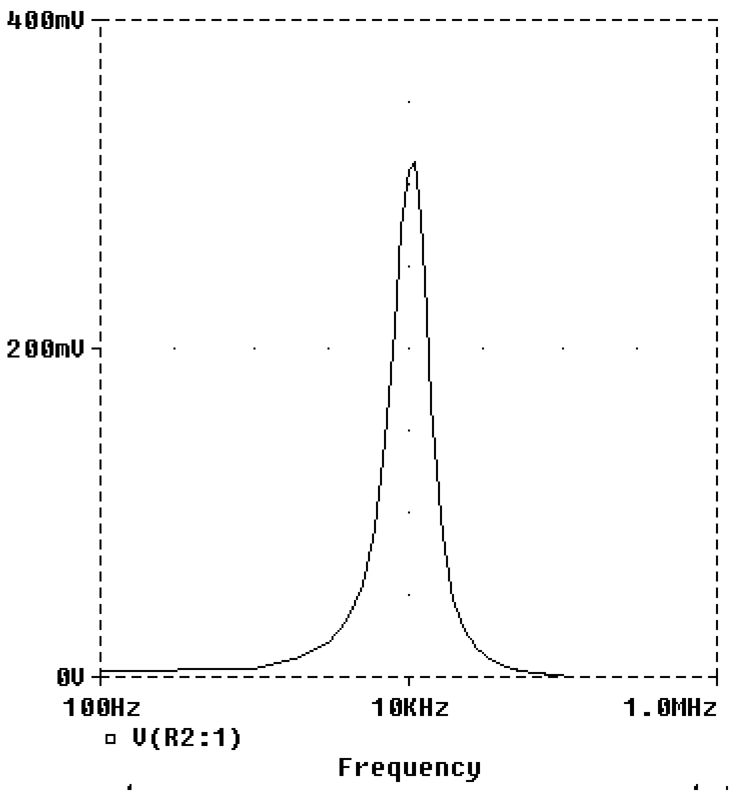
400mV
200mV
0V
100Hz
10KHz
1.0MHz
V(R2:1)
Frequency

Chapter 15, Solution 1.

(a) $$\cosh(at) = \frac{e^{at} + e^{-at}}{2}$$

$$L\left[\cosh(at)\right] = \frac{1}{2}\left[\frac{1}{s-a} + \frac{1}{s+a}\right] = \underline{\frac{\mathbf{s}}{\mathbf{s^2 - a^2}}}$$

(b) $$\sinh(at) = \frac{e^{at} - e^{-at}}{2}$$

$$L\left[\sinh(at)\right] = \frac{1}{2}\left[\frac{1}{s-a} - \frac{1}{s+a}\right] = \underline{\frac{\mathbf{a}}{\mathbf{s^2 - a^2}}}$$

Chapter 15, Solution 2.

(a) $$f(t) = \cos(\omega t)\cos(\theta) - \sin(\omega t)\sin(\theta)$$

$$F(s) = \cos(\theta)\,L\left[\cos(\omega t)\right] - \sin(\theta)\,L\left[\sin(\omega t)\right]$$

$$F(s) = \underline{\frac{\mathbf{s\cos(\theta) - \omega\sin(\theta)}}{\mathbf{s^2 + \omega^2}}}$$

(b) $$f(t) = \sin(\omega t)\cos(\theta) + \cos(\omega t)\sin(\theta)$$

$$F(s) = \sin(\theta)\,L\left[\cos(\omega t)\right] + \cos(\theta)\,L\left[\sin(\omega t)\right]$$

$$F(s) = \underline{\frac{\mathbf{s\sin(\theta) - \omega\cos(\theta)}}{\mathbf{s^2 + \omega^2}}}$$

Chapter 15, Solution 3.

(a) $$L\left[e^{-2t}\cos(3t)\,u(t)\right] = \underline{\frac{\mathbf{s+2}}{\mathbf{(s+2)^2 + 9}}}$$

(b) $$L\left[e^{-2t}\sin(4t)\,u(t)\right] = \underline{\frac{\mathbf{4}}{\mathbf{(s+2)^2 + 16}}}$$

(c) Since $\mathcal{L}\left[\cosh(at)\right] = \dfrac{s}{s^2 - a^2}$

$$\mathcal{L}\left[e^{-3t}\cosh(2t)u(t)\right] = \underline{\mathbf{\frac{s+3}{(s+3)^2 - 4}}}$$

(d) Since $\mathcal{L}\left[\sinh(at)\right] = \dfrac{a}{s^2 - a^2}$

$$\mathcal{L}\left[e^{-4t}\sinh(t)u(t)\right] = \underline{\mathbf{\frac{1}{(s+4)^2 - 1}}}$$

(e) $\mathcal{L}\left[e^{-t}\sin(2t)\right] = \dfrac{2}{(s+1)^2 + 4}$

If $\quad f(t) \longleftrightarrow F(s)$

$$t\,f(t) \longleftrightarrow \frac{-d}{ds}F(s)$$

Thus, $\mathcal{L}\left[t\,e^{-t}\sin(2t)\right] = \dfrac{-d}{ds}\left[2\left((s+1)^2 + 4\right)^{-1}\right]$

$$= \frac{2}{((s+1)^2 + 4)^2}\cdot 2(s+1)$$

$$\mathcal{L}\left[t\,e^{-t}\sin(2t)\right] = \underline{\mathbf{\frac{4(s+1)}{((s+1)^2 + 4)^2}}}$$

Chapter 15, Solution 4.

(a) $G(s) = 6\dfrac{s}{s^2 + 4^2}e^{-s} = \underline{\dfrac{6se^{-s}}{s^2 + 16}}$

(b) $F(s) = \underline{\dfrac{2}{s^2} + 5\dfrac{e^{-2s}}{s+3}}$

Chapter 15, Solution 5.

(a) $$\mathcal{L}\left[\cos(2t+30°)\right] = \frac{s\cos(30°) - 2\sin(30°)}{s^2+4}$$

$$\mathcal{L}\left[t^2\cos(2t+30°)\right] = \frac{d^2}{ds^2}\left[\frac{s\cos(30°)-1}{s^2+4}\right]$$

$$= \frac{d}{ds}\frac{d}{ds}\left[\left(\frac{\sqrt{3}}{2}s-1\right)\left(s^2+4\right)^{-1}\right]$$

$$= \frac{d}{ds}\left[\frac{\sqrt{3}}{2}\left(s^2+4\right)^{-1} - 2s\left(\frac{\sqrt{3}}{2}s-1\right)\left(s^2+4\right)^{-2}\right]$$

$$= \frac{\frac{\sqrt{3}}{2}(-2s)}{\left(s^2+4\right)^2} - \frac{2\left(\frac{\sqrt{3}}{2}s-1\right)}{\left(s^2+4\right)^2} - \frac{2s\left(\frac{\sqrt{3}}{2}\right)}{\left(s^2+4\right)^2} + \frac{(8s^2)\left(\frac{\sqrt{3}}{2}s-1\right)}{\left(s^2+4\right)^3}$$

$$= \frac{-\sqrt{3}s - \sqrt{3}s + 2 - \sqrt{3}s}{\left(s^2+4\right)^2} + \frac{(8s^2)\left(\frac{\sqrt{3}}{2}s-1\right)}{\left(s^2+4\right)^3}$$

$$= \frac{(-3\sqrt{3}s+2)(s^2+4)}{\left(s^2+4\right)^3} + \frac{4\sqrt{3}s^3-8s^2}{\left(s^2+4\right)^3}$$

$$\mathcal{L}\left[t^2\cos(2t+30°)\right] = \underline{\mathbf{\frac{8-12\sqrt{3}s-6s^2+\sqrt{3}s^3}{\left(s^2+4\right)^3}}}$$

(b) $$\mathcal{L}\left[30t^4e^{-t}\right] = 30\cdot\frac{4!}{(s+2)^5} = \underline{\mathbf{\frac{720}{(s+2)^5}}}$$

(c) $$\mathcal{L}\left[2t\,u(t) - 4\frac{d}{dt}\delta(t)\right] = \frac{2}{s^2} - 4(s\cdot 1 - 0) = \underline{\mathbf{\frac{2}{s^2} - 4s}}$$

(d) $2e^{-(t-1)}u(t) = 2e^{-t}u(t)$

$$\mathcal{L}\left[2e^{-(t-1)}u(t)\right] = \underline{\mathbf{\frac{2e}{s+1}}}$$

(e) Using the scaling property,

$$\mathcal{L}\left[5u(t/2)\right] = 5\cdot\frac{1}{1/2}\cdot\frac{1}{s/(1/2)} = 5\cdot 2\cdot\frac{1}{2s} = \underline{\mathbf{\frac{5}{s}}}$$

(f) $$\mathcal{L}\left[6e^{-t/3}u(t)\right] = \frac{6}{s+1/3} = \underline{\mathbf{\frac{18}{3s+1}}}$$

(g) Let $f(t) = \delta(t)$. Then, $F(s) = 1$.

$$\mathcal{L}\left[\frac{d^n}{dt^n}\delta(t)\right] = \mathcal{L}\left[\frac{d^n}{dt^n}f(t)\right] = s^n F(s) - s^{n-1}f(0) - s^{n-2}f'(0) - \cdots$$

$$\mathcal{L}\left[\frac{d^n}{dt^n}\delta(t)\right] = \mathcal{L}\left[\frac{d^n}{dt^n}f(t)\right] = s^n\cdot 1 - s^{n-1}\cdot 0 - s^{n-2}\cdot 0 - \cdots$$

$$\mathcal{L}\left[\frac{d^n}{dt^n}\delta(t)\right] = \underline{\mathbf{s^n}}$$

Chapter 15, Solution 6.

(a) $$\mathcal{L}\left[2\delta(t-1)\right] = \underline{\mathbf{2e^{-s}}}$$

(b) $$\mathcal{L}\left[10u(t-2)\right] = \underline{\mathbf{\frac{10}{s}e^{-2s}}}$$

(c) $$\mathcal{L}\left[(t+4)u(t)\right] = \underline{\mathbf{\frac{1}{s^2} + \frac{4}{s}}}$$

(d) $$\mathcal{L}\left[2e^{-t}u(t-4)\right] = \mathcal{L}\left[2e^{-4}e^{-(t-4)}u(t-4)\right] = \underline{\mathbf{\frac{2e^{-4s}}{e^4(s+1)}}}$$

Chapter 15, Solution 7.

(a) Since $\mathcal{L}\left[\cos(4t)\right] = \dfrac{s}{s^2+4^2}$, we use the linearity and shift properties to obtain $\mathcal{L}\left[10\cos(4(t-1))u(t-1)\right] = \underline{\dfrac{\mathbf{10\,s\,e^{-s}}}{\mathbf{s^2+16}}}$

(b) Since $\mathcal{L}\left[t^2\right] = \dfrac{2}{s^3}$, $\mathcal{L}\left[u(t)\right] = \dfrac{1}{s}$,

$\mathcal{L}\left[t^2\,e^{-2t}\right] = \dfrac{2}{(s+2)^3}$, and $\mathcal{L}\left[u(t-3)\right] = \dfrac{e^{-3s}}{s}$

$$\mathcal{L}\left[t^2\,e^{-2t}\,u(t)+u(t-3)\right] = \underline{\frac{\mathbf{2}}{\mathbf{(s+2)^3}} + \frac{\mathbf{e^{-3s}}}{\mathbf{s}}}$$

Chapter 15, Solution 8.

(a) $\mathcal{L}\left[2\delta(3t)+6u(2t)+4e^{-2t}-10e^{-3t}\right]$

$$= 2\cdot\frac{1}{3} + 6\cdot\frac{1}{2}\cdot\frac{1}{s/2} + \frac{4}{s+2} - \frac{10}{s+3}$$

$$= \underline{\frac{\mathbf{2}}{\mathbf{3}} + \frac{\mathbf{6}}{\mathbf{s}} + \frac{\mathbf{4}}{\mathbf{s+2}} - \frac{\mathbf{10}}{\mathbf{s+3}}}$$

(b) $t\,e^{-t}\,u(t-1) = (t-1)\,e^{-t}\,u(t-1) + e^{-t}\,u(t-1)$
$t\,e^{-t}\,u(t-1) = (t-1)\,e^{-(t-1)}\,e^{-1}\,u(t-1) + e^{-(t-1)}\,e^{-1}\,u(t-1)$

$$\mathcal{L}\left[t\,e^{-t}\,u(t-1)\right] = \frac{e^{-1}\,e^{-s}}{(s+1)^2} + \frac{e^{-1}\,e^{-s}}{s+1} = \underline{\frac{\mathbf{e^{-(s+1)}}}{\mathbf{(s+1)^2}} + \frac{\mathbf{e^{-(s+1)}}}{\mathbf{s+1}}}$$

(c) $\mathcal{L}\left[\cos(2(t-1))\,u(t-1)\right] = \underline{\dfrac{\mathbf{s\,e^{-s}}}{\mathbf{s^2+4}}}$

(d) Since $\sin(4(t-\pi)) = \sin(4t)\cos(4\pi) - \sin(4\pi)\cos(4t) = \sin(4t)$

$\sin(4t)\,u(t-\pi) = \sin(4(t-\pi))\,u(t-\pi)$

$$\mathcal{L}\left[\sin(4t)\left[u(t) - u(t-\pi)\right]\right]$$
$$= \mathcal{L}\left[\sin(4t)\,u(t)\right] - \mathcal{L}\left[\sin(4(t-\pi))\,u(t-\pi)\right]$$

$$= \frac{4}{s^2+16} - \frac{4e^{-\pi s}}{s^2+16} = \underline{\mathbf{\frac{4}{s^2+16}\cdot(1-e^{-\pi s})}}$$

Chapter 15, Solution 9.

(a) $f(t) = (t-4)\,u(t-2) = (t-2)\,u(t-2) - 2\,u(t-2)$

$$F(s) = \underline{\mathbf{\frac{e^{-2s}}{s^2} - \frac{2e^{-2s}}{s^2}}}$$

(b) $g(t) = 2e^{-4t}\,u(t-1) = 2e^{-4}\,e^{-4(t-1)}\,u(t-1)$

$$G(s) = \underline{\mathbf{\frac{2e^{-s}}{e^4(s+4)}}}$$

(c) $h(t) = 5\cos(2t-1)\,u(t)$

$\cos(A-B) = \cos(A)\cos(B) + \sin(A)\sin(B)$

$\cos(2t-1) = \cos(2t)\cos(1) + \sin(2t)\sin(1)$

$h(t) = 5\cos(1)\cos(2t)\,u(t) + 5\sin(1)\sin(2t)\,u(t)$

$$H(s) = 5\cos(1)\cdot\frac{s}{s^2+4} + 5\sin(1)\cdot\frac{2}{s^2+4}$$

$$H(s) = \underline{\mathbf{\frac{2.702\,s}{s^2+4} + \frac{8.415}{s^2+4}}}$$

(d) $p(t) = 6u(t-2) - 6u(t-4)$

$$P(s) = \underline{\mathbf{\frac{6}{s}e^{-2s} - \frac{6}{s}e^{-4s}}}$$

Chapter 15, Solution 10.

(a) By taking the derivative in the time domain,

$$g(t) = (-te^{-t} + e^{-t})\cos(t) - te^{-t}\sin(t)$$

$$g(t) = e^{-t}\cos(t) - te^{-t}\cos(t) - te^{-t}\sin(t)$$

$$G(s) = \frac{s+1}{(s+1)^2+1} + \frac{d}{ds}\left[\frac{s+1}{(s+1)^2+1}\right] + \frac{d}{ds}\left[\frac{1}{(s+1)^2+1}\right]$$

$$G(s) = \frac{s+1}{s^2+2s+2} - \frac{s^2+2s}{(s^2+2s+2)^2} - \frac{2s+2}{(s^2+2s+2)^2} = \underline{\mathbf{\frac{s^2(s+2)}{(s^2+2s+2)^2}}}$$

(b) By applying the time differentiation property,

$$G(s) = sF(s) - f(0)$$

where $f(t) = te^{-t}\cos(t)$, $f(0) = 0$

$$G(s) = (s)\cdot\frac{-d}{ds}\left[\frac{s+1}{(s+1)^2+1}\right] = \frac{(s)(s^2+2s)}{(s^2+2s+2)^2} = \underline{\mathbf{\frac{s^2(s+2)}{(s^2+2s+2)^2}}}$$

Chapter 15, Solution 11.

(a) Since $L[\cosh(at)] = \frac{s}{s^2-a^2}$

$$F(s) = \frac{6(s+1)}{(s+1)^2-4} = \underline{\mathbf{\frac{6(s+1)}{s^2+2s-3}}}$$

(b) Since $L[\sinh(at)] = \frac{a}{s^2-a^2}$

$$L[3e^{-2t}\sinh(4t)] = \frac{(3)(4)}{(s+2)^2-16} = \frac{12}{s^2+4s-12}$$

$$F(s) = L[t\cdot 3e^{-2t}\sinh(4t)] = \frac{-d}{ds}[12(s^2+4s-12)^{-1}]$$

$$F(s) = (12)(2s+4)(s^2+4s-12)^{-2} = \underline{\mathbf{\frac{24(s+2)}{(s^2+4s-12)^2}}}$$

(c) $\cosh(t) = \frac{1}{2} \cdot (e^{t} + e^{-t})$

$$f(t) = 8e^{-3t} \cdot \frac{1}{2} \cdot (e^{t} + e^{-t}) u(t-2)$$

$$= 4e^{-2t} u(t-2) + 4e^{-4t} u(t-2)$$
$$= 4e^{-4} e^{-2(t-2)} u(t-2) + 4e^{-8} e^{-4(t-2)} u(t-2)$$

$$L\left[4e^{-4} e^{-2(t-2)} u(t-2)\right] = 4e^{-4} e^{-2s} \cdot L\left[e^{-2} u(t)\right]$$

$$L\left[4e^{-4} e^{-2(t-2)} u(t-2)\right] = \frac{4e^{-(2s+4)}}{s+2}$$

Similarly, $L\left[4e^{-8} e^{-4(t-2)} u(t-2)\right] = \frac{4e^{-(2s+8)}}{s+4}$

Therefore,

$$F(s) = \frac{4e^{-(2s+4)}}{s+2} + \frac{4e^{-(2s+8)}}{s+4} = \underline{\frac{\mathbf{e^{-(2s+6)}\left[(4e^{2} + 4e^{-2})s + (16e^{2} + 8e^{-2})\right]}}{\mathbf{s^{2} + 6s + 8}}}$$

Chapter 15, Solution 12.

$$f(t) = te^{-2(t-1)}e^{-2}u(t-1) = (t-1)e^{-2}e^{-2(t-1)}u(t-1) + e^{-2}e^{-2(t-1)}u(t-1)$$

$$f(s) = e^{-s}\frac{e^{-2}}{(s+2)^{2}} + e^{-2}\frac{e^{-s}}{s+2} = \frac{e^{-(s+2)}}{s+2}\left(1 + \frac{1}{s+2}\right) = \underline{\frac{s+3}{(s+2)^{2}}e^{-(s+2)}}$$

Chapter 15, Solution 13.

(a) $tf(t) \quad \longleftrightarrow \quad -\frac{d}{ds}F(s)$

If f(t) = cost, then $F(s) = \frac{s}{s^{2}+1}$ and $\frac{d}{ds}F(s) = \frac{(s^{2}+1)(1) - s(2s+1)}{(s^{2}+1)^{2}}$

$$\underline{L(t\cos t) = \frac{s^{2}+s-1}{(s^{2}+1)^{2}}}$$

(b) Let f(t) = e^{-t} sin t.

$$F(s) = \frac{1}{(s+1)^2+1} = \frac{1}{s^2+2s+2}$$

$$\frac{dF}{ds} = \frac{(s^2+2s+2)(0)-(1)(2s+2)}{(s^2+2s+2)^2}$$

$$\mathcal{L}(e^{-t}t\sin t) = -\frac{dF}{ds} = \frac{2(s+1)}{(s^2+2s+2)^2}$$

(c) $$\frac{f(t)}{t} \longleftrightarrow \int_s^\infty F(s)ds$$

Let $f(t)=\sin\beta t$, then $F(s)=\dfrac{\beta}{s^2+\beta^2}$

$$\mathcal{L}\left[\frac{\sin\beta t}{t}\right] = \int_s^\infty \frac{\beta}{s^2+\beta^2}ds = \beta\frac{1}{\beta}\tan^{-1}\frac{s}{\beta}\Big|_s^\infty = \frac{\pi}{2}-\tan^{-1}\frac{s}{\beta} = \tan^{-1}\frac{\beta}{s}$$

Chapter 15, Solution 14.

$$f(t) = \begin{cases} 5t & 0<t<1 \\ 10-5t & 1<t<2 \end{cases}$$

We may write $f(t)$ as

$$\begin{aligned} f(t) &= 5t\left[u(t)-u(t-1)\right]+(10-5t)\left[u(t-1)-u(t-2)\right] \\ &= 5t\,u(t)-10(t-1)u(t-1)+5(t-2)u(t-2) \end{aligned}$$

$$F(s) = \frac{5}{s^2}-\frac{10}{s^2}e^{-s}+\frac{5}{s^2}e^{-2s}$$

$$\mathbf{F(s) = \frac{5}{s^2}(1-2e^{-s}+e^{-2s})}$$

Chapter 15, Solution 15.

$$f(t) = 10\left[u(t) - u(t-1) - u(t-1) + u(t-2)\right]$$

$$F(s) = 10\left[\frac{1}{s} - \frac{2}{s}e^{-s} + \frac{e^{-2s}}{s}\right] = \underline{\mathbf{\frac{10}{s}(1 - e^{-s})^2}}$$

Chapter 15, Solution 16.

$$f(t) = 5u(t) - 3u(t-1) + 3u(t-3) - 5u(t-4)$$

$$F(s) = \underline{\mathbf{\frac{1}{s}\left[5 - 3e^{-s} + 3e^{-3s} - 5e^{-4s}\right]}}$$

Chapter 15, Solution 17.

$$f(t) = \begin{cases} 0 & t < 0 \\ t^2 & 0 < t < 1 \\ 1 & 1 < t < 3 \\ 0 & t > 3 \end{cases}$$

$$\begin{aligned} f(t) &= t^2\left[u(t) - u(t-1)\right] + 1\left[u(t-1) - u(t-3)\right] \\ &= t^2 u(t) - (t-1)^2 u(t-1) + (-2t+1)u(t-1) + u(t-1) - u(t-3) \\ &= t^2 u(t) - (t-1)^2 u(t-1) - 2(t-1)u(t-1) - u(t-3) \end{aligned}$$

$$F(s) = \underline{\mathbf{\frac{2}{s^3}(1 - e^{-s}) - \frac{2}{s^2}e^{-s} - \frac{e^{-3s}}{s}}}$$

Chapter 15, Solution 18.

(a) $$\begin{aligned} g(t) &= u(t) - u(t-1) + 2\left[u(t-1) - u(t-2)\right] + 3\left[u(t-2) - u(t-3)\right] \\ &= u(t) + u(t-1) + u(t-2) - 3u(t-3) \end{aligned}$$

$$G(s) = \underline{\mathbf{\frac{1}{s}(1 + e^{-s} + e^{-2s} - 3e^{-3s})}}$$

(b) $$h(t) = 2t\left[u(t) - u(t-1)\right] + 2\left[u(t-1) - u(t-3)\right] + (8-2t)\left[u(t-3) - u(t-4)\right]$$

$$= 2t\,u(t) - 2(t-1)u(t-1) - 2u(t-1) + 2u(t-1) - 2u(t-3) - 2(t-3)u(t-3) + 2u(t-3) + 2(t-4)u(t-4)$$

$$= 2t\,u(t) - 2(t-1)u(t-1) - 2(t-3)u(t-3) + 2(t-4)u(t-4)$$

$$H(s) = \frac{2}{s^2}(1 - e^{-s}) - \frac{2}{s^2}e^{-3s} + \frac{2}{s^2}e^{-4s} = \underline{\mathbf{\frac{2}{s^2}(1 - e^{-s} - e^{-3s} + e^{-4s})}}$$

Chapter 15, Solution 19.

Since $L\left[\delta(t)\right] = 1$ and $T = 2$, $F(s) = \underline{\mathbf{\frac{1}{1 - e^{-2s}}}}$

Chapter 15, Solution 20.

Let $$g_1(t) = \sin(\pi t), \quad 0 < t < 1$$
$$= \sin(\pi t)\left[u(t) - u(t-1)\right]$$
$$= \sin(\pi t)u(t) - \sin(\pi t)u(t-1)$$

Note that $\sin(\pi(t-1)) = \sin(\pi t - \pi) = -\sin(\pi t)$.

So, $g_1(t) = \sin(\pi t)u(t) + \sin(\pi(t-1))u(t-1)$

$$G_1(s) = \frac{\pi}{s^2 + \pi^2}(1 + e^{-s})$$

$$G(s) = \frac{G_1(s)}{1 - e^{-2s}} = \underline{\mathbf{\frac{\pi(1 + e^{-s})}{(s^2 + \pi^2)(1 - e^{-2s})}}}$$

Chapter 15, Solution 21.

$$T = 2\pi$$

Let $f_1(t) = \left(1 - \frac{t}{2\pi}\right)\left[u(t) - u(t-1)\right]$

$$f_1(t) = u(t) - \frac{t}{2\pi}u(t) + \frac{1}{2\pi}(t-1)u(t-1) - \left(1 - \frac{1}{2\pi}\right)u(t-1)$$

$$F_1(s) = \frac{1}{s} - \frac{1}{2\pi s^2} + \frac{e^{-s}}{2\pi s^2} + \left(-1 + \frac{1}{2\pi}\right)e^{-s} \cdot \frac{1}{s} = \frac{\left[2\pi + (-2\pi + 1)e^{-s}\right]s + \left[-1 + e^{-s}\right]}{2\pi s^2}$$

$$F(s) = \frac{F_1(s)}{1 - e^{-Ts}} = \underline{\boldsymbol{\frac{\left[2\pi + (-2\pi + 1)e^{-s}\right]s + \left[-1 + e^{-s}\right]}{2\pi s^2 (1 - e^{-2\pi s})}}}$$

Chapter 15, Solution 22.

(a) Let $g_1(t) = 2t, \quad 0 < t < 1$

$$= 2t\left[u(t) - u(t-1)\right]$$

$$= 2t\,u(t) - 2(t-1)u(t-1) + 2u(t-1)$$

$$G_1(s) = \frac{2}{s^2} - \frac{2e^{-s}}{s^2} + \frac{2}{s}e^{-s}$$

$$G(s) = \frac{G_1(s)}{1 - e^{-sT}}, \quad T = 1$$

$$G(s) = \underline{\boldsymbol{\frac{2(1 - e^{-s} + s e^{-s})}{s^2 (1 - e^{-s})}}}$$

(b) Let $h = h_0 + u(t)$, where h_0 is the periodic triangular wave.

Let h_1 be h_0 within its first period, i.e.

$$h_1(t) = \begin{cases} 2t & 0 < t < 1 \\ 4 - 2t & 1 < t < 2 \end{cases}$$

$$h_1(t) = 2t\,u(t) - 2t\,u(t-1) + 4u(t-1) - 2t\,u(t-1) - 2(t-2)u(t-2)$$

$$h_1(t) = 2t\,u(t) - 4(t-1)u(t-1) - 2(t-2)u(t-2)$$

$$H_1(s) = \frac{2}{s^2} - \frac{4}{s^2}e^{-s} - \frac{2e^{-2s}}{s^2} = \frac{2}{s^2}(1-e^{-s})^2$$

$$H_0(s) = \frac{2}{s^2}\frac{(1-e^{-s})^2}{(1-e^{-2s})}$$

$$\underline{\mathbf{H(s) = \frac{1}{s} + \frac{2}{s^2}\frac{(1-e^{-s})^2}{(1-e^{-2s})}}}$$

Chapter 15, Solution 23.

(a) Let $f_1(t) = \begin{cases} 1 & 0 < t < 1 \\ -1 & 1 < t < 2 \end{cases}$

$$f_1(t) = [u(t) - u(t-1)] - [u(t-1) - u(t-2)]$$
$$f_1(t) = u(t) - 2u(t-1) + u(t-2)$$

$$F_1(s) = \frac{1}{s}(1 - 2e^{-s} + e^{-2s}) = \frac{1}{s}(1-e^{-s})^2$$

$$F(s) = \frac{F_1(s)}{(1-e^{-sT})}, \quad T = 2$$

$$\underline{\mathbf{F(s) = \frac{(1-e^{-s})^2}{s(1-e^{-2s})}}}$$

(b) Let $h_1(t) = t^2[u(t) - u(t-2)] = t^2 u(t) - t^2 u(t-2)$

$$h_1(t) = t^2 u(t) - (t-2)^2 u(t-2) - 4(t-2)u(t-2) - 4u(t-2)$$

$$H_1(s) = \frac{2}{s^3}(1-e^{-2s}) - \frac{4}{s^2}e^{-2s} - \frac{4}{s}e^{-2s}$$

$$H(s) = \frac{H_1(s)}{(1-e^{-Ts})}, \quad T = 2$$

$$\underline{\mathbf{H(s) = \frac{2(1-e^{-2s}) - 4s\,e^{-2s}(s+s^2)}{s^3(1-e^{-2s})}}}$$

Chapter 15, Solution 24.

(a) $$f(0) = \lim_{s\to\infty} sF(s) = \lim_{s\to\infty} \frac{10s^4 + s}{s^2 + 6s + 5}$$

$$= \lim_{s\to\infty} \frac{10 + \frac{1}{s^3}}{\frac{1}{s^2} + \frac{6}{s^3} + \frac{5}{s^4}} = \frac{10}{0} = \underline{\infty}$$

$$f(\infty) = \lim_{s\to 0} sF(s) = \lim_{s\to 0} \frac{10s^4 + s}{s^2 + 6s + 5} = \underline{\mathbf{0}}$$

(b) $$f(0) = \lim_{s\to\infty} sF(s) = \lim_{s\to\infty} \frac{s^2 + s}{s^2 - 4s + 6} = \underline{\mathbf{1}}$$

The complex poles are not in the left-half plane.
$f(\infty)$ **does not exist**

(c) $$f(0) = \lim_{s\to\infty} sF(s) = \lim_{s\to\infty} \frac{2s^3 + 7s}{(s+1)(s+2)(s^2 + 2s + 5)}$$

$$= \lim_{s\to\infty} \frac{\frac{2}{s} + \frac{7}{s^3}}{\left(1 + \frac{1}{s}\right)\left(1 + \frac{2}{s}\right)\left(1 + \frac{2}{s} + \frac{5}{s^2}\right)} = \frac{0}{1} = \underline{\mathbf{0}}$$

$$f(\infty) = \lim_{s\to 0} sF(s) = \lim_{s\to 0} \frac{2s^3 + 7s}{(s+1)(s+2)(s^2 + 2s + 5)} = \frac{0}{10} = \underline{\mathbf{0}}$$

Chapter 15, Solution 25.

(a) $$f(0) = \lim_{s\to\infty} sF(s) = \lim_{s\to\infty} \frac{(8)(s+1)(s+3)}{(s+2)(s+4)}$$

$$= \lim_{s\to\infty} \frac{(8)\left(1+\frac{1}{s}\right)\left(1+\frac{3}{s}\right)}{\left(1+\frac{2}{s}\right)\left(1+\frac{4}{s}\right)} = \underline{\mathbf{8}}$$

$$f(\infty) = \lim_{s\to 0} sF(s) = \lim_{s\to 0} \frac{(8)(1)(3)}{(2)(4)} = \underline{\mathbf{3}}$$

(b) $$f(0) = \lim_{s\to\infty} sF(s) = \lim_{s\to\infty} \frac{6s(s-1)}{s^4-1}$$

$$f(0) = \lim_{s\to\infty} \frac{6\left(\frac{1}{s^2} - \frac{1}{s^4}\right)}{1-\frac{1}{s^4}} = \frac{0}{1} = \underline{\mathbf{0}}$$

All poles are not in the left-half plane.
$f(\infty)$ **does not exist**

Chapter 15, Solution 26.

(a) $$f(0) = \lim_{s\to\infty} sF(s) = \lim_{s\to\infty} \frac{s^3+3s}{s^3+4s^2+6} = \underline{\mathbf{1}}$$

Two poles are not in the left-half plane.
$f(\infty)$ **does not exist**

(b) $f(0) = \lim_{s\to\infty} sF(s) = \lim_{s\to\infty} \frac{s^3 - 2s^2 + s}{(s-2)(s^2 + 2s + 4)}$

$$= \lim_{s\to\infty} \frac{1 - \frac{2}{s} + \frac{1}{s^2}}{\left(1 - \frac{2}{s}\right)\left(1 + \frac{2}{s} + \frac{4}{s^2}\right)} = \underline{\mathbf{1}}$$

One pole is not in the left-half plane.
$f(\infty)$ **does not exist**

Chapter 15, Solution 27.

(a) $f(t) = \underline{\mathbf{u(t) + 2e^{-t}}}$

(b) $G(s) = \frac{3(s+4) - 11}{s+4} = 3 - \frac{11}{s+4}$

$g(t) = \underline{\mathbf{3\delta(t) - 11e^{-4t}}}$

(c) $H(s) = \frac{4}{(s+1)(s+3)} = \frac{A}{s+1} + \frac{B}{s+3}$

$A = 2, \qquad B = -2$

$H(s) = \frac{2}{s+1} - \frac{2}{s+3}$

$h(t) = \underline{\mathbf{2e^{-t} - 2e^{-3t}}}$

(d) $$J(s) = \frac{12}{(s+2)^2(s+4)} = \frac{A}{s+2} + \frac{B}{(s+2)^2} + \frac{C}{s+4}$$

$$B = \frac{12}{2} = 6\,, \quad C = \frac{12}{(-2)^2} = 3$$

$$12 = A(s+2)(s+4) + B(s+4) + C(s+2)^2$$

Equating coefficients :

s^2: $\quad 0 = A + C \longrightarrow A = -C = -3$

s^1: $\quad 0 = 6A + B + 4C = 2A + B \longrightarrow B = -2A = 6$

s^0: $\quad 12 = 8A + 4B + 4C = -24 + 24 + 12 = 12$

$$J(s) = \frac{-3}{s+2} + \frac{6}{(s+2)^2} + \frac{3}{s+4}$$

$$j(t) = \underline{\mathbf{3\,e^{-4t} - 3\,e^{-2t} + 6\,t\,e^{-2t}}}$$

Chapter 15, Solution 28.

(a)

$$F(s) = \frac{\frac{2(-2)}{2}}{s+3} + \frac{\frac{2(-4)}{-2}}{s+5} = \frac{-2}{s+3} + \frac{4}{s+5}$$

$$f(t) = \underline{(-2e^{-3t} + 4e^{-5t})ut(t)}$$

(b)

$$H(s) = \frac{3s+11}{(s+1)(s^2+2s+5)} = \frac{A}{s+1} + \frac{Bs+C}{s^2+2s+5}$$

$$3s + 11 = A(s^2 + 2s + 5) + (Bs + C)(s+1) = (A+B)s^2 + (2A + B + C)s + 5A + C$$

$$5A + C = 11;\ A = -B;\ -B + C = 3,\ B = C - 3 \rightarrow A = 2;\ B = -2;\ C = 1$$

$$H(s) = \frac{2}{s+1} + \frac{-2s+1}{s^2+2s+5} \rightarrow h(t) = \underline{\left(2e^{-t} - 2e^{-t}\cos 2t + 1.5e^{-t}\sin 2t\right)u(t)}$$

Chapter 15, Solution 29.

$$V(s)=\frac{2}{s}+\frac{As+B}{(s+2)^2+3^2};\ 2s^2+8s+26+As^2+Bs=2s+26 \rightarrow A=-2 \text{ and } B=-6$$

$$V(s)=\frac{2}{s}-\frac{2(s+2)}{(s+2)^2+3^2}-\frac{2}{3}\frac{3}{(s+2)^2+3^2}$$

$$v(t)=\underline{2u(t)-2e^{-2t}\cos 3t-\frac{2}{3}e^{-2t}\sin 3t,\ \ t\geq 0}$$

Chapter 15, Solution 30.

(a) $$H_1(s)=\frac{2(s+2)+2}{(s+2)^2+3^2}=\frac{2(s+2)}{(s+2)^2+3^2}+\frac{2}{3}\frac{3}{(s+2)^2+3^2}$$

$$\underline{h_1(t)=2e^{-2t}\cos 3t+\frac{2}{3}e^{-2t}\sin 3t}$$

(b) $$H_2(s)=\frac{s^2+4}{(s+1)^2(s^2+2s+5)}=\frac{A}{(s+1)}+\frac{B}{(s+1)^2}+\frac{Cs\ \ +D}{(s^2+2s+5)}$$

$$s^2+4=A(s+1)(s^2\ \ +2s+5)+B(s^2+2s+5)+Cs(s+1)^2+D(s+1)^2$$

or

$$s^2+4=A(s^3+3s^2+7s+5)+B(s^2+2s+5)+C(s^3+2s^2+s)+D(s^2+2s+1)$$

Equating coefficients:

$s^3:\quad 0=A+C \longrightarrow C=-A$

$s^2:\quad 1=3A+B+2C+D=A+B+D$

$s:\quad 0=7A+2B+C+2D=6A+2B+2D=4A+2 \longrightarrow A=-1/2, C=1/2$

$\text{constant}:\quad 4=5A+5B+D=4A+4B+1 \longrightarrow B=5/4, D=1/4$

$$H_2(s) = \frac{1}{4}\left[\frac{-2}{(s+1)} + \frac{5}{(s+1)^2} + \frac{2s\ \ +1}{(s^2+2s+5)}\right] = \frac{1}{4}\left[\frac{-2}{(s+1)} + \frac{5}{(s+1)^2} + \frac{2(s\ \ +1)-1}{(s+1)^2+2^2)}\right]$$

Hence,

$$\underline{h_2(t) = \frac{1}{4}\left(-2e^{-t} + 5te^{-t} + 2e^{-t}\cos 2t - 0.5e^{-t}\sin 2t\right)u(t)}$$

(c) $$H_3(s) = \frac{(s+2)e^{-s}}{(s\ \ +1)(s+3)} = e^{-s}\left[\frac{A}{(s\ \ +1)} + \frac{B}{(s+3)}\right] = \frac{1}{2}e^{-s}\left[\frac{1}{(s\ \ +1)} + \frac{1}{(s+3)}\right]$$

$$\underline{h_3(t) = \frac{1}{2}\left(e^{-(t-1)} + e^{-3(t-1)}\right)u(t-1)}$$

Chapter 15, Solution 31.

(a) $$F(s) = \frac{10s}{(s+1)(s+2)(s+3)} = \frac{A}{s+1} + \frac{B}{s+2} + \frac{C}{s+3}$$

$$A = F(s)\,(s+1)\big|_{s=-1} = \frac{-10}{2} = -5$$

$$B = F(s)\,(s+2)\big|_{s=-2} = \frac{-20}{-1} = 20$$

$$C = F(s)\,(s+3)\big|_{s=-3} = \frac{-30}{2} = -15$$

$$F(s) = \frac{-5}{s+1} + \frac{20}{s+2} - \frac{15}{s+3}$$

$$f(t) = \underline{\mathbf{-5e^{-t} + 20e^{-2t} - 15e^{-3t}}}$$

(b) $$F(s) = \frac{2s^2+4s+1}{(s+1)(s+2)^3} = \frac{A}{s+1} + \frac{B}{s+2} + \frac{C}{(s+2)^2} + \frac{D}{(s+2)^3}$$

$$A = F(s)\,(s+1)\big|_{s=-1} = -1$$

$$D = F(s)\,(s+2)^3\big|_{s=-2} = -1$$

$$2s^2 + 4s + 1 = A(s+2)(s^2+4s+4) + B(s+1)(s^2+4s+4)$$

$$+ C(s+1)(s+2) + D(s+1)$$

Equating coefficients :

s^3: $\quad 0 = A + B \longrightarrow B = -A = 1$

s^2: $\quad 2 = 6A + 5B + C = A + C \longrightarrow C = 2 - A = 3$

s^1: $\quad 4 = 12A + 8B + 3C + D = 4A + 3C + D$

$\quad 4 = 6 + A + D \longrightarrow D = -2 - A = -1$

s^0: $\quad 1 = 8A + 4B + 2C + D = 4A + 2C + D = -4 + 6 - 1 = 1$

$$F(s) = \frac{-1}{s+1} + \frac{1}{s+2} + \frac{3}{(s+2)^2} - \frac{1}{(s+2)^3}$$

$$f(t) = -e^{-t} + e^{-2t} + 3\,t\,e^{-2t} - \frac{t^2}{2}e^{-2t}$$

$$f(t) = \underline{\mathbf{-\,e^{-t} + \left(1 + 3\,t - \frac{t^2}{2}\right)e^{-2t}}}$$

(c) $$F(s) = \frac{s+1}{(s+2)(s^2+2s+5)} = \frac{A}{s+2} + \frac{Bs+C}{s^2+2s+5}$$

$$A = F(s)\,(s+2)\Big|_{s=-2} = \frac{-1}{5}$$

$$s+1 = A\,(s^2+2s+5) + B\,(s^2+2s) + C\,(s+2)$$

Equating coefficients :

s^2: $\quad 0 = A + B \longrightarrow B = -A = \frac{1}{5}$

s^1: $\quad 1 = 2A + 2B + C = 0 + C \longrightarrow C = 1$

s^0: $\quad 1 = 5A + 2C = -1 + 2 = 1$

$$F(s) = \frac{-1/5}{s+2} + \frac{1/5 \cdot s + 1}{(s+1)^2 + 2^2} = \frac{-1/5}{s+2} + \frac{1/5\,(s+1)}{(s+1)^2 + 2^2} + \frac{4/5}{(s+1)^2 + 2^2}$$

$$f(t) = \underline{\mathbf{-\,0.2\,e^{-2t} + 0.2\,e^{-t}\cos(2t) + 0.4\,e^{-t}\sin(2t)}}$$

Chapter 15, Solution 32.

(a) $$F(s) = \frac{8(s+1)(s+3)}{s(s+2)(s+4)} = \frac{A}{s} + \frac{B}{s+2} + \frac{C}{s+4}$$

$$A = F(s)\,s\Big|_{s=0} = \frac{(8)(3)}{(2)(4)} = 3$$

$$B = F(s)\,(s+2)\Big|_{s=-2} = \frac{(8)(-1)}{(-4)} = 2$$

$$C = F(s)\,(s+4)\Big|_{s=-4} = \frac{(8)(-1)(-3)}{(-4)(-2)} = 3$$

$$F(s) = \frac{3}{s} + \frac{2}{s+2} + \frac{3}{s+4}$$

$$f(t) = \underline{\mathbf{3\,u(t) + 2\,e^{-2t} + 3\,e^{-4t}}}$$

(b) $$F(s) = \frac{s^2 - 2s + 4}{(s+1)(s+2)^2} = \frac{A}{s+1} + \frac{B}{s+2} + \frac{C}{(s+2)^2}$$

$$s^2 - 2s + 4 = A(s^2 + 4s + 4) + B(s^2 + 3s + 2) + C(s+1)$$

Equating coefficients :

s^2: $1 = A + B \longrightarrow B = 1 - A$

s^1: $-2 = 4A + 3B + C = 3 + A + C$

s^0: $4 = 4A + 2B + C = -B - 2 \longrightarrow B = -6$

$A = 1 - B = 7$ $\qquad$ $C = -5 - A = -12$

$$F(s) = \frac{7}{s+1} - \frac{6}{s+2} - \frac{12}{(s+2)^2}$$

$$f(t) = \underline{\mathbf{7\,e^{-t} - 6(1 + 2\,t)\,e^{-2t}}}$$

(c) $$F(s) = \frac{s^2 + 1}{(s+3)(s^2 + 4s + 5)} = \frac{A}{s+3} + \frac{Bs + C}{s^2 + 4s + 5}$$

$$s^2 + 1 = A(s^2 + 4s + 5) + B(s^2 + 3s) + C(s+3)$$

Equating coefficients :

$s^2: \quad 1 = A + B \longrightarrow B = 1 - A$

$s^1: \quad 0 = 4A + 3B + C = 3 + A + C \longrightarrow A + C = -3$

$s^0: \quad 1 = 5A + 3C = -9 + 2A \longrightarrow A = 5$

$B = 1 - A = -4 \qquad C = -A - 3 = -8$

$$F(s) = \frac{5}{s+3} - \frac{4s+8}{(s+2)^2+1} = \frac{5}{s+3} - \frac{4(s+2)}{(s+2)^2+1}$$

$f(t) = \underline{\mathbf{5e^{-3t} - 4e^{-2t}\cos(t)}}$

Chapter 15, Solution 33.

(a) $$F(s) = \frac{6(s-1)}{s^4-1} = \frac{6}{(s^2+1)(s+1)} = \frac{As+B}{s^2+1} + \frac{C}{s+1}$$

$$6 = A(s^2+s) + B(s+1) + C(s^2+1)$$

Equating coefficients :

$s^2: \quad 0 = A + C \longrightarrow A = -C$

$s^1: \quad 0 = A + B \longrightarrow B = -A = C$

$s^0: \quad 6 = B + C = 2B \longrightarrow B = 3$

$A = -3, \qquad B = 3, \qquad C = 3$

$$F(s) = \frac{3}{s+1} + \frac{-3s+3}{s^2+1} = \frac{3}{s+1} + \frac{-3s}{s^2+1} + \frac{3}{s^2+1}$$

$f(t) = \underline{\mathbf{3e^{-t} + 3\sin(t) - 3\cos(t)}}$

(b) $$F(s) = \frac{s\,e^{-\pi s}}{s^2+1}$$

$f(t) = \underline{\mathbf{\cos(t-\pi)\,u(t-\pi)}}$

(c) $$F(s) = \frac{8}{s(s+1)^3} = \frac{A}{s} + \frac{B}{s+1} + \frac{C}{(s+1)^2} + \frac{D}{(s+1)^3}$$

$A = 8, \qquad D = -8$

$$8 = A(s^3 + 3s^2 + 3s + 1) + B(s^3 + 2s^2 + s) + C(s^2 + s) + Ds$$

Equating coefficients :

s^3: $\quad 0 = A + B \longrightarrow B = -A$

s^2: $\quad 0 = 3A + 2B + C = A + C \longrightarrow C = -A = B$

s^1: $\quad 0 = 3A + B + C + D = A + D \longrightarrow D = -A$

s^0: $\quad A = 8, \quad B = -8, \quad C = -8, \quad D = -8$

$$F(s) = \frac{8}{s} - \frac{8}{s+1} - \frac{8}{(s+1)^2} - \frac{8}{(s+1)^3}$$

$$f(t) = \underline{\mathbf{8\left[1 - e^{-t} - t\,e^{-t} - 0.5\,t^2\,e^{-t}\right]u(t)}}$$

Chapter 15, Solution 34.

(a) $$F(s) = 10 + \frac{s^2 + 4 - 3}{s^2 + 4} = 11 - \frac{3}{s^2 + 4}$$

$$f(t) = \underline{\mathbf{11\delta(t) - 1.5\sin(2t)}}$$

(b) $$G(s) = \frac{e^{-s} + 4e^{-2s}}{(s+2)(s+4)}$$

Let $$\frac{1}{(s+2)(s+4)} = \frac{A}{s+2} + \frac{B}{s+4}$$

$A = 1/2 \qquad B = 1/2$

$$G(s) = \frac{e^{-s}}{2}\left(\frac{1}{s+2} + \frac{1}{s+4}\right) + 2e^{-2s}\left(\frac{1}{s+2} + \frac{1}{s+4}\right)$$

$$g(t) = \underline{\mathbf{0.5\left[e^{-2(t-1)} - e^{-4(t-1)}\right]u(t-1) + 2\left[e^{-2(t-2)} - e^{-4(t-2)}\right]u(t-2)}}$$

(c) Let $\dfrac{s+1}{s(s+3)(s+4)} = \dfrac{A}{s} + \dfrac{B}{s+3} + \dfrac{C}{s+4}$

$A = 1/12, \qquad B = 2/3, \qquad C = -3/4$

$$H(s) = \left(\frac{1}{12} \cdot \frac{1}{s} + \frac{2/3}{s+3} - \frac{3/4}{s+4}\right) e^{-2s}$$

$$h(t) = \underline{\left(\frac{\mathbf{1}}{\mathbf{12}} + \frac{\mathbf{2}}{\mathbf{3}} \mathbf{e}^{\mathbf{-3(t-2)}} - \frac{\mathbf{3}}{\mathbf{4}} \mathbf{e}^{\mathbf{-4(t-2)}}\right) \mathbf{u(t-2)}}$$

Chapter 15, Solution 35.

(a) Let $G(s) = \dfrac{s+3}{(s+1)(s+2)} = \dfrac{A}{s+1} + \dfrac{B}{s+2}$

$A = 2, \qquad B = -1$

$$G(s) = \frac{2}{s+1} - \frac{1}{s+2} \longrightarrow g(t) = 2e^{-t} - e^{-2t}$$

$$F(s) = e^{-6s}\, G(s) \longrightarrow f(t) = g(t-6)\, u(t-6)$$
$$f(t) = \underline{\left[\mathbf{2e^{-(t-6)} - e^{-2(t-6)}}\right] \mathbf{u(t-6)}}$$

(b) Let $G(s) = \dfrac{1}{(s+1)(s+4)} = \dfrac{A}{s+1} + \dfrac{B}{s+4}$

$A = 1/3, \qquad B = -1/3$

$$G(s) = \frac{1}{3(s+1)} - \frac{1}{3(s+4)}$$

$$g(t) = \frac{1}{3}\left[e^{-t} - e^{-4t}\right]$$

$$F(s) = 4G(s) - e^{-2t}\, G(s)$$
$$f(t) = 4g(t)\, u(t) - g(t-2)\, u(t-2)$$

$$f(t) = \underline{\frac{\mathbf{4}}{\mathbf{3}}\left[\mathbf{e^{-t} - e^{-4t}}\right] \mathbf{u(t)} - \frac{\mathbf{1}}{\mathbf{3}}\left[\mathbf{e^{-(t-2)} - e^{-4(t-2)}}\right] \mathbf{u(t-2)}}$$

(c) Let $G(s) = \dfrac{s}{(s+3)(s^2+4)} = \dfrac{A}{s+3} + \dfrac{Bs+C}{s^2+4}$

$A = -3/13$

$s = A(s^2+4) + B(s^2+3s) + C(s+3)$

Equating coefficients :

$s^2: \quad 0 = A + B \longrightarrow B = -A$

$s^1: \quad 1 = 3B + C$

$s^0: \quad 0 = 4A + 3C$

$A = -3/13, \quad B = 3/13, \quad C = 4/13$

$$13\,G(s) = \frac{-3}{s+3} + \frac{3s+4}{s^2+4}$$

$13\,g(t) = -3e^{-3t} + 3\cos(2t) + 2\sin(2t)$

$F(s) = e^{-s}\,G(s)$

$f(t) = g(t-1)\,u(t-1)$

$$f(t) = \underline{\mathbf{\frac{1}{13}\left[-3e^{-3(t-1)} + 3\cos(2(t-1)) + 2\sin(2(t-1))\right]u(t-1)}}$$

Chapter 15, Solution 36.

(a) $X(s) = \dfrac{1}{s^2(s+2)(s+3)} = \dfrac{A}{s} + \dfrac{B}{s^2} + \dfrac{C}{s+2} + \dfrac{D}{s+3}$

$B = 1/6, \quad C = 1/4, \quad D = -1/9$

$1 = A(s^3 + 5s^2 + 6s) + B(s^2 + 5s + 6) + C(s^3 + 3s^2) + D(s^3 + 2s^2)$

Equating coefficients :

$s^3: \quad 0 = A + C + D$

$s^2: \quad 0 = 5A + B + 3C + 2D = 3A + B + C$

$s^1: \quad 0 = 6A + 5B$

$s^0: \quad 1 = 6B \longrightarrow B = 1/6$

$A = -5/6 \quad B = -5/36$

$$X(s) = \frac{-5/36}{s} + \frac{1/6}{s^2} + \frac{1/4}{s+2} - \frac{1/9}{s+3}$$

$$x(t) = \underline{\mathbf{\frac{-5}{36} u(t) + \frac{1}{6} t + \frac{1}{4} e^{-2t} - \frac{1}{9} e^{-3t}}}$$

(b) $$Y(s) = \frac{1}{s(s+1)^2} = \frac{A}{s} + \frac{B}{s+1} + \frac{C}{(s+1)^2}$$

$A = 1, \qquad C = -1$

$$1 = A(s^2 + 2s + 1) + B(s^2 + s) + Cs$$

Equating coefficients :

$s^2: \quad 0 = A + B \longrightarrow B = -A$

$s^1: \quad 0 = 2A + B + C = A + C \longrightarrow C = -A$

$s^0: \quad 1 = A, \quad B = -1, \quad C = -1$

$$Y(s) = \frac{1}{s} - \frac{1}{s+1} - \frac{1}{(s+1)^2}$$

$$y(t) = \underline{\mathbf{u(t) - e^{-t} - t\,e^{-t}}}$$

(c) $$Z(s) = \frac{A}{s} + \frac{B}{s+1} + \frac{Cs + D}{s^2 + 6s + 10}$$

$A = 1/10, \qquad B = -1/5$

$$1 = A(s^3 + 7s^2 + 16s + 10) + B(s^3 + 6s^2 + 10s) + C(s^3 + s^2) + D(s^2 + s)$$

Equating coefficients :

$s^3: \quad 0 = A + B + C$

$s^2: \quad 0 = 7A + 6B + C + D = 6A + 5B + D$

$s^1: \quad 0 = 16A + 10B + D = 10A + 5B \longrightarrow B = -2A$

$s^0: \quad 1 = 10A \longrightarrow A = 1/10$

$A = 1/10, \qquad B = -2A = -1/5, \qquad C = A = 1/10, \qquad D = 4A = \frac{4}{10}$

$$10\,Z(s) = \frac{1}{s} - \frac{2}{s+1} + \frac{s+4}{s^2+6s+10}$$

$$10\,Z(s) = \frac{1}{s} - \frac{2}{s+1} + \frac{s+3}{(s+3)^2+1} + \frac{1}{(s+3)^2+1}$$

$$z(t) = \underline{\mathbf{0.1\left[\,1 - 2\,e^{-t} + e^{-3t}\cos(t) + e^{-3t}\sin(t)\right]\;u(t)}}$$

Chapter 15, Solution 37.

(a) Let $P(s) = \dfrac{12}{s(s^2+4)} = \dfrac{A}{s} + \dfrac{Bs+C}{s^2+4}$

$$A = P(s)\,s\big|_{s=0} = 12/4 = 3$$

$$12 = A(s^2+4) + Bs^2 + Cs$$

Equating coefficients :

s^0: $12 = 4A \longrightarrow A = 3$

s^1: $0 = C$

s^2: $0 = A + B \longrightarrow B = -A = -3$

$$P(s) = \frac{3}{s} - \frac{3s}{s^2+4}$$

$$p(t) = 3\,u(t) - 3\cos(2t)$$

$$F(s) = e^{-2s}\,P(s)$$

$$f(t) = \underline{\mathbf{3\left[1 - \cos(2(t-2))\right]u(t-2)}}$$

(b) Let $G(s) = \dfrac{2s+1}{(s^2+1)(s^2+9)} = \dfrac{As+B}{s^2+1} + \dfrac{Cs+D}{s^2+9}$

$$2s + 1 = A(s^3+9s) + B(s^2+9) + C(s^3+s) + D(s^2+1)$$

Equating coefficients :

s^3: $0 = A + C \longrightarrow C = -A$

$$s^2: \quad 0 = B + D \longrightarrow D = -B$$

$$s^1: \quad 2 = 9A + C = 8A \longrightarrow A = 2/8, \quad C = -2/8$$

$$s^0: \quad 1 = 9B + D = 8B \longrightarrow B = 1/8, \quad D = -1/8$$

$$G(s) = \frac{1}{8}\left(\frac{2s+1}{s^2+1}\right) - \frac{1}{8}\left(\frac{2s+1}{s^2+9}\right)$$

$$G(s) = \frac{1}{4}\cdot\frac{s}{s^2+1} + \frac{1}{8}\cdot\frac{1}{s^2+1} - \frac{1}{4}\cdot\frac{s}{s^2+9} - \frac{1}{8}\cdot\frac{1}{s^2+9}$$

$$g(t) = \underline{\mathbf{\frac{1}{4}\cos(t) + \frac{1}{8}\sin(t) - \frac{1}{4}\cos(3t) - \frac{1}{24}\sin(3t)}}$$

(c) Let $H(s) = \dfrac{9s^2}{s^2 + 4s + 13} = 9 - \dfrac{36s + 117}{s^2 + 4s + 13}$

$$H(s) = 9 - 36\cdot\frac{s+2}{(s+2)^2 + 3^2} - 15\cdot\frac{3}{(s+2)^2 + 3^2}$$

$$h(t) = \underline{\mathbf{9\delta(t) - 36e^{-2t}\cos(3t) - 15e^{-2t}\sin(3t)}}$$

Chapter 15, Solution 38.

(a) $F(s) = \dfrac{s^2 + 4s}{s^2 + 10s + 26} = \dfrac{s^2 + 10s + 26 - 6s - 26}{s^2 + 10s + 26}$

$$F(s) = 1 - \frac{6s + 26}{s^2 + 10s + 26}$$

$$F(s) = 1 - \frac{6(s+5)}{(s+5)^2 + 1^2} + \frac{4}{(s+5)^2 + 1^2}$$

$$f(t) = \underline{\mathbf{\delta(t) - 6e^{-t}\cos(5t) + 4e^{-t}\sin(5t)}}$$

(b) $$F(s) = \frac{5s^2 + 7s + 29}{s(s^2 + 4s + 29)} = \frac{A}{s} + \frac{Bs + C}{s^2 + 4s + 29}$$

$$5s^2 + 7s + 29 = A(s^2 + 4s + 29) + Bs^2 + Cs$$

Equating coefficients :

s^0: $29 = 29A \longrightarrow A = 1$

s^1: $7 = 4A + C \longrightarrow C = 7 - 4A = 3$

s^2: $5 = A + B \longrightarrow B = 5 - A = 4$

$A = 1, \quad B = 4, \quad C = 3$

$$F(s) = \frac{1}{s} + \frac{4s + 3}{s^2 + 4s + 29} = \frac{1}{s} + \frac{4(s+2)}{(s+2)^2 + 5^2} - \frac{5}{(s+2)^2 + 5^2}$$

$f(t) =$ $\underline{\mathbf{u(t) + 4e^{-2t}\cos(5t) - e^{-2t}\sin(5t)}}$

Chapter 15, Solution 39.

(a) $$F(s) = \frac{2s^3 + 4s^2 + 1}{(s^2 + 2s + 17)(s^2 + 4s + 20)} = \frac{As + B}{s^2 + 2s + 17} + \frac{Cs + D}{s^2 + 4s + 20}$$

$$s^3 + 4s^2 + 1 = A(s^3 + 4s^2 + 20s) + B(s^2 + 4s + 20)$$
$$+ C(s^3 + 2s^2 + 17s) + D(s^2 + 2s + 17)$$

Equating coefficients :

s^3: $2 = A + C$

s^2: $4 = 4A + B + 2C + D$

s^1: $0 = 20A + 4B + 17C + 2D$

s^0: $1 = 20B + 17D$

Solving these equations (Matlab works well with 4 unknowns),

$A = -1.6, \quad B = -17.8, \quad C = 3.6, \quad D = 21$

$$F(s) = \frac{-1.6s - 17.8}{s^2 + 2s + 17} + \frac{3.6s + 21}{s^2 + 4s + 20}$$

$$F(s) = \frac{(-1.6)(s+1)}{(s+1)^2 + 4^2} + \frac{(-4.05)(4)}{(s+1)^2 + 4^2} + \frac{(3.6)(s+2)}{(s+2)^2 + 4^2} + \frac{(3.45)(4)}{(s+2)^2 + 4^2}$$

$f(t) =$ $\underline{\mathbf{-1.6e^{-t}\cos(4t) - 4.05e^{-t}\sin(4t) + 3.6e^{-2t}\cos(4t) + 3.45e^{-2t}\sin(4t)}}$

(b) $$F(s) = \frac{s^2+4}{(s^2+9)(s^2+6s+3)} = \frac{As+B}{s^2+9} + \frac{Cs+D}{s^2+6s+3}$$

$$s^2+4 = A(s^3+6s^2+3s) + B(s^2+6s+3) + C(s^3+9s) + D(s^2+9)$$

Equating coefficients :

s^3: $\quad 0 = A + C \longrightarrow C = -A$

s^2: $\quad 1 = 6A + B + D$

s^1: $\quad 0 = 3A + 6B + 9C = 6B + 6C \longrightarrow B = -C = A$

s^0: $\quad 4 = 3B + 9D$

Solving these equations,

$A = 1/12, \quad B = 1/12, \quad C = -1/12, \quad D = 5/12$

$$12F(s) = \frac{s+1}{s^2+9} + \frac{-s+5}{s^2+6s+3}$$

$$s^2+6s+3 = 0 \longrightarrow \frac{-6 \pm \sqrt{36-12}}{2} = -0.551, -5.449$$

Let $$G(s) = \frac{-s+5}{s^2+6s+3} = \frac{E}{s+0.551} + \frac{F}{s+5.449}$$

$$E = \frac{-s+5}{s+5.449}\Big|_{s=-0.551} = 1.133$$

$$F = \frac{-s+5}{s+0.551}\Big|_{s=-5.449} = -2.133$$

$$G(s) = \frac{1.133}{s+0.551} - \frac{2.133}{s+5.449}$$

$$12F(s) = \frac{s}{s^2+3^2} + \frac{1}{3}\cdot\frac{3}{s^2+3^2} + \frac{1.133}{s+0.551} - \frac{2.133}{s+5.449}$$

$$f(t) = \underline{\mathbf{0.08333\cos(3t) + 0.02778\sin(3t) + 0.0944\,e^{-0.551t} - 0.1778\,e^{-5.449t}}}$$

Chapter 15, Solution 40.

Let $H(s) = \left[\dfrac{4s^2 + 7s + 13}{(s+2)(s^2 + 2s + 5)}\right] = \dfrac{A}{s+2} + \dfrac{Bs + C}{s^2 + 2s + 5}$

$$4s^2 + 7s + 13 = A(s^2 + 2s + 5) + B(s^2 + 2s) + C(s+2)$$

Equating coefficients gives:

$s^2:\qquad 4 = A + B$

$s:\qquad 7 = 2A + 2B + C \longrightarrow C = -1$

$\text{constant}:\qquad 13 = 5A + 2C \longrightarrow 5A = 15 \text{ or } A = 3,\ B = 1$

$$H(s) = \frac{3}{s+2} + \frac{s-1}{s^2 + 2s + 5} = \frac{3}{s+2} + \frac{(s+1) - 2}{(s+1)^2 + 2^2}$$

Hence,

$$h(t) = 3e^{-2t} + e^{-t}\cos 2t - e^{-t}\sin 2t = 3e^{-2t} + e^{-t}(A\cos\alpha\cos 2t - A\sin\alpha\sin 2t)$$

where $A\cos\alpha = 1, \qquad A\sin\alpha = 1 \longrightarrow A = \sqrt{2}, \qquad \alpha = 45^o$

Thus,

$$h(t) = \underline{\left[\sqrt{2}e^{-t}\cos(2t + 45^o) + 3e^{-2t}\right]u(t)}$$

Chapter 15, Solution 41.

Let $y(t) = f(t)*h(t)$. For $0 < t < 1$,

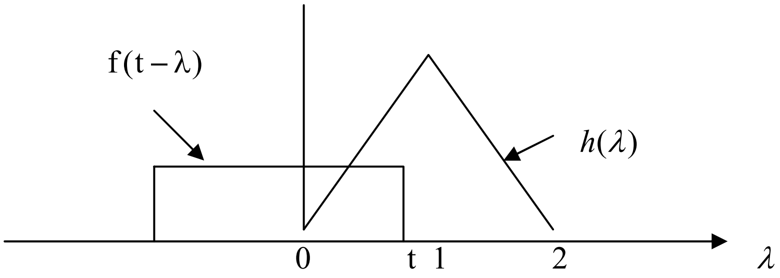

$$y(t) = \int_0^t (1)4\lambda d\lambda = 2\lambda^2 \Big|_0^t = 2t^2$$

For 1 <t<3,

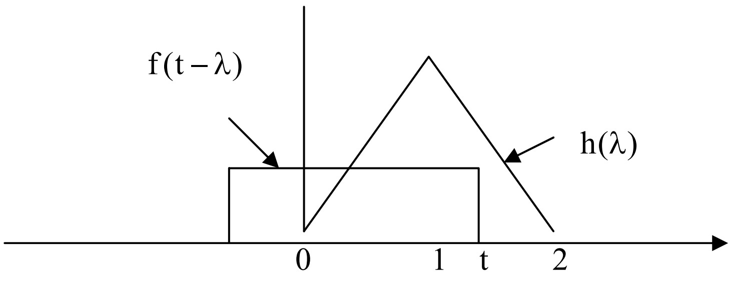

$$y(t)=\int_0^1 (1)4\lambda d\lambda+\int_1^t (1)(8-4\lambda)d\lambda = 2\lambda^2\ \Big|_0^t + (8\lambda-2\lambda^2)\ \Big|_1^t = 8t-2t^2-4$$

For $3<t<4$

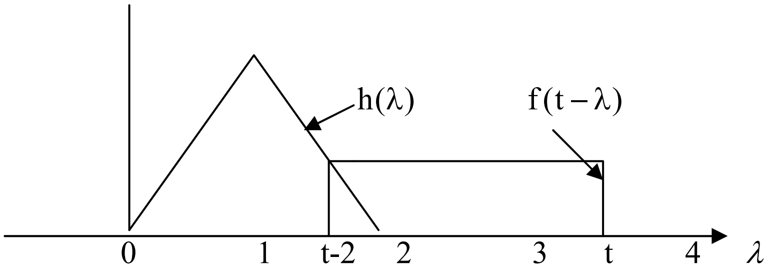

$$y(t)=\int_{t-2}^{2}(8-4\lambda)\lambda d\lambda = 8\lambda-2\lambda^2\ \Big|_{t-2}^{2} = 32-16t+2t^2$$

Thus,

$$y(t)=\begin{cases} 2t^2,\ 0<t<1 \\ 8t\text{ - }2t^2-4,\ 1<t<3 \\ 32\text{ -}16t+2t^2,\ 3<t<4 \\ 0,\ \text{otherwise}\end{cases}$$

Chapter 15, Solution 42.

(a) For $0 < t < 1$, $f_1(t-\lambda)$ and $f_2(\lambda)$ overlap from 0 to t, as shown in Fig. (a).

$$y(t) = f_1(t) * f_2(t) = \int_0^t (1)(\lambda)\, d\lambda = \frac{\lambda^2}{2}\Big|_0^t = \frac{t^2}{2}$$

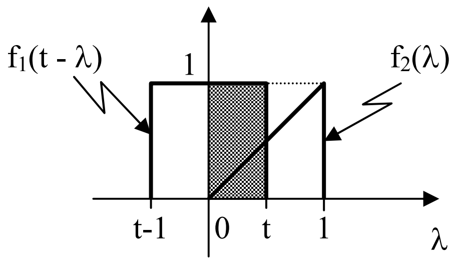

(a)

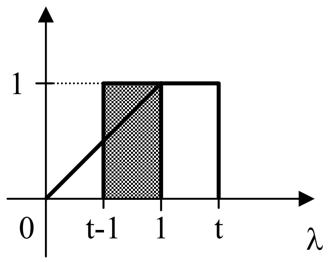

(b)

For $1 < t < 2$, $f_1(t-\lambda)$ and $f_2(\lambda)$ overlap as shown in Fig. (b).

$$y(t) = \int_{t-1}^{1} (1)(\lambda)\, d\lambda = \frac{\lambda^2}{2}\Big|_{t-1}^{1} = t - \frac{t^2}{2}$$

For $t > 2$, there is no overlap.

Therefore,

$$y(t) = \begin{cases} \mathbf{t^2/2,} & \mathbf{0 < t < 1} \\ \mathbf{t - t^2/2,} & \mathbf{1 < t < 2} \\ \mathbf{0,} & \mathbf{otherwise} \end{cases}$$

(b) For $0 < t < 1$, the two functions overlap as shown in Fig. (c).

$$y(t) = f_1(t) * f_2(t) = \int_0^t (1)(1)\, d\lambda = t$$

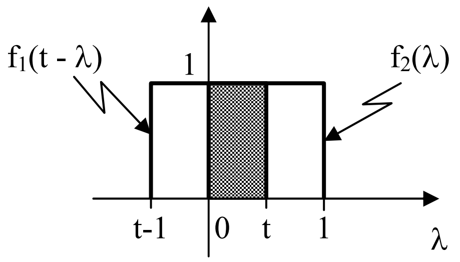

(c)

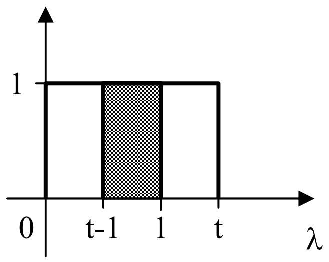

(d)

For $1 < t < 2$, the functions overlap as shown in Fig. (d).

$$y(t) = \int_{t-1}^{1} (1)(1)\, d\lambda = \lambda\Big|_{t-1}^{1} = 2 - t$$

For $t > 2$, there is no overlap.

Therefore,

$$y(t) = \begin{cases} \mathbf{t}, & \mathbf{0 < t < 1} \\ \mathbf{2 - t}, & \mathbf{1 < t < 2} \\ \mathbf{0}, & \textbf{otherwise} \end{cases}$$

(c) For $t < -1$, there is no overlap. For $-1 < t < 0$, $f_1(t-\lambda)$ and $f_2(\lambda)$ overlap as shown in Fig. (e).

$$y(t) = f_1(t) * f_2(t) = \int_{-1}^{t} (1)(\lambda + 1)\, d\lambda = \left(\frac{\lambda^2}{2} + \lambda\right)\Big|_{-1}^{t}$$

$$y(t) = \frac{1}{2}(t^2 + 2t + 1) = \frac{1}{2}(t+1)^2$$

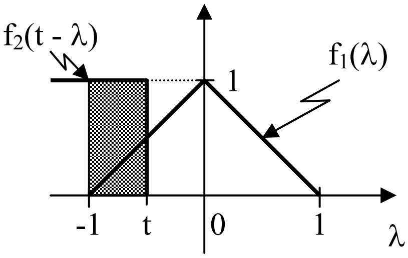

(e)

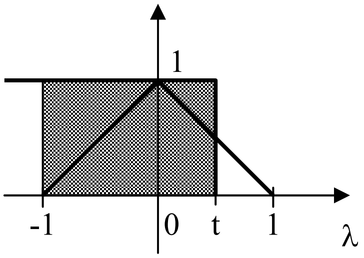

(f)

For $0 < t < 1$, the functions overlap as shown in Fig. (f).

$$y(t) = \int_{-1}^{0} (1)(\lambda + 1)\, d\lambda + \int_{0}^{t} (1)(1 - \lambda)\, d\lambda$$

$$y(t) = \left(\frac{\lambda^2}{2} + \lambda\right)\Big|_{-1}^{0} + \left(\lambda - \frac{\lambda^2}{2}\right)\Big|_{0}^{t}$$

$$y(t) = \frac{1}{2}(1 + 2t - t^2)$$

For $t > 1$, the two functions overlap.

$$y(t) = \int_{-1}^{0} (1)(\lambda+1)\,d\lambda + \int_{0}^{1} (1)(1-\lambda)\,d\lambda$$

$$y(t) = \frac{1}{2} + \left(\lambda - \frac{\lambda^2}{2}\right)\Big|_0^1 = \frac{1}{2} + 1 - \frac{1}{2} = 1$$

Therefore,

$$y(t) = \begin{cases} \mathbf{0}, & \mathbf{t < -1} \\ \mathbf{0.5(t^2 + 2t + 1)}, & \mathbf{-1 < t < 0} \\ \mathbf{0.5(-t^2 + 2t + 1)}, & \mathbf{0 < t < 1} \\ \mathbf{1}, & \mathbf{t > 1} \end{cases}$$

Chapter 15, Solution 43.

(a) For $0 < t < 1$, $x(t-\lambda)$ and $h(\lambda)$ overlap as shown in Fig. (a).

$$y(t) = x(t) * h(t) = \int_0^t (1)(\lambda)\,d\lambda = \frac{\lambda^2}{2}\Big|_0^t = \frac{t^2}{2}$$

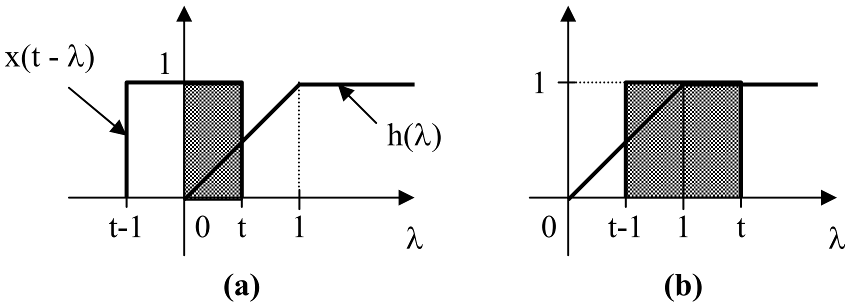

For $1 < t < 2$, $x(t-\lambda)$ and $h(\lambda)$ overlap as shown in Fig. (b).

$$y(t) = \int_{t-1}^{1} (1)(\lambda)\,d\lambda + \int_1^t (1)(1)\,d\lambda = \frac{\lambda^2}{2}\Big|_{t-1}^{1} + \lambda\Big|_1^t = \frac{-1}{2}t^2 + 2t - 1$$

For $t > 2$, there is a complete overlap so that

$$y(t) = \int_{t-1}^{t} (1)(1)\,d\lambda = \lambda\Big|_{t-1}^{t} = t - (t-1) = 1$$

Therefore,

$$y(t) = \begin{cases} \mathbf{t^2/2,} & \mathbf{0 < t < 1} \\ \mathbf{-(t^2/2) + 2t - 1,} & \mathbf{1 < t < 2} \\ \mathbf{1,} & \mathbf{t > 2} \\ \mathbf{0,} & \mathbf{otherwise} \end{cases}$$

(b) For $t > 0$, the two functions overlap as shown in Fig. (c).

$$y(t) = x(t) * h(t) = \int_0^t (1)\, 2\, e^{-\lambda}\, d\lambda = -2\, e^{-\lambda}\Big|_0^t$$

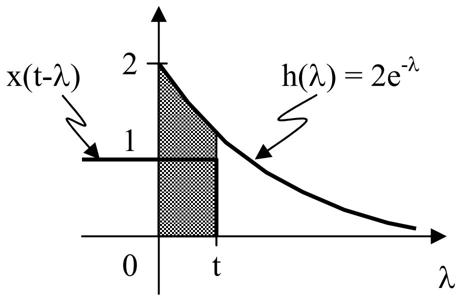

(c)

Therefore,

$$y(t) = \mathbf{2(1 - e^{-t}), \quad t > 0}$$

(c) For $-1 < t < 0$, $x(t-\lambda)$ and $h(\lambda)$ overlap as shown in Fig. (d).

$$y(t) = x(t) * h(t) = \int_0^{t+1} (1)(\lambda)\, d\lambda = \frac{\lambda^2}{2}\Big|_0^{t+1} = \frac{1}{2}(t+1)^2$$

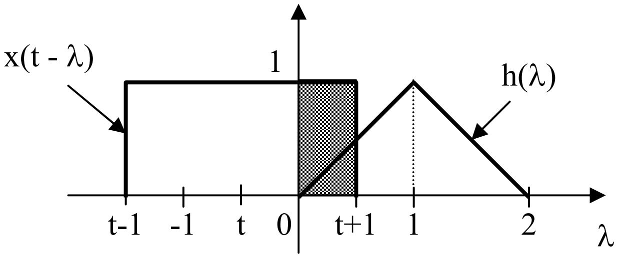

(d)

For $0 < t < 1$, $x(t-\lambda)$ and $h(\lambda)$ overlap as shown in Fig. (e).

$$y(t) = \int_0^1 (1)(\lambda)\, d\lambda + \int_1^{t+1} (1)(2-\lambda)\, d\lambda$$

$$y(t) = \frac{\lambda^2}{2}\Big|_0^1 + \left(2\lambda - \frac{\lambda^2}{2}\right)\Big|_1^{t+1} = \frac{-1}{2}t^2 + t + \frac{1}{2}$$

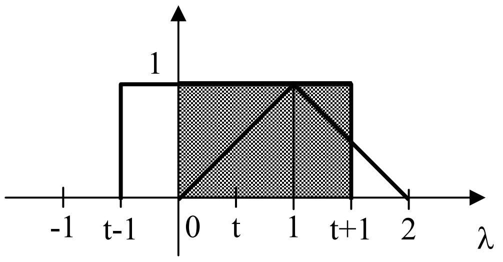

(e)

For $1 < t < 2$, $x(t-\lambda)$ and $h(\lambda)$ overlap as shown in Fig. (f).

$$y(t) = \int_{t-1}^{1} (1)(\lambda)\, d\lambda + \int_{1}^{2} (1)(2-\lambda)\, d\lambda$$

$$y(t) = \frac{\lambda^2}{2}\Big|_{t-1}^{1} + \left(2\lambda - \frac{\lambda^2}{2}\right)\Big|_1^{2} = \frac{-1}{2}t^2 + t + \frac{1}{2}$$

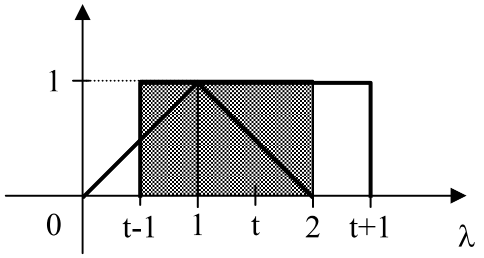

(f)

For $2 < t < 3$, $x(t-\lambda)$ and $h(\lambda)$ overlap as shown in Fig. (g).

$$y(t) = \int_{t-1}^{2} (1)(2-\lambda)\, d\lambda = \left(2\lambda - \frac{\lambda^2}{2}\right)\Big|_{t-1}^{2} = \frac{9}{2} - 3t + \frac{1}{2}t^2$$

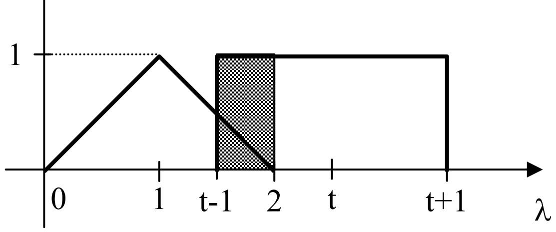

(g)

Therefore,

$$y(t) = \begin{cases} \mathbf{(t^2/2) + t + 1/2}, & \mathbf{-1 < t < 0} \\ \mathbf{-(t^2/2) + t + 1/2}, & \mathbf{0 < t < 2} \\ \mathbf{(t^2/2) - 3t + 9/2}, & \mathbf{2 < t < 3} \\ \mathbf{0}, & \mathbf{otherwise} \end{cases}$$

Chapter 15, Solution 44.

(a) For $0 < t < 1$, $x(t-\lambda)$ and $h(\lambda)$ overlap as shown in Fig. (a).

$$y(t) = x(t) * h(t) = \int_0^t (1)(1)\, d\lambda = t$$

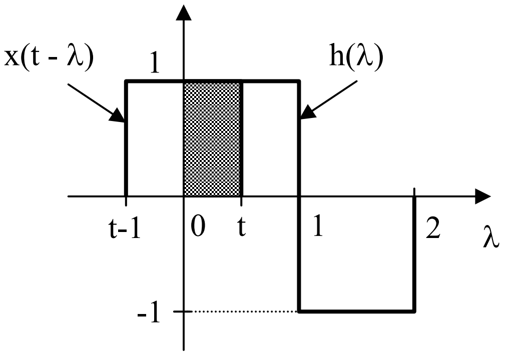

(a)

For $1 < t < 2$, $x(t-\lambda)$ and $h(\lambda)$ overlap as shown in Fig. (b).

$$y(t) = \int_{t-1}^{1} (1)(1)\, d\lambda + \int_1^t (-1)(1)\, d\lambda = \lambda\Big|_{t-1}^{1} - \lambda\Big|_1^t = 3 - 2t$$

For $2 < t < 3$, $x(t-\lambda)$ and $h(\lambda)$ overlap as shown in Fig. (c).

$$y(t) = \int_{t-1}^{2} (1)(-1)\, d\lambda = -\lambda\Big|_{t-1}^{2} = t - 3$$

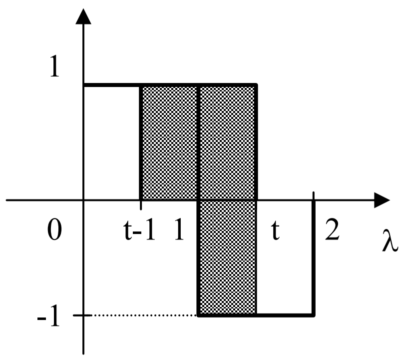

(b)

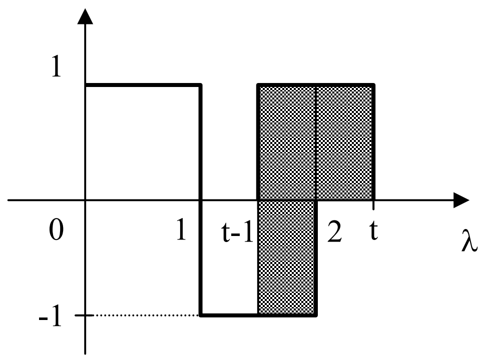

(c)

Therefore,

$$y(t) = \begin{cases} \mathbf{t}, & \mathbf{0 < t < 1} \\ \mathbf{3 - 2t}, & \mathbf{1 < t < 2} \\ \mathbf{t - 3}, & \mathbf{2 < t < 3} \\ \mathbf{0}, & \mathbf{otherwise} \end{cases}$$

(b) For $t < 2$, there is no overlap. For $2 < t < 3$, $f_1(t - \lambda)$ and $f_2(\lambda)$ overlap, as shown in Fig. (d).

$$y(t) = f_1(t) * f_2(t) = \int_2^t (1)(t - \lambda)\, d\lambda$$

$$= \left(\lambda t - \frac{\lambda^2}{2} \right) \Big|_2^t = \frac{t^2}{2} - 2t + 2$$

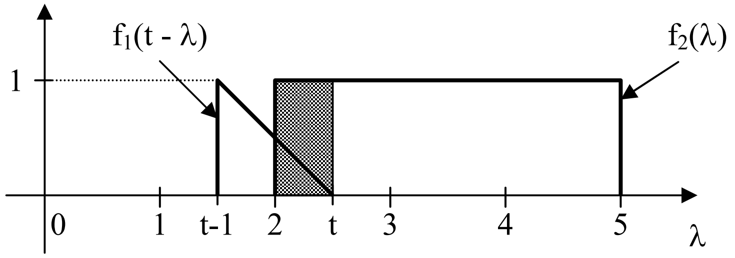

(d)

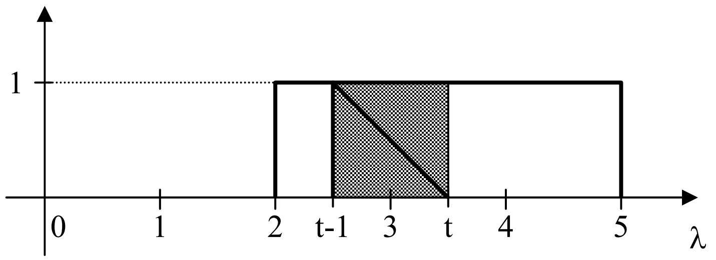

(e)

For $3 < t < 5$, $f_1(t-\lambda)$ and $f_2(\lambda)$ overlap as shown in Fig. (e).

$$y(t) = \int_{t-1}^{t} (1)(t-\lambda)\, d\lambda = \left(\lambda t - \frac{\lambda^2}{2}\right)\Bigg|_{t-1}^{t} = \frac{1}{2}$$

For $5 < t < 6$, the functions overlap as shown in Fig. (f).

$$y(t) = \int_{t-1}^{5} (1)(t-\lambda)\, d\lambda = \left(\lambda t - \frac{\lambda^2}{2}\right)\Bigg|_{t-1}^{5} = \frac{-1}{2}t^2 + 5t - 12$$

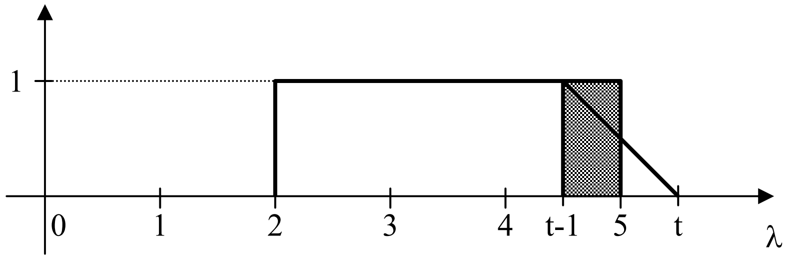

(f)

Therefore,

$$y(t) = \begin{cases} \mathbf{(t^2/2) - 2t + 2,} & \mathbf{2 < t < 3} \\ \mathbf{1/2,} & \mathbf{3 < t < 5} \\ \mathbf{-(t^2/2) + 5t - 12,} & \mathbf{5 < t < 6} \\ \mathbf{0,} & \mathbf{otherwise} \end{cases}$$

Chapter 15, Solution 45.

(a) $f(t) * \delta(t) = \int_0^t f(\lambda)\delta(t-\lambda)\, d\lambda = f(\lambda)\Big|_{\lambda=t}$

$\mathbf{f(t) * \delta(t) = f(t)}$

(b) $f(t) * u(t) = \int_0^t f(\lambda) u(t-\lambda)\, d\lambda$

Since $u(t-\lambda) = \begin{cases} 1 & \lambda < t \\ 0 & \lambda > t \end{cases}$

$$\mathbf{f(t) * u(t) = \int_o^t f(\lambda)\, d\lambda}$$

Alternatively,

$$\mathcal{L}\{f(t) * u(t)\} = \frac{F(s)}{s}$$

$$\mathcal{L}^{-1}\left\{\frac{F(s)}{s}\right\} = f(t) * u(t) = \int_o^t f(\lambda)\, d\lambda$$

Chapter 15, Solution 46.

(a) Let $y(t) = x_1(t) * x_2(t) = \int_0^t x_2(t)\, x_1(t-\lambda)\, d\lambda$

For $0 < t < 3$, $x_1(t-\lambda)$ and $x_2(\lambda)$ overlap as shown in Fig. (a).

$$y(t) = \int_0^t 4e^{-2\lambda}\, e^{-(t-\lambda)}\, d\lambda = 4e^{-t}\int_0^t e^{-\lambda}\, d\lambda = 4(e^{-t} - e^{-2t})$$

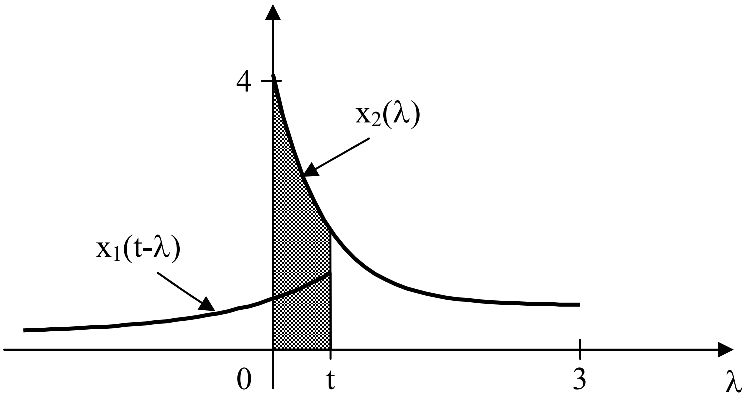

(a)

For $t > 3$, the two functions overlap as shown in Fig. (b).

$$y(t) = \int_0^3 4e^{-2\lambda}\, e^{-(t-\lambda)}\, d\lambda = 4e^{-t}\left(-e^{-\lambda}\right)\Big|_0^3 = 4e^{-t}(1 - e^{-3})$$

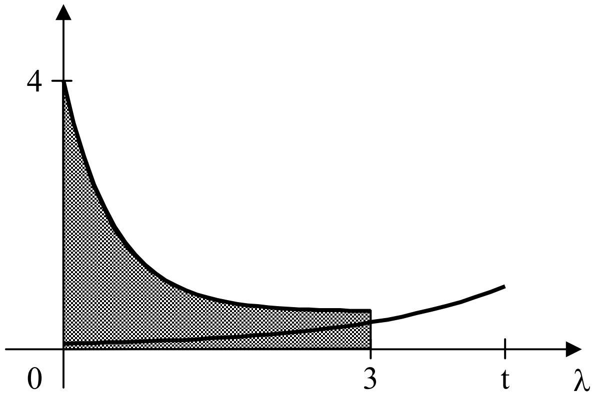

(b)

Therefore,

$$y(t) = \begin{cases} \mathbf{4(e^{-t} - e^{-2t}),} & \mathbf{0 < t < 3} \\ \mathbf{4e^{-t}(1 - e^{-3}),} & \mathbf{t > 3} \end{cases}$$

(b) For $1 < t < 2$, $x_1(\lambda)$ and $x_2(t-\lambda)$ overlap as shown in Fig. (c).

$$y(t) = x_1(t) * x_2(t) = \int_1^t (1)(1)\, d\lambda = \lambda\Big|_1^t = t - 1$$

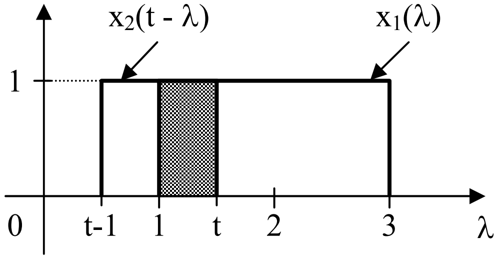

(c)

For $2 < t < 3$, the two functions overlap completely.

$$y(t) = \int_{t-1}^{t} (1)(1)\, d\lambda = \lambda\Big|_{t-1}^{t} = t - (t-1) = 1$$

For $3 < t < 4$, the two functions overlap as shown in Fig. (d).

$$y(t) = \int_{t-1}^{3} (1)(1)\, d\lambda = \lambda\Big|_{t-1}^{3} = 4 - t$$

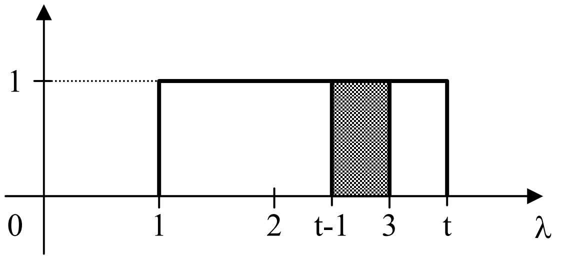

(d)

Therefore,

$$y(t) = \begin{cases} \mathbf{t - 1,} & \mathbf{1 < t < 2} \\ \mathbf{1,} & \mathbf{2 < t < 3} \\ \mathbf{4 - t,} & \mathbf{3 < t < 4} \\ \mathbf{0,} & \mathbf{otherwise} \end{cases}$$

(c) For $-1 < t < 0$, $x_1(t-\lambda)$ and $x_2(\lambda)$ overlap as shown in Fig. (e).

$$y(t) = x_1(t) * x_2(t) = \int_{-1}^{t} (1)\, 4\, e^{-(t-\lambda)}\, d\lambda$$

$$y(t) = 4\,e^{-t}\int_{-1}^{t} e^{\lambda}\, d\lambda = 4\left[1 - e^{-(t+1)}\right]$$

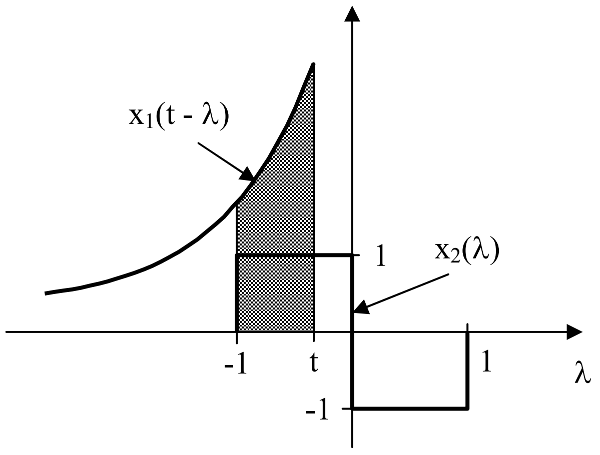

(e)

For $0 < t < 1$,

$$y(t) = \int_{-1}^{0} (1)\,4\,e^{-(t-\lambda)}\, d\lambda + \int_{0}^{t} (-1)\,4\,e^{-(t-\lambda)}\, d\lambda$$

$$y(t) = 4\,e^{-t}\, e^{\lambda}\Big|_{-1}^{0} - 4\,e^{-t}\, e^{\lambda}\Big|_{0}^{t} = 8\,e^{-t} - 4\,e^{-(t+1)} - 4$$

For $t > 1$, the two functions overlap completely.

$$y(t) = \int_{-1}^{0} (1)\,4\,e^{-(t-\lambda)}\, d\lambda + \int_{0}^{1} (-1)\,4\,e^{-(t-\lambda)}\, d\lambda$$

$$y(t) = 4\,e^{-t}\, e^{\lambda}\Big|_{-1}^{0} - 4\,e^{-t}\, e^{\lambda}\Big|_{0}^{1} = 8\,e^{-t} - 4\,e^{-(t+1)} - 4\,e^{-(t-1)}$$

Therefore,

$$y(t) = \begin{cases} \mathbf{4\left[1 - e^{-(t+1)}\right],} & \mathbf{-1 < t < 0} \\ \mathbf{8\,e^{-t} - 4\,e^{-(t+1)} - 4,} & \mathbf{0 < t < 1} \\ \mathbf{8\,e^{-t} - 4\,e^{-(t+1)} - 4\,e^{-(t-1)},} & \mathbf{t > 1} \end{cases}$$

Chapter 15, Solution 47.

$$f_1(t) = f_2(t) = \cos(t)$$

$$L^{-1}\left[\,F_1(s)\,F_2(s)\right] = \int_{0}^{t} \cos(\lambda)\cos(t - \lambda)\, d\lambda$$

$$\cos(A)\cos(B) = \frac{1}{2}\left[\cos(A + B) + \cos(A - B)\right]$$

$$L^{-1}\left[F_1(s)F_2(s)\right] = \frac{1}{2}\int_0^t [\cos(t) + \cos(t - 2\lambda)]\, d\lambda$$

$$L^{-1}\left[F_1(s)F_2(s)\right] = \frac{1}{2}\cos(t)\cdot \lambda\Big|_0^t + \frac{1}{2}\cdot\frac{\sin(t-2\lambda)}{-2}\Big|_0^t$$

$$L^{-1}\left[F_1(s)F_2(s)\right] = \underline{\mathbf{0.5\, t\cos(t) + 0.5\sin(t)}}$$

Chapter 15, Solution 48.

(a) Let $G(s) = \dfrac{2}{s^2 + 2s + 5} = \dfrac{2}{(s+1)^2 + 2^2}$

$$g(t) = e^{-t}\sin(2t)$$

$$F(s) = G(s)\,G(s)$$

$$f(t) = L^{-1}\left[G(s)\,G(s)\right] = \int_0^t g(\lambda)\,g(t-\lambda)\, d\lambda$$

$$f(t) = \int_0^t e^{-\lambda}\sin(2\lambda)\,e^{-(t-\lambda)}\sin(2(t-\lambda))\, d\lambda$$

$$\sin(A)\sin(B) = \frac{1}{2}\left[\cos(A-B) - \cos(A+B)\right]$$

$$f(t) = \frac{1}{2}e^{-t}\int_0^t e^{-\lambda}\left[\cos(2t) - \cos(2(t-2\lambda))\right] d\lambda$$

$$f(t) = \frac{e^{-t}}{2}\cos(2t)\int_0^t e^{-2\lambda}\, d\lambda - \frac{e^{-t}}{2}\int_0^t e^{-2\lambda}\cos(2t - 4\lambda)\, d\lambda$$

$$f(t) = \frac{e^{-t}}{2}\cos(2t)\cdot\frac{e^{-2\lambda}}{-2}\Big|_0^t - \frac{e^{-t}}{2}\int_0^t e^{-2\lambda}\left[\cos(2t)\cos(4\lambda) + \sin(2t)\sin(4\lambda)\right] d\lambda$$

$$f(t) = \frac{1}{4}e^{-t}\cos(2t)\,(-e^{-2t} + 1) - \frac{e^{-t}}{2}\cos(2t)\int_0^t e^{-2\lambda}\cos(4\lambda)\, d\lambda$$

$$-\frac{e^{-t}}{2}\sin(2t)\int_0^t e^{-2\lambda}\sin(4\lambda)\, d\lambda$$

$$f(t) = \frac{1}{4} e^{-t} \cos(2t)\,(1 - e^{-2t})$$

$$- \frac{e^{-t}}{2} \cos(2t) \left[\frac{e^{-2\lambda}}{4+16} \left(-2\cos(4\lambda) - 4\sin(4\lambda) \right) \right] \Big|_0^t$$

$$- \frac{e^{-t}}{2} \sin(2t) \left[\frac{e^{-2\lambda}}{4+16} \left(-2\sin(4\lambda) + 4\cos(4\lambda) \right) \right] \Big|_0^t$$

$$f(t) = \underline{\mathbf{\frac{e^{-t}}{2} \cos(2t) - \frac{e^{-3t}}{4} \cos(2t) - \frac{e^{-t}}{20} \cos(2t) + \frac{e^{-3t}}{20} \cos(2t)\cos(4t)}}$$

$$\underline{\mathbf{+ \frac{e^{-3t}}{10} \cos(2t)\sin(4t) + \frac{e^{-t}}{10} \sin(2t)}}$$

$$\underline{\mathbf{+ \frac{e^{-t}}{20} \sin(2t)\sin(4t) - \frac{e^{-t}}{10} \sin(2t)\cos(4t)}}$$

(b) Let $X(s) = \dfrac{2}{s+1}$, $\qquad Y(s) = \dfrac{s}{s+4}$

$$x(t) = 2e^{-t}\,u(t), \qquad y(t) = \cos(2t)\,u(t)$$

$$F(s) = X(s)\,Y(s)$$

$$f(t) = \mathcal{L}^{-1}\left[X(s)\,Y(s) \right] = \int_0^{\infty} y(\lambda)\,x(t-\lambda)\,d\lambda$$

$$f(t) = \int_0^t \cos(2\lambda) \cdot 2e^{-(t-\lambda)}\,d\lambda$$

$$f(t) = 2e^{-t} \cdot \frac{e^{\lambda}}{1+4} \left(\cos(2\lambda) + 2\sin(2\lambda) \right) \Big|_0^t$$

$$f(t) = \frac{2}{5} e^{-t} \left[e^{t} \left(\cos(2t) + 2\sin(2t) - 1 \right) \right]$$

$$f(t) = \underline{\mathbf{\frac{2}{5} \cos(2t) + \frac{4}{5} \sin(2t) - \frac{2}{5} e^{-t}}}$$

Chapter 15, Solution 49.

Let x(t) = u(t) – u(t-1) and y(t) = h(t)*x(t).

$$y(t) = L^{-1}[H(s)X(s)] = L^{-1}\left[\frac{4}{s+2}\left(\frac{1}{s} - \frac{e^{-s}}{s}\right)\right] = L^{-1}\left[\frac{4(1-e^{-s})}{s(s+2)}\right]$$

But

$$\frac{1}{s(s+2)} = \frac{A}{s} + \frac{B}{s+2} = \frac{1}{2}\left[\frac{1}{s} - \frac{1}{s+2}\right]$$

$$Y(s) = 2\left[\frac{1}{s} - \frac{1}{s+2} - \frac{e^{-s}}{s} + \frac{e^{-s}}{s+2}\right]$$

$$y(t) = \underline{2[1-e^{-2t}]u(t) - 4[1-e^{-2(t-1)}]u(t-1)}$$

Chapter 15, Solution 50.

Take the Laplace transform of each term.

$$\left[s^2\,V(s) - s\,v(0) - v'(0)\right] + 2\left[s\,V(s) - v(0)\right] + 10\,V(s) = \frac{3s}{s^2+4}$$

$$s^2\,V(s) - s + 2 + 2s\,V(s) - 2 + 10\,V(s) = \frac{3s}{s^2+4}$$

$$(s^2 + 2s + 10)\,V(s) = s + \frac{3s}{s^2+4} = \frac{s^3+7s}{s^2+4}$$

$$V(s) = \frac{s^3+7s}{(s^2+4)(s^2+2s+10)} = \frac{As+B}{s^2+4} + \frac{Cs+D}{s^2+2s+10}$$

$$s^3 + 7s = A\,(s^3 + 2s^2 + 10s) + B\,(s^2 + 2s + 10) + C\,(s^3 + 4s) + D\,(s^2 + 4)$$

Equating coefficients :

s^3: $\quad 1 = A + C \longrightarrow C = 1 - A$

s^2: $\quad 0 = 2A + B + D$

s^1: $\quad 7 = 10A + 2B + 4C = 6A + 2B + 4$

$$s^0: \quad 0 = 10B + 4D \longrightarrow D = -2.5B$$

Solving these equations yields

$$A = \frac{9}{26}, \qquad B = \frac{12}{26}, \qquad C = \frac{17}{26}, \qquad D = \frac{-30}{26}$$

$$V(s) = \frac{1}{26}\left[\frac{9s+12}{s^2+4} + \frac{17s-30}{s^2+2s+10}\right]$$

$$V(s) = \frac{1}{26}\left[\frac{9s}{s^2+4} + 6\cdot\frac{2}{s^2+4} + 17\cdot\frac{s+1}{(s+1)^2+3^2} - \frac{47}{(s+1)^2+3^2}\right]$$

$$\underline{\mathbf{v(t) = \frac{9}{26}\cos(2t) + \frac{6}{26}\sin(2t) + \frac{17}{26}e^{-t}\cos(3t) - \frac{47}{78}e^{-t}\sin(3t)}}$$

Chapter 15, Solution 51.

Taking the Laplace transform of the differential equation yields

$$\left[s^2V(s) - sv(0) - v'(0)\right] + 5[sV(s) - v(0)]] + 6V(s) = \frac{10}{s+1}$$

or $\left(s^2 + 5s + 6\right)V(s) - 2s - 4 - 10 = \frac{10}{s+1} \longrightarrow V(s) = \frac{2s^2 + 16s + 24}{(s+1)(s+2)(s+3)}$

Let $V(s) = \frac{A}{s+1} + \frac{B}{s+2} + \frac{C}{s+3}$, $\quad A = 5, \quad B = 0, \quad C = -3$

Hence,

$$v(t) = \underline{(5e^{-t} - 3e^{-3t})u(t)}$$

Chapter 15, Solution 52.

Take the Laplace transform of each term.

$$\left[s^2\, I(s) - s\, i(0) - i'(0)\right] + 3\left[s\, I(s) - i(0)\right] + 2\, I(s) + 1 = 0$$

$$(s^2 + 3s + 2)\, I(s) - s - 3 - 3 + 1 = 0$$

$$I(s) = \frac{s+5}{(s+1)(s+2)} = \frac{A}{s+1} + \frac{B}{s+2}$$

$$A = 4, \qquad B = -3$$

$$I(s) = \frac{4}{s+1} - \frac{3}{s+2}$$

$$i(t) = \underline{\mathbf{(4\,e^{-t} - 3\,e^{-2t})\,u(t)}}$$

Chapter 15, Solution 53.

Take the Laplace transform of each term.

$$\left[s^2\, Y(s) - s\, y(0) - y'(0)\right] + 5\left[s\, Y(s) - y(0)\right] + 6\, V(s) = \frac{s}{s^2+4}$$

$$(s^2 + 5s + 6)\, Y(s) - s - 4 - 5 = \frac{s}{s^2+4}$$

$$(s^2 + 5s + 6)\, Y(s) = s + 9 + \frac{s}{s^2+4} = \frac{s + (s+9)(s^2+4)}{s^2+4}$$

$$Y(s) = \frac{s^3 + 9s^2 + 5s + 36}{(s+2)(s+3)(s^2+4)} = \frac{A}{s+2} + \frac{B}{s+3} + \frac{Cs + D}{s^2+4}$$

$$A = (s+2)\, Y(s)\Big|_{s=-2} = \frac{27}{4}, \qquad B = (s+3)\, Y(s)\Big|_{s=-3} = \frac{-75}{13}$$

When $s = 0$,

$$\frac{36}{(2)(3)(4)} = \frac{A}{2} + \frac{B}{3} + \frac{D}{4} \longrightarrow D = \frac{5}{26}$$

When $s = 1$,

$$\frac{46+5}{(12)(5)} = \frac{A}{3} + \frac{B}{4} + \frac{C}{5} + \frac{D}{5} \longrightarrow C = \frac{1}{52}$$

Thus, $Y(s) = \dfrac{27/4}{s+2} - \dfrac{75/13}{s+3} + \dfrac{1/52 \cdot s + 5/26}{s^2+4}$

$$y(t) = \underline{\mathbf{\frac{27}{4} e^{-2t} - \frac{75}{13} e^{-3t} + \frac{1}{52}\cos(2t) + \frac{5}{52}\sin(2t)}}$$

Chapter 15, Solution 54.

Taking the Laplace transform of the differential equation gives

$$\left[s^2\, V(s) - s\, v(0) - v'(0) \right] + 3\left[s\, V(s) - v(0) \right] + 2\, V(s) = \frac{5}{s+3}$$

$$(s^2 + 3s + 2)\, V(s) = \frac{5}{s+3} - 1 = \frac{2-s}{s+3}$$

$$V(s) = \frac{2-s}{(s+3)(s^2+3s+2)} = \frac{2-s}{(s+1)(s+2)(s+3)}$$

$$V(s) = \frac{A}{s+1} + \frac{B}{s+2} + \frac{C}{s+3}$$

$A = 3/2$, $B = -4$, $C = 5/2$

$$V(s) = \frac{3/2}{s+1} - \frac{4}{s+2} + \frac{5/2}{s+3}$$

$$v(t) = \underline{\mathbf{(1.5 e^{-t} - 4 e^{-2t} + 2.5 e^{-3t})\, u(t)}}$$

Chapter 15, Solution 55.

Take the Laplace transform of each term.

$$\left[s^3\,Y(s) - s^2\,y(0) - s\,y'(0) - y''(0)\right] + 6\left[s^2\,Y(s) - s\,y(0) - y'(0)\right]$$

$$+\,8\left[s\,Y(s) - y(0)\right] = \frac{s+1}{(s+1)^2 + 2^2}$$

Setting the initial conditions to zero gives

$$(s^3 + 6s^2 + 8s)\,Y(s) = \frac{s+1}{s^2 + 2s + 5}$$

$$Y(s) = \frac{(s+1)}{s\,(s+2)(s+4)(s^2+2s+5)} = \frac{A}{s} + \frac{B}{s+2} + \frac{C}{s+4} + \frac{Ds+E}{s^2+2s+5}$$

$$A = \frac{1}{40}, \qquad B = \frac{1}{20}, \qquad C = \frac{-3}{104}, \qquad D = \frac{-3}{65}, \qquad E = \frac{-7}{65}$$

$$Y(s) = \frac{1}{40}\cdot\frac{1}{s} + \frac{1}{20}\cdot\frac{1}{s+2} - \frac{3}{104}\cdot\frac{1}{s+4} - \frac{1}{65}\cdot\frac{3s+7}{(s+1)^2+2^2}$$

$$Y(s) = \frac{1}{40}\cdot\frac{1}{s} + \frac{1}{20}\cdot\frac{1}{s+2} - \frac{3}{104}\cdot\frac{1}{s+4} - \frac{1}{65}\cdot\frac{3(s+1)}{(s+1)^2+2^2} - \frac{1}{65}\cdot\frac{4}{(s+1)^2+2^2}$$

$$y(t) = \underline{\mathbf{\frac{1}{40}u(t) + \frac{1}{20}e^{-2t} - \frac{3}{104}e^{-4t} - \frac{3}{65}e^{-t}\cos(2t) - \frac{2}{65}e^{-t}\sin(2t)}}$$

Chapter 15, Solution 56.

Taking the Laplace transform of each term we get:

$$4\left[s\,V(s) - v(0)\right] + \frac{12}{s}V(s) = 0$$

$$\left[4s + \frac{12}{s}\right]V(s) = 8$$

$$V(s) = \frac{8s}{4s^2 + 12} = \frac{2s}{s^2 + 3}$$

$$v(t) = \underline{\mathbf{2\cos\left(\sqrt{3}t\right)}}$$

Chapter 15, Solution 57.

Take the Laplace transform of each term.

$$\left[\,s\,Y(s) - y(0)\right] + \frac{9}{s}Y(s) = \frac{s}{s^2+4}$$

$$\left(\frac{s^2+9}{s}\right)Y(s) = 1 + \frac{s}{s^2+4} = \frac{s^2+s+4}{s^2+4}$$

$$Y(s) = \frac{s^3+s^2+4s}{(s^2+4)(s^2+9)} = \frac{As+B}{s^2+4} + \frac{Cs+D}{s^2+9}$$

$$s^3+s^2+4s = A\,(s^3+9s) + B\,(s^2+9) + C\,(s^3+4s) + D\,(s^2+4)$$

Equating coefficients :

s^0 : $\quad 0 = 9B + 4D$

s^1 : $\quad 4 = 9A + 4C$

s^2 : $\quad 1 = B + D$

s^3 : $\quad 1 = A + C$

Solving these equations gives

$$A = 0, \qquad B = -4/5, \qquad C = 1, \qquad D = 9/5$$

$$Y(s) = \frac{-4/5}{s^2+4} + \frac{s+9/5}{s^2+9} = \frac{-4/5}{s^2+4} + \frac{s}{s^2+9} + \frac{9/5}{s^2+9}$$

$$y(t) = \underline{\mathbf{-\,0.4\sin(2t) + \cos(3t) + 0.6\sin(3t)}}$$

Chapter 15, Solution 58.

We take the Laplace transform of each term and obtain

$$6V(s) + [sV(s) - v(0)] + \frac{10}{s}V(s) = e^{-2s} \quad \longrightarrow \quad V(s) = \frac{se^{-2s}}{s^2+6s+10}$$

$$V(s) = \frac{(s+3)e^{-2s} - 3e^{-2s}}{(s+3)^2+1}$$

Hence,

$$v(t) = \underline{\left[e^{-3(t-2)}\cos(t-2) - 3e^{-3(t-2)}\sin(t-2)\right]u(t-2)}$$

Chapter 15, Solution 59.

Take the Laplace transform of each term of the integrodifferential equation.

$$\left[s\,Y(s) - y(0)\right] + 4\,Y(s) + \frac{3}{s}Y(s) = \frac{6}{s+2}$$

$$(s^2 + 4s + 3)\,Y(s) = s\left(\frac{6}{s+2} - 1\right)$$

$$Y(s) = \frac{s\,(4-s)}{(s+2)(s^2+4s+3)} = \frac{(4-s)\,s}{(s+1)(s+2)(s+3)}$$

$$Y(s) = \frac{A}{s+1} + \frac{B}{s+2} + \frac{C}{s+3}$$

$A = 2.5$, $B = 6$, $C = -10.5$

$$Y(s) = \frac{2.5}{s+1} + \frac{6}{s+2} - \frac{10.5}{s+3}$$

$$y(t) = \underline{\mathbf{2.5\,e^{-t} + 6\,e^{-2t} - 10.5\,e^{-3t}}}$$

Chapter 15, Solution 60.

Take the Laplace transform of each term of the integrodifferential equation.

$$2\left[s\,X(s) - x(0)\right] + 5\,X(s) + \frac{3}{s}X(s) + \frac{4}{s} = \frac{4}{s^2+16}$$

$$(2s^2 + 5s + 3)\,X(s) = 2s - 4 + \frac{4s}{s^2+16} = \frac{2s^3 - 4s^2 + 36s - 64}{s^2+16}$$

$$X(s) = \frac{2s^3 - 4s^2 + 36s - 64}{(2s^2+5s+3)(s^2+16)} = \frac{s^3 - 2s^2 + 18s - 32}{(s+1)(s+1.5)(s^2+16)}$$

$$X(s) = \frac{A}{s+1} + \frac{B}{s+1.5} + \frac{Cs+D}{s^2+16}$$

$$A = (s+1)\,X(s)\Big|_{s=-1} = -6.235$$
$$B = (s+1.5)\,X(s)\Big|_{s=-1.5} = 7.329$$

When $s = 0$,

$$\frac{-32}{(1.5)(16)} = A + \frac{B}{1.5} + \frac{D}{16} \quad \longrightarrow \quad D = 0.2579$$

$$s^3 - 2s^2 + 18s - 32 = A\,(s^3 + 1.5s^2 + 16s + 24) + B\,(s^3 + s^2 + 16s + 16)$$
$$+ C\,(s^3 + 2.5s^2 + 1.5s) + D\,(s^2 + 2.5s + 1.5)$$

Equating coefficients of the s^3 terms,

$$1 = A + B + C \quad \longrightarrow \quad C = -0.0935$$

$$X(s) = \frac{-6.235}{s+1} + \frac{7.329}{s+1.5} + \frac{-0.0935s + 0.2579}{s^2+16}$$

$$x(t) = \underline{\mathbf{-6.235\,e^{-t} + 7.329\,e^{-1.5t} - 0.0935\cos(4t) + 0.0645\sin(4t)}}$$

Chapter 16, Solution 1.

Consider the s-domain form of the circuit which is shown below.

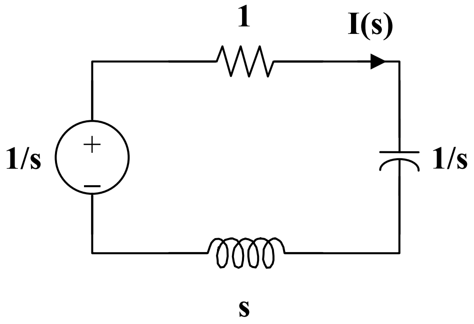

$$I(s) = \frac{1/s}{1 + s + 1/s} = \frac{1}{s^2 + s + 1} = \frac{1}{(s + 1/2)^2 + (\sqrt{3}/2)^2}$$

$$i(t) = \frac{2}{\sqrt{3}} e^{-t/2} \sin\left(\frac{\sqrt{3}}{2} t\right)$$

$$i(t) = \underline{\mathbf{1.155 e^{-0.5t} \sin(0.866t)\ A}}$$

Chapter 16, Solution 2.

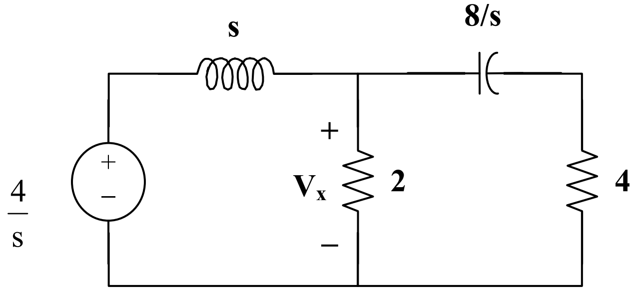

$$\frac{V_x - \frac{4}{s}}{s} + \frac{V_x - 0}{2} + \frac{V_x - 0}{4 + \frac{8}{s}} = 0$$

$$V_x(4s + 8) - \frac{(16s + 32)}{s} + (2s^2 + 4s)V_x + s^2 V_x = 0$$

$$V_x(3s^2 + 8s + 8) = \frac{16s + 32}{s}$$

$$V_x = -16\frac{s + 2}{s(3s^2 + 8s + 8)} = -16\left(\frac{0.25}{s} + \frac{-0.125}{s + \frac{4}{3} + j\frac{\sqrt{8}}{3}} + \frac{-0.125}{s + \frac{4}{3} - j\frac{\sqrt{8}}{3}}\right)$$

$$v_x = \underline{(-4 + 2e^{-(1.3333 + j0.9428)t} + 2e^{-(1.3333 - j0.9428)t})u(t)\,V}$$

$$v_x = \underline{4u(t) - e^{-4t/3}\cos\left(\frac{2\sqrt{2}}{3}t\right) - \frac{6}{\sqrt{2}}e^{-4t/3}\sin\left(\frac{2\sqrt{2}}{3}t\right)\,V}$$

Chapter 16, Solution 3.

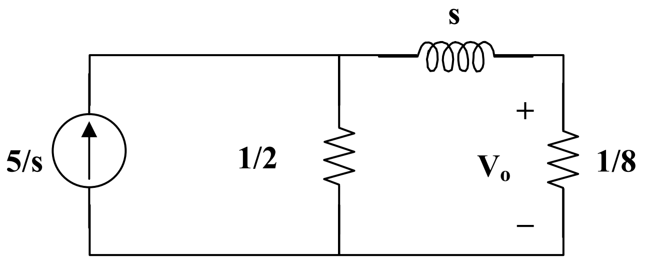

Current division leads to:

$$V_o = \frac{1}{8}\frac{5}{s}\left(\frac{\frac{1}{2}}{\frac{1}{2} + \frac{1}{8} + s}\right) = \frac{5}{10 + 16s} = \frac{5}{16(s + 0.625)}$$

$$v_o(t) = \underline{0.3125\left(1 - e^{-0.625t}\right)u(t)\ V}$$

Chapter 16, Solution 4.

The s-domain form of the circuit is shown below.

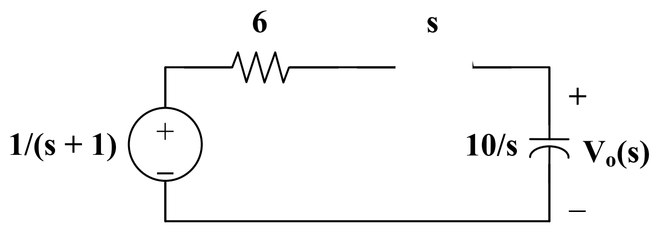

Using voltage division,

$$V_o(s) = \frac{10/s}{s + 6 + 10/s}\left(\frac{1}{s+1}\right) = \frac{10}{s^2 + 6s + 10}\left(\frac{1}{s+1}\right)$$

$$V_o(s) = \frac{10}{(s+1)(s^2 + 6s + 10)} = \frac{A}{s+1} + \frac{Bs + C}{s^2 + 6s + 10}$$

$$10 = A(s^2 + 6s + 10) + B(s^2 + s) + C(s+1)$$

Equating coefficients :

s^2: $\quad 0 = A + B \longrightarrow B = -A$

s^1: $\quad 0 = 6A + B + C = 5A + C \longrightarrow C = -5A$

s^0: $\quad 10 = 10A + C = 5A \longrightarrow A = 2, B = -2, C = -10$

$$V_o(s) = \frac{2}{s+1} - \frac{2s + 10}{s^2 + 6s + 10} = \frac{2}{s+1} - \frac{2(s+3)}{(s+3)^2 + 1^2} - \frac{4}{(s+3)^2 + 1^2}$$

$$v_o(t) = \underline{\mathbf{2e^{-t} - 2e^{-3t}\cos(t) - 4e^{-3t}\sin(t)\ V}}$$

Chapter 16, Solution 5.

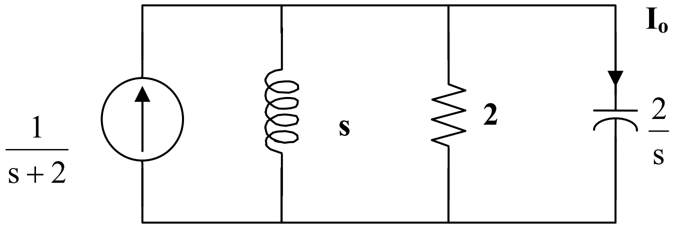

$$V = \frac{1}{s+2}\left(\frac{1}{\frac{1}{s}+\frac{1}{2}+\frac{s}{2}}\right) = \frac{1}{s+2}\left(\frac{2s}{s^2+s+2}\right) = \frac{2s}{(s+2)(s+0.5+j1.3229)(s+0.5-j1.3229)}$$

$$I_o = \frac{Vs}{2} = \frac{s^2}{(s+2)(s+0.5+j1.3229)(s+0.5-j1.3229)}$$

$$= \frac{1}{s+2} + \frac{\frac{(-0.5-j1.3229)^2}{(1.5-j1.3229)(-j2.646)}}{s+0.5+j1.3229} + \frac{\frac{(-0.5+j1.3229)^2}{(1.5+j1.3229)(+j2.646)}}{s+0.5-j1.3229}$$

$$i_o(t) = \underline{\left(e^{-2t} + 0.3779e^{-90°}e^{-t/2}e^{-j1.3229t} + 0.3779e^{90°}e^{-t/2}e^{j1.3229t}\right)u(t)\,A}$$

or

$$\underline{= \left(e^{-2t} - 0.7559\sin 1.3229t\right)u(t)\,A}$$

Chapter 16, Solution 6.

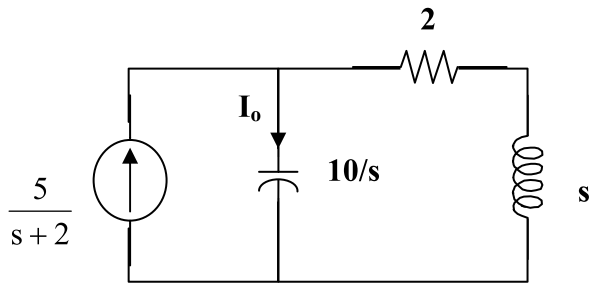

Use current division.

$$I_o = \frac{s+2}{s+2+\frac{10}{s}}\,\frac{5}{s+2} = \frac{5s}{s^2+2s+10} = \frac{5(s+1)}{(s+1)^2+3^2} - \frac{5}{(s+1)^2+3^2}$$

$$i_o(t) = \underline{5e^{-t}\cos 3t - \frac{5}{3}e^{-t}\sin 3t}$$

Chapter 16, Solution 7.

The s-domain version of the circuit is shown below.

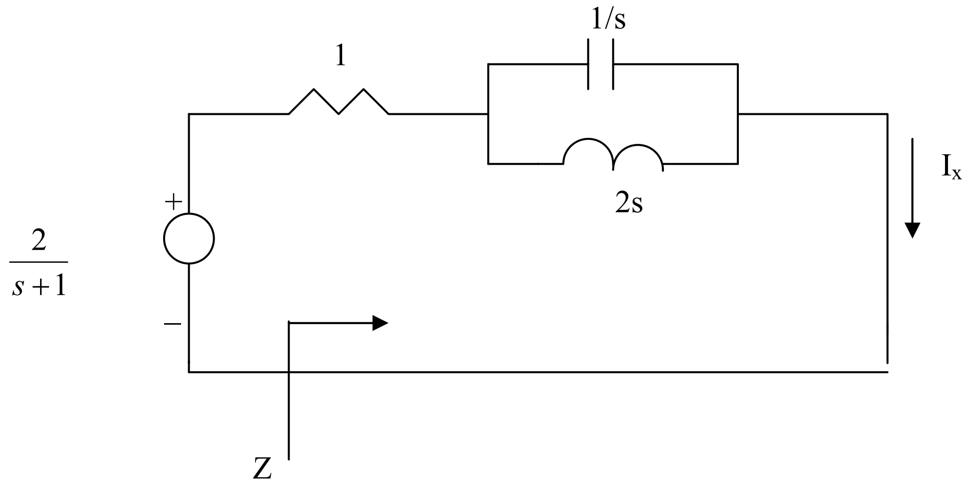

$$Z = 1 + \frac{1}{s} // 2s = 1 + \frac{\frac{1}{s}(2s)}{\frac{1}{s} + 2s} = 1 + \frac{2s}{1 + 2s^2} = \frac{2s^2 + 2s + 1}{1 + 2s^2}$$

$$I_x = \frac{V}{Z} = \frac{2}{s+1} x \frac{1 + 2s^2}{2s^2 + 2s + 1} = \frac{2s^2 + 1}{(s+1)(s^2 + s + 0.5)} = \frac{A}{(s+1)} + \frac{Bs + C}{(s^2 + s + 0.5)}$$

$$2s^2 + 1 = A(s^2 + s + 0.5) + B(s^2 + s) + C(s+1)$$

$$s^2 : \qquad 2 = A + B$$

$$s : \qquad 0 = A + B + C = 2 + C \longrightarrow C = -2$$

$$\text{constant}: \qquad 1 = 0.5A + C \text{ or } 0.5A = 3 \longrightarrow A = 6, \ B = -4$$

$$I_x = \frac{6}{s+1} - \frac{4s + 2}{(s+0.5)^2 + 0.75} = \frac{6}{s+1} - \frac{4(s+0.5)}{(s+0.5)^2 + 0.866^2}$$

$$i_x(t) = \underline{\left[6 - 4e^{-0.5t} \cos 0.866t\right] u(t) \,A}$$

Chapter 16, Solution 8.

(a) $$Z = \frac{1}{s} + 1//(1+2s) = \frac{1}{s} + \frac{(1+2s)}{2+2s} = \underline{\frac{s^2 + 1.5s + 1}{s(s+1)}}$$

(b) $$\frac{1}{Z} = \frac{1}{2} + \frac{1}{s} + \frac{1}{1+\frac{1}{s}} = \frac{3s^2 + 3s + 2}{2s(s+1)}$$

$$Z = \underline{\frac{2s(s+1)}{3s^2 + 3s + 2}}$$

Chapter 16, Solution 9.

(a) The s-domain form of the circuit is shown in Fig. (a).

$$Z_{in} = 2 \,||\, (s + 1/s) = \frac{2(s+1/s)}{2+s+1/s} = \underline{\mathbf{\frac{2(s^2+1)}{s^2+2s+1}}}$$

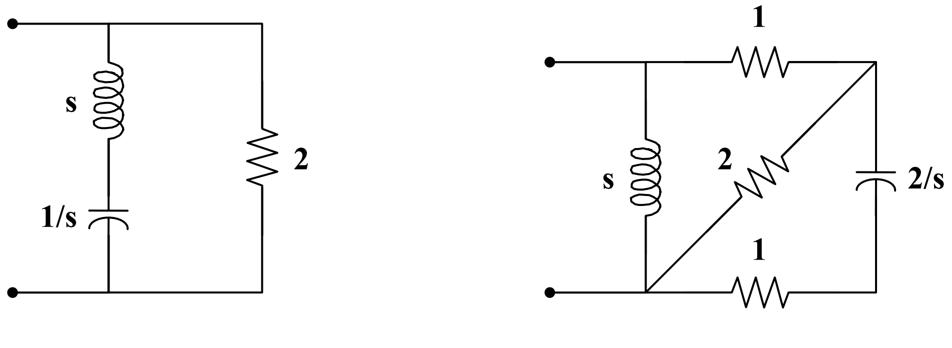

(a) **(b)**

(b) The s-domain equivalent circuit is shown in Fig. (b).

$$2 \,||\, (1 + 2/s) = \frac{2(1+2/s)}{3+2/s} = \frac{2(s+2)}{3s+2}$$

$$1 + 2 \,||\, (1+2/s) = \frac{5s+6}{3s+2}$$

$$Z_{in} = s \,||\, \left(\frac{5s+6}{3s+2}\right) = \frac{s \cdot \left(\frac{5s+6}{3s+2}\right)}{s + \left(\frac{5s+6}{3s+2}\right)} = \underline{\mathbf{\frac{s(5s+6)}{3s^2+7s+6}}}$$

Chapter 16, Solution 10.

To find Z_{Th}, consider the circuit below.

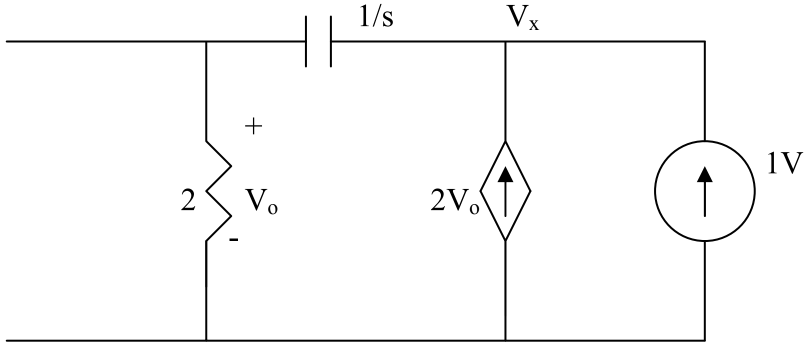

Applying KCL gives

$$1 + 2V_o = \frac{V_x}{2 + 1/s}$$

But $V_o = \dfrac{2}{2+1/s}V_x$. Hence

$$1 + \frac{4V_x}{2+1/s} = \frac{V_x}{2+1/s} \longrightarrow V_x = -\frac{(2s+1)}{3s}$$

$$Z_{Th} = \frac{V_x}{1} = -\frac{(2s+1)}{3s}$$

To find V_{Th}, consider the circuit below.

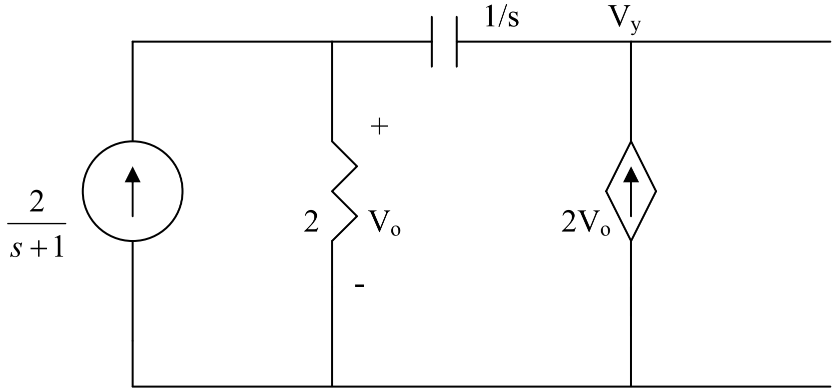

Applying KCL gives

$$\frac{2}{s+1} + 2V_o = \frac{V_o}{2} \longrightarrow V_o = -\frac{4}{3(s+1)}$$

But $-V_y + 2V_o \bullet \frac{1}{s} + V_o = 0$

$$V_{Th} = V_y = V_o(1+\frac{2}{s}) = -\frac{4}{3(s+1)}\left(\frac{s+2}{s}\right) = \underline{\frac{-4(s+2)}{3s(s+1)}}$$

Chapter 16, Solution 11.

The s-domain form of the circuit is shown below.

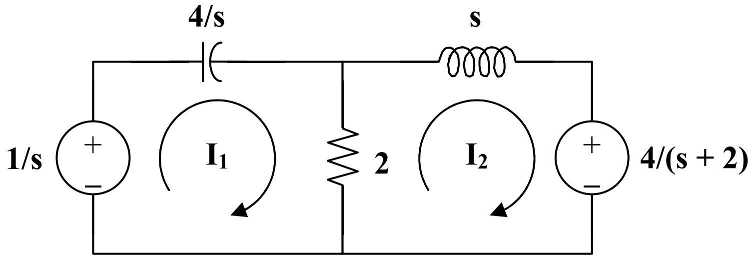

Write the mesh equations.

$$\frac{1}{s} = \left(2+\frac{4}{s}\right)I_1 - 2I_2 \qquad (1)$$

$$\frac{-4}{s+2} = -2I_1 + (s+2)\,I_2 \qquad (2)$$

Put equations (1) and (2) into matrix form.

$$\begin{bmatrix} 1/s \\ -4/(s+2) \end{bmatrix} = \begin{bmatrix} 2+4/s & -2 \\ -2 & s+2 \end{bmatrix}\begin{bmatrix} I_1 \\ I_2 \end{bmatrix}$$

$$\Delta = \frac{2}{s}(s^2+2s+4), \quad \Delta_1 = \frac{s^2-4s+4}{s(s+2)}, \quad \Delta_2 = \frac{-6}{s}$$

$$I_1 = \frac{\Delta_1}{\Delta} = \frac{1/2\cdot(s^2-4s+4)}{(s+2)(s^2+2s+4)} = \frac{A}{s+2} + \frac{Bs+C}{s^2+2s+4}$$

$$1/2\cdot(s^2-4s+4) = A(s^2+2s+4) + B(s^2+2s) + C(s+2)$$

Equating coefficients :

s^2: $\quad 1/2 = A + B$

s^1: $\quad -2 = 2A + 2B + C$

$s^0: \quad 2 = 4A + 2C$

Solving these equations leads to $\quad A = 2, \quad B = -3/2, \quad C = -3$

$$I_1 = \frac{2}{s+2} + \frac{-3/2\,s - 3}{(s+1)^2 + (\sqrt{3})^2}$$

$$I_1 = \frac{2}{s+2} + \frac{-3}{2}\cdot\frac{(s+1)}{(s+1)^2 + (\sqrt{3})^2} + \frac{-3}{2\sqrt{3}}\cdot\frac{\sqrt{3}}{(s+1)^2 + (\sqrt{3})^2}$$

$$i_1(t) = \underline{\left[\mathbf{2\,e^{-2t} - 1.5\,e^{-t}\cos(1.732t) - 0.866\sin(1.732t)}\right]\mathbf{u(t)\ A}}$$

$$I_2 = \frac{\Delta_2}{\Delta} = \frac{-6}{s}\cdot\frac{s}{2(s^2 + 2s + 4)} = \frac{-3}{(s+1)^2 + (\sqrt{3})^2}$$

$$i_2(t) = \frac{-3}{\sqrt{3}}e^{-t}\sin(\sqrt{3}t) = \underline{\mathbf{-1.732\,e^{-t}\sin(1.732t)\,u(t)\ A}}$$

Chapter 16, Solution 12.

We apply nodal analysis to the s-domain form of the circuit below.

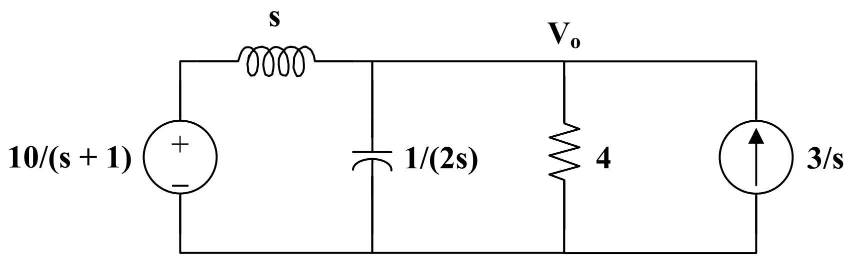

$$\frac{\frac{10}{s+1} - V_o}{s} + \frac{3}{s} = \frac{V_o}{4} + 2sV_o$$

$$(1 + 0.25s + s^2)V_o = \frac{10}{s+1} + 15 = \frac{10 + 15s + 15}{s+1}$$

$$V_o = \frac{15s + 25}{(s+1)(s^2 + 0.25s + 1)} = \frac{A}{s+1} + \frac{Bs + C}{s^2 + 0.25s + 1}$$

$$A = (s+1)V_o\Big|_{s=-1} = \frac{40}{7}$$

$$15s + 25 = A(s^2 + 0.25s + 1) + B(s^2 + s) + C(s+1)$$

Equating coefficients :

s^2: $\quad 0 = A + B \longrightarrow B = -A$

s^1: $\quad 15 = 0.25A + B + C = -0.75A + C$

s^0: $\quad 25 = A + C$

$A = 40/7, \qquad B = -40/7, \qquad C = 135/7$

$$V_o = \frac{\frac{40}{7}}{s+1} + \frac{\frac{-40}{7}s + \frac{135}{7}}{\left(s+\frac{1}{2}\right)^2 + \frac{3}{4}} = \frac{40}{7}\frac{1}{s+1} - \frac{40}{7}\frac{s+\frac{1}{2}}{\left(s+\frac{1}{2}\right)^2 + \frac{3}{4}} + \left(\frac{155}{7}\cdot\frac{2}{\sqrt{3}}\right)\frac{\frac{\sqrt{3}}{2}}{\left(s+\frac{1}{2}\right)^2 + \frac{3}{4}}$$

$$v_o(t) = \frac{40}{7}e^{-t} - \frac{40}{7}e^{-t/2}\cos\left(\frac{\sqrt{3}}{2}t\right) + \frac{(155)(2)}{(7)(\sqrt{3})}e^{-t/2}\sin\left(\frac{\sqrt{3}}{2}t\right)$$

$$v_o(t) = \underline{\mathbf{5.714\,e^{-t} - 5.714\,e^{-t/2}\cos(0.866t) + 25.57\,e^{-t/2}\sin(0.866t)\ V}}$$

Chapter 16, Solution 13.

Consider the following circuit.

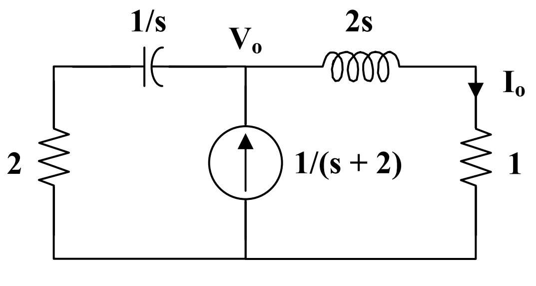

Applying KCL at node o,

$$\frac{1}{s+2} = \frac{V_o}{2s+1} + \frac{V_o}{2+1/s} = \frac{s+1}{2s+1}V_o$$

$$V_o = \frac{2s+1}{(s+1)(s+2)}$$

$$I_o = \frac{V_o}{2s+1} = \frac{1}{(s+1)(s+2)} = \frac{A}{s+1} + \frac{B}{s+2}$$

$A = 1, \qquad B = -1$

$$I_o = \frac{1}{s+1} - \frac{1}{s+2}$$

$$i_o(t) = \underline{\left(\mathbf{e^{-t} - e^{-2t}}\right)\mathbf{u(t)\ A}}$$

Chapter 16, Solution 14.

We first find the initial conditions from the circuit in Fig. (a).

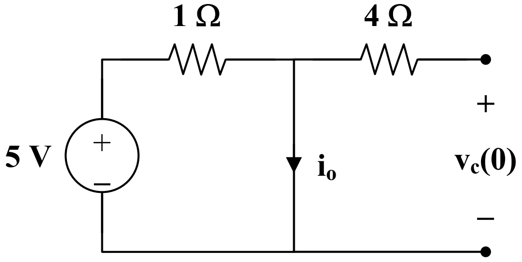

(a)

$i_o(0^-) = 5\ \text{A}, \quad v_c(0^-) = 0\ \text{V}$

We now incorporate these conditions in the s-domain circuit as shown in Fig.(b).

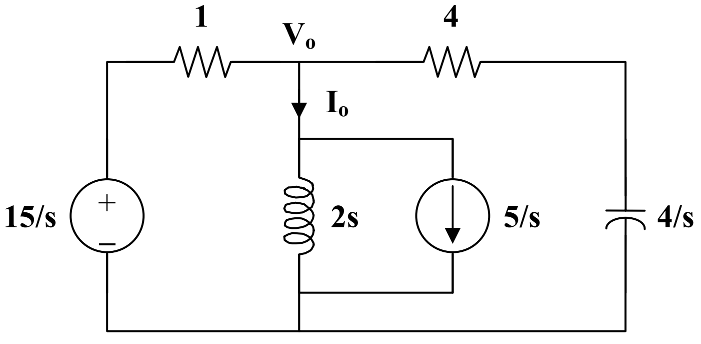

(b)

At node o,

$$\frac{V_o - 15/s}{1} + \frac{V_o}{2s} + \frac{5}{s} + \frac{V_o - 0}{4 + 4/s} = 0$$

$$\frac{15}{s} - \frac{5}{s} = \left(1 + \frac{1}{2s} + \frac{s}{4(s+1)}\right)V_o$$

$$\frac{10}{s} = \frac{4s^2 + 4s + 2s + 2 + s^2}{4s(s+1)}V_o = \frac{5s^2 + 6s + 2}{4s(s+1)}V_o$$

$$V_o = \frac{40(s+1)}{5s^2 + 6s + 2}$$

$$I_o = \frac{V_o}{2s} + \frac{5}{s} = \frac{4(s+1)}{s(s^2 + 1.2s + 0.4)} + \frac{5}{s}$$

$$I_o = \frac{5}{s} + \frac{A}{s} + \frac{Bs + C}{s^2 + 1.2s + 0.4}$$

$$4(s+1) = A(s^2 + 1.2s + 0.4) + Bs^s + Cs$$

Equating coefficients :

s^0: $\quad 4 = 0.4A \longrightarrow A = 10$

s^1: $\quad 4 = 1.2A + C \longrightarrow C = -1.2A + 4 = -8$

s^2: $\quad 0 = A + B \longrightarrow B = -A = -10$

$$I_o = \frac{5}{s} + \frac{10}{s} - \frac{10s + 8}{s^2 + 1.2s + 0.4}$$

$$I_o = \frac{15}{s} - \frac{10(s+0.6)}{(s+0.6)^2 + 0.2^2} - \frac{10(0.2)}{(s+0.6)^2 + 0.2^2}$$

$$i_o(t) = \underline{\left[\mathbf{15 - 10e^{-0.6t}\left(\cos(0.2t) - \sin(0.2t)\right)}\right]\ \mathbf{u(t)\ A}}$$

Chapter 16, Solution 15.

First we need to transform the circuit into the s-domain.

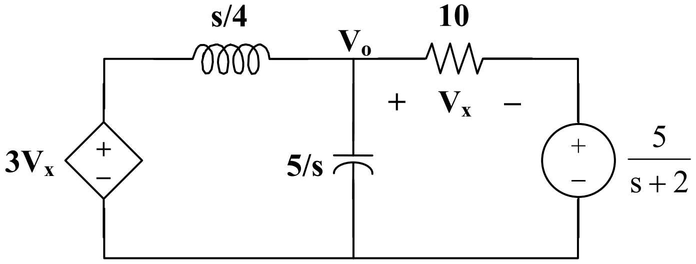

$$\frac{V_o - 3V_x}{s/4} + \frac{V_o - 0}{5/s} + \frac{V_o - \frac{5}{s+2}}{10} = 0$$

$$40V_o - 120V_x + 2s^2V_o + sV_o - \frac{5s}{s+2} = 0 = (2s^2 + s + 40)V_o - 120V_x - \frac{5s}{s+2}$$

But, $V_x = V_o - \frac{5}{s+2} \rightarrow V_o = V_x + \frac{5}{s+2}$

We can now solve for V_x.

$$(2s^2 + s + 40)\left(V_x + \frac{5}{s+2}\right) - 120V_x - \frac{5s}{s+2} = 0$$

$$2(s^2 + 0.5s - 40)V_x = -10\frac{(s^2 + 20)}{s+2}$$

$$V_x = -5\frac{(s^2 + 20)}{(s+2)(s^2 + 0.5s - 40)}$$

Chapter 16, Solution 16.

We first need to find the initial conditions. For $t < 0$, the circuit is shown in Fig. (a). To dc, the capacitor acts like an open circuit and the inductor acts like a short circuit.

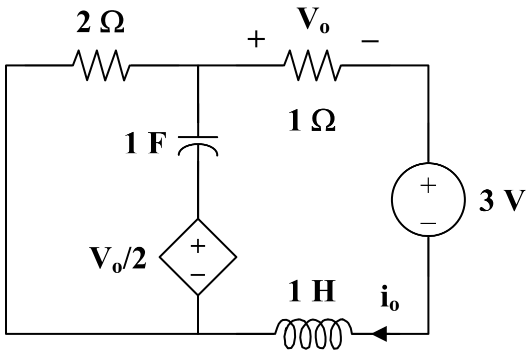

(a)

Hence,

$$i_L(0) = i_o = \frac{-3}{3} = -1\text{ A}, \qquad v_o = -1\text{ V}$$

$$v_c(0) = -(2)(-1) - \left(\frac{-1}{2}\right) = 2.5\text{ V}$$

We now incorporate the initial conditions for $t > 0$ as shown in Fig. (b).

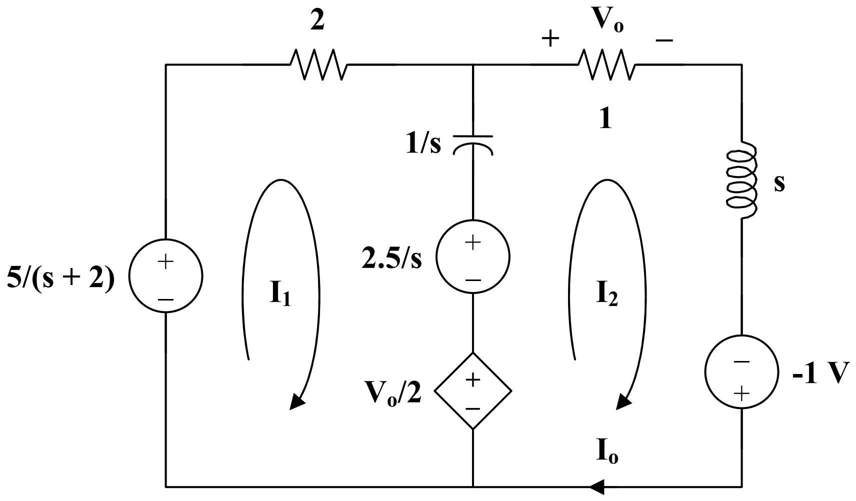

(b)

For mesh 1,

$$\frac{-5}{s+2} + \left(2 + \frac{1}{s}\right)I_1 - \frac{1}{s}I_2 + \frac{2.5}{s} + \frac{V_o}{2} = 0$$

But, $V_o = I_o = I_2$

$$\left(2 + \frac{1}{s}\right)I_1 + \left(\frac{1}{2} - \frac{1}{s}\right)I_2 = \frac{5}{s+2} - \frac{2.5}{s} \qquad (1)$$

For mesh 2,

$$\left(1 + s + \frac{1}{s}\right)I_2 - \frac{1}{s}I_1 + 1 - \frac{V_o}{2} - \frac{2.5}{s} = 0$$

$$-\frac{1}{s}I_1 + \left(\frac{1}{2} + s + \frac{1}{s}\right)I_2 = \frac{2.5}{s} - 1 \qquad (2)$$

Put (1) and (2) in matrix form.

$$\begin{bmatrix} 2+\frac{1}{s} & \frac{1}{2}-\frac{1}{s} \\ \frac{-1}{s} & \frac{1}{2}+s+\frac{1}{s} \end{bmatrix} \begin{bmatrix} I_1 \\ I_2 \end{bmatrix} = \begin{bmatrix} \frac{5}{s+2}-\frac{2.5}{s} \\ \frac{2.5}{s}-1 \end{bmatrix}$$

$$\Delta = 2s + 2 + \frac{3}{s}, \qquad \Delta_2 = -2 + \frac{4}{s} + \frac{5}{s(s+2)}$$

$$I_o = I_2 = \frac{\Delta_2}{\Delta} = \frac{-2s^2 + 13}{(s+2)(2s^2+2s+3)} = \frac{A}{s+2} + \frac{Bs + C}{2s^2 + 2s + 3}$$

$$-2s^2 + 13 = A(2s^2 + 2s + 3) + B(s^2 + 2s) + C(s+2)$$

Equating coefficients :

s^2: $-2 = 2A + B$

s^1: $0 = 2A + 2B + C$

s^0: $13 = 3A + 2C$

Solving these equations leads to

$A = 0.7143, \quad B = -3.429, \quad C = 5.429$

$$I_o = \frac{0.7143}{s+2} - \frac{3.429s - 5.429}{2s^2 + 2s + 3} = \frac{0.7143}{s+2} - \frac{1.7145s - 2.714}{s^2 + s + 1.5}$$

$$I_o = \frac{0.7143}{s+2} - \frac{1.7145(s+0.5)}{(s+0.5)^2 + 1.25} + \frac{(3.194)(\sqrt{1.25})}{(s+0.5)^2 + 1.25}$$

$$i_o(t) = \underline{\mathbf{\left[0.7143\, e^{-2t} - 1.7145\, e^{-0.5t} \cos(1.25t) + 3.194\, e^{-0.5t} \sin(1.25t)\right] u(t)\ A}}$$

Chapter 16, Solution 17.

We apply mesh analysis to the s-domain form of the circuit as shown below.

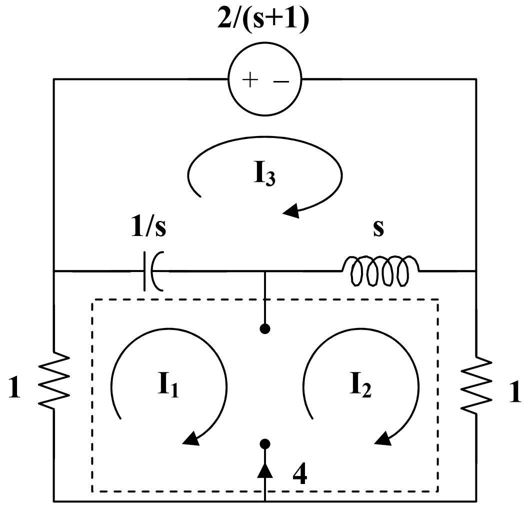

For mesh 3,

$$\frac{2}{s+1} + \left(s + \frac{1}{s}\right) I_3 - \frac{1}{s} I_1 - s I_2 = 0 \qquad (1)$$

For the supermesh,

$$\left(1 + \frac{1}{s}\right) I_1 + (1+s) I_2 - \left(\frac{1}{s} + s\right) I_3 = 0 \qquad (2)$$

But $\quad I_1 = I_2 - 4 \qquad (3)$

Substituting (3) into (1) and (2) leads to

$$\left(2 + s + \frac{1}{s}\right) I_2 - \left(s + \frac{1}{s}\right) I_3 = 4\left(1 + \frac{1}{s}\right) \qquad (4)$$

$$-\left(s + \frac{1}{s}\right) I_2 + \left(s + \frac{1}{s}\right) I_3 = \frac{-4}{s} - \frac{2}{s+1} \qquad (5)$$

Adding (4) and (5) gives

$$2 I_2 = 4 - \frac{2}{s+1}$$

$$I_2 = 2 - \frac{1}{s+1}$$

$$i_o(t) = i_2(t) = \underline{\mathbf{(2 - e^{-t})u(t)\ A}}$$

Chapter 16, Solution 18.

$v_s(t) = 3u(t) – 3u(t–1)$ or $V_s = \dfrac{3}{s} - \dfrac{e^{-s}}{s} = \dfrac{3}{s}(1 - e^{-s})$

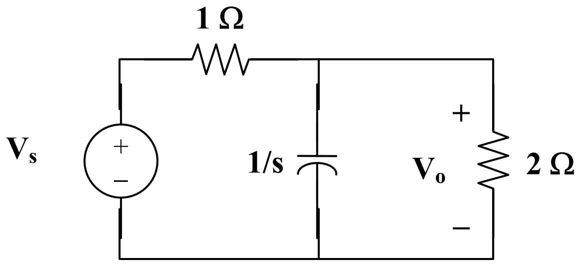

$$\frac{V_o - V_s}{1} + sV_o + \frac{V_o}{2} = 0 \to (s + 1.5)V_o = V_s$$

$$V_o = \frac{3}{s(s+1.5)}(1 - e^{-s}) = \left(\frac{2}{s} - \frac{2}{s+1.5}\right)(1 - e^{-s})$$

$$v_o(t) = \underline{[(2 - 2e^{-1.5t})u(t) - (2 - 2e^{-1.5(t-1)})u(t-1)]\,V}$$

Chapter 16, Solution 19.

We incorporate the initial conditions in the s-domain circuit as shown below.

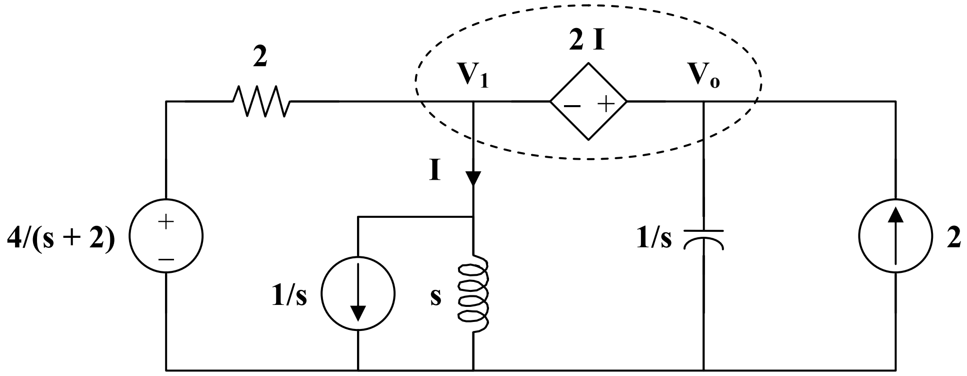

At the supernode,

$$\frac{4/(s+2)-V_1}{2}+2=\frac{V_1}{s}+\frac{1}{s}+sV_o$$

$$\frac{2}{s+2}+2=\left(\frac{1}{2}+\frac{1}{s}\right)V_1+\frac{1}{s}+s\,V_o \qquad (1)$$

But $\quad V_o = V_1 + 2I \quad$ and $\quad I=\dfrac{V_1+1}{s}$

$$V_o = V_1 + \frac{2(V_1+1)}{s} \longrightarrow V_1=\frac{V_o-2/s}{(s+2)/s}=\frac{s\,V_o-2}{s+2} \qquad (2)$$

Substituting (2) into (1)

$$\frac{2}{s+2}+2-\frac{1}{s}=\left(\frac{2s+1}{s}\right)\left[\left(\frac{s}{s+2}\right)V_o-\frac{2}{s+2}\right]+s\,V_o$$

$$\frac{2}{s+2}+2-\frac{1}{s}+\frac{2(2s+1)}{s(s+2)}=\left[\left(\frac{2s+1}{s+2}\right)+s\right]V_o$$

$$\frac{2s^2+9s}{s(s+2)}=\frac{2s+9}{s+2}=\frac{s^2+4s+1}{s+2}V_o$$

$$V_o=\frac{2s+9}{s^2+4s+1}=\frac{A}{s+0.2679}+\frac{B}{s+3.732}$$

$A = 2.443, \qquad B = -0.4434$

$$V_o=\frac{2.443}{s+0.2679}-\frac{0.4434}{s+3.732}$$

Therefore,

$v_o(t) =$ $\underline{\mathbf{(2.443\,e^{-0.2679t} - 0.4434\,e^{-3.732t})\,u(t)\ V}}$

Chapter 16, Solution 20.

We incorporate the initial conditions and transform the current source to a voltage source as shown.

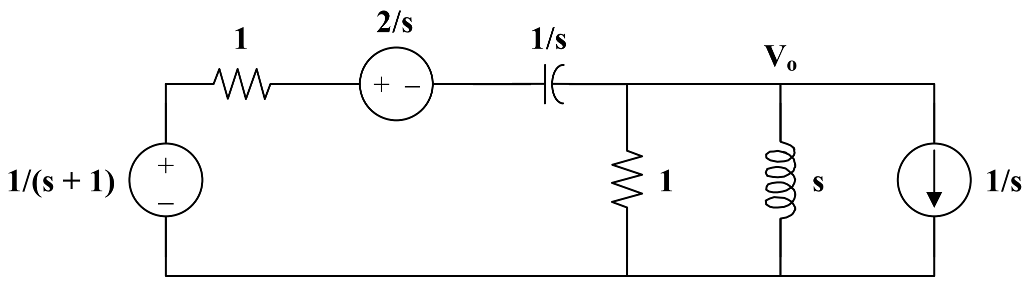

At the main non-reference node, KCL gives

$$\frac{1/(s+1) - 2/s - V_o}{1 + 1/s} = \frac{V_o}{1} + \frac{V_o}{s} + \frac{1}{s}$$

$$\frac{s}{s+1} - 2 - s\,V_o = (s+1)(s+1/s)\,V_o + \frac{s+1}{s}$$

$$\frac{s}{s+1} - \frac{s+1}{s} - 2 = (2s + 2 + 1/s)\,V_o$$

$$V_o = \frac{-2s^2 - 4s - 1}{(s+1)(2s^2 + 2s + 1)}$$

$$V_o = \frac{-s - 2s - 0.5}{(s+1)(s^2 + s + 0.5)} = \frac{A}{s+1} + \frac{Bs + C}{s^2 + s + 0.5}$$

$$A = (s+1)\,V_o\big|_{s=-1} = 1$$

$$-s^2 - 2s - 0.5 = A(s^2 + s + 0.5) + B(s^2 + s) + C(s+1)$$

Equating coefficients :

$$s^2: \quad -1 = A + B \longrightarrow B = -2$$

$$s^1: \quad -2 = A + B + C \longrightarrow C = -1$$

$$s^0: \quad -0.5 = 0.5A + C = 0.5 - 1 = -0.5$$

$$V_o = \frac{1}{s+1} - \frac{2s+1}{s^2 + s + 0.5} = \frac{1}{s+1} - \frac{2(s+0.5)}{(s+0.5)^2 + (0.5)^2}$$

$$v_o(t) = \underline{\left[e^{-t} - 2e^{-t/2}\cos(t/2)\right]u(t)\ \text{V}}$$

Chapter 16, Solution 21.

The s-domain version of the circuit is shown below.

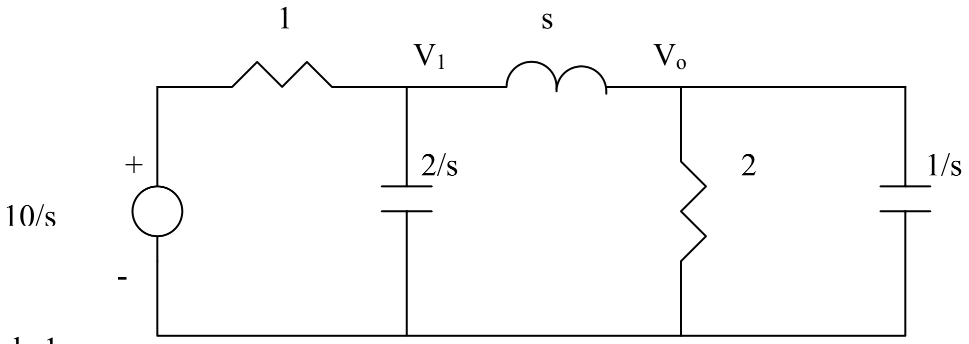

At node 1,

$$\frac{\frac{10}{s} - V_1}{1} = \frac{V_1 - V_o}{s} + \frac{s}{2}V_o \quad \longrightarrow \quad 10 = (s+1)V_1 + (\frac{s^2}{2} - 1)V_o \qquad (1)$$

At node 2,

$$\frac{V_1 - V_o}{s} = \frac{V_o}{2} + sV_o \quad \longrightarrow \quad V_1 = V_o(\frac{s}{2} + s^2 + 1) \qquad (2)$$

Substituting (2) into (1) gives

$$10 = (s+1)(s^2 + s/2 + 1)V_o + (\frac{s^2}{2} - 1)V_o = s(s^2 + 2s + 1.5)V_o$$

$$V_o = \frac{10}{s(s^2 + 2s + 1.5)} = \frac{A}{s} + \frac{Bs + C}{s^2 + 2s + 1.5}$$

$$10 = A(s^2 + 2s + 1.5) + Bs^2 + Cs$$

$s^2 :\quad 0 = A + B$

$s :\quad 0 = 2A + C$

constant: $\quad 10 = 1.5A \quad \longrightarrow \quad A = 20/3,\ B = -20/3,\ C = -40/3$

$$V_o = \frac{20}{3}\left[\frac{1}{s} - \frac{s+2}{s^2 + 2s + 1.5}\right] = \frac{20}{3}\left[\frac{1}{s} - \frac{s+1}{(s+1)^2 + 0.7071^2} - 1.414\frac{0.7071}{(s+1)^2 + 0.7071^2}\right]$$

Taking the inverse Laplace tranform finally yields

$$\underline{v_o(t) = \frac{20}{3}\left[1 - e^{-t}\cos 0.7071t - 1.414e^{-t}\sin 0.7071t\right]u(t)\text{ V}}$$

Chapter 16, Solution 22.

The s-domain version of the circuit is shown below.

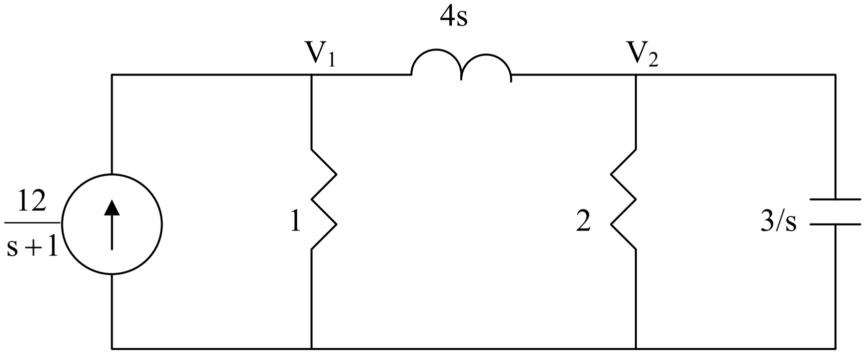

At node 1,

$$\frac{12}{s+1} = \frac{V_1}{1} + \frac{V_1 - V_2}{4s} \longrightarrow \frac{12}{s+1} = V_1\left(1+\frac{1}{4s}\right) - \frac{V_2}{4s} \quad (1)$$

At node 2,

$$\frac{V_1 - V_2}{4s} = \frac{V_2}{2} + \frac{s}{3}V_2 \longrightarrow V_1 = V_2\left(\frac{4}{3}s^2 + 2s + 1\right) \quad (2)$$

Substituting (2) into (1),

$$\frac{12}{s+1} = V_2\left[\left(\frac{4}{3}s^2 + 2s + 1\right)\left(1+\frac{1}{4s}\right) - \frac{1}{4s}\right] = \left(\frac{4}{3}s^2 + \frac{7}{3}s + \frac{3}{2}\right)V_2$$

$$V_2 = \frac{9}{(s+1)(s^2 + \frac{7}{4}s + \frac{9}{8})} = \frac{A}{(s+1)} + \frac{Bs + C}{(s^2 + \frac{7}{4}s + \frac{9}{8})}$$

$$9 = A(s^2 + \frac{7}{4}s + \frac{9}{8}) + B(s^2 + s) + C(s+1)$$

Equating coefficients:

$$s^2: \qquad 0 = A + B$$

$$s: \qquad 0 = \frac{7}{4}A + B + C = \frac{3}{4}A + C \longrightarrow C = -\frac{3}{4}A$$

$$\text{constant}: \qquad 9 = \frac{9}{8}A + C = \frac{3}{8}A \longrightarrow A = 24,\ B = -24,\ C = -18$$

$$V_2 = \frac{24}{(s+1)} - \frac{24s+18}{(s^2+\frac{7}{4}s+\frac{9}{8})} = \frac{24}{(s+1)} - \frac{24(s+7/8)}{(s+\frac{7}{8})^2+\frac{23}{64}} + \frac{3}{(s+\frac{7}{8})^2+\frac{23}{64}}$$

Taking the inverse of this produces:

$$\underline{v_2(t) = \left[24e^{-t} - 24e^{-0.875t}\cos(0.5995t) + 5.004e^{-0.875t}\sin(0.5995t)\right]u(t)}$$

Similarly,

$$V_1 = \frac{9\left(\frac{4}{3}s^2+2s+1\right)}{(s+1)(s^2+\frac{7}{4}s+\frac{9}{8})} = \frac{D}{(s+1)} + \frac{Es+F}{(s^2+\frac{7}{4}s+\frac{9}{8})}$$

$$9\left(\frac{4}{3}s^2+2s+1\right) = D(s^2+\frac{7}{4}s+\frac{9}{8}) + E(s^2+s) + F(s+1)$$

Equating coefficients:

$s^2:\qquad 12 = D + E$

$s:\qquad 18 = \frac{7}{4}D + E + F \text{ or } 6 = \frac{3}{4}D + F \longrightarrow F = 6 - \frac{3}{4}D$

$\text{constant}:\qquad 9 = \frac{9}{8}D + F \text{ or } 3 = \frac{3}{8}D \longrightarrow D = 8,\ E = 4,\ F = 0$

$$V_1 = \frac{8}{(s+1)} + \frac{4s}{(s^2+\frac{7}{4}s+\frac{9}{8})} = \frac{8}{(s+1)} + \frac{4(s+7/8)}{(s+\frac{7}{8})^2+\frac{23}{64}} - \frac{7/2}{(s+\frac{7}{8})^2+\frac{23}{64}}$$

Thus,

$$\underline{v_1(t) = \left[8e^{-t} + 4e^{-0.875t}\cos(0.5995t) - 5.838e^{-0.875t}\sin(0.5995t)\right]u(t)}$$

Chapter 16, Solution 23.

The s-domain form of the circuit with the initial conditions is shown below.

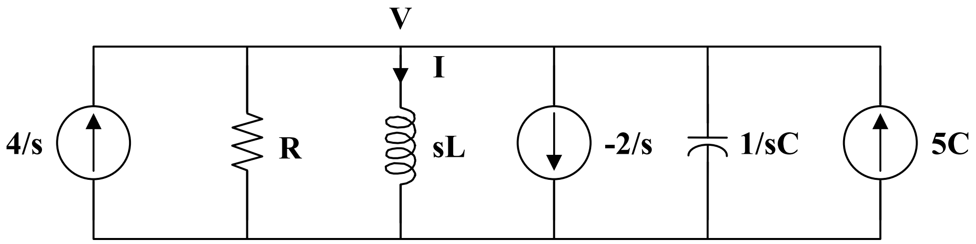

At the non-reference node,

$$\frac{4}{s}+\frac{2}{s}+5C=\frac{V}{R}+\frac{V}{sL}+sCV$$

$$\frac{6+5sC}{s}=\frac{CV}{s}\left(s^2+\frac{s}{RC}+\frac{1}{LC}\right)$$

$$V=\frac{5s+6/C}{s^2+s/RC+1/LC}$$

But $\frac{1}{RC}=\frac{1}{10/80}=8$, $\frac{1}{LC}=\frac{1}{4/80}=20$

$$V=\frac{5s+480}{s^2+8s+20}=\frac{5(s+4)}{(s+4)^2+2^2}+\frac{(230)(2)}{(s+4)^2+2^2}$$

$$v(t)=\underline{\mathbf{5e^{-4t}\cos(2t)+230e^{-4t}\sin(2t)\ V}}$$

$$I=\frac{V}{sL}=\frac{5s+480}{4s(s^2+8s+20)}$$

$$I=\frac{1.25s+120}{s(s^2+8s+20)}=\frac{A}{s}+\frac{Bs+C}{s^2+8s+20}$$

$A=6$, $B=-6$, $C=-46.75$

$$I=\frac{6}{s}-\frac{6s+46.75}{s^2+8s+20}=\frac{6}{s}-\frac{6(s+4)}{(s+4)^2+2^2}-\frac{(11.375)(2)}{(s+4)^2+2^2}$$

$$i(t)=\underline{\mathbf{6u(t)-6e^{-4t}\cos(2t)-11.375e^{-4t}\sin(2t),\quad t>0}}$$

Chapter 16, Solution 24.

At $t = 0^-$, the circuit is equivalent to that shown below.

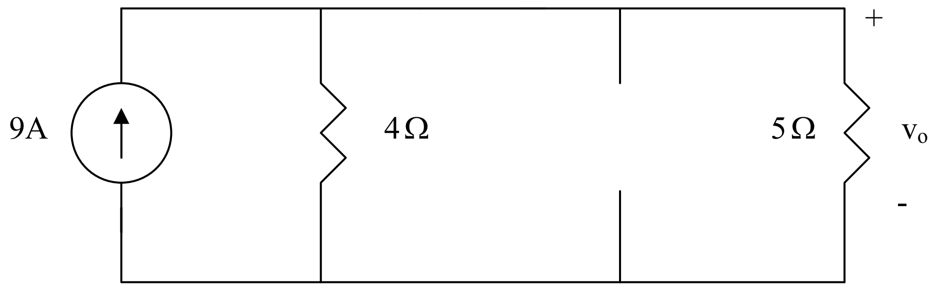

$$v_o(0) = 5x\frac{4}{4+5}(9) = 20$$

For $t > 0$, we have the Laplace transform of the circuit as shown below after transforming the current source to a voltage source.

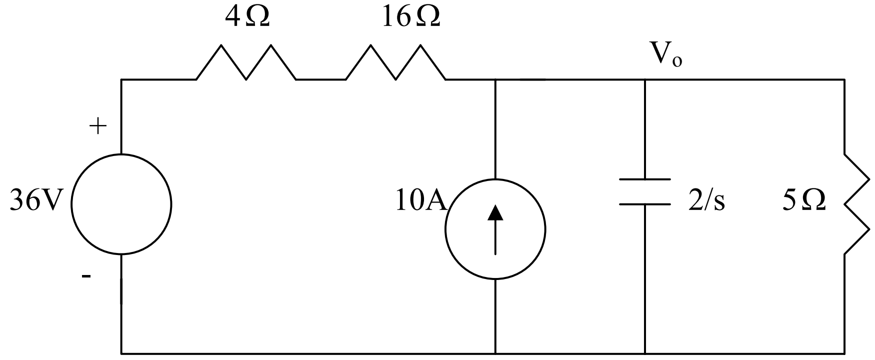

Applying KCL gives

$$\frac{36 - V_o}{20} + 10 = \frac{sV_o}{2} + \frac{V_o}{5} \quad \longrightarrow \quad V_o = \frac{3.6 + 20s}{s(s+0.5)} = \frac{A}{s} + \frac{B}{s+0.5}, \qquad A = 7.2, B = -12.8$$

Thus,

$$v_o(t) = \underline{\left[7.2 - 12.8e^{-0.5t}\right]u(t)}$$

Chapter 16, Solution 25.

For $t > 0$, the circuit in the s-domain is shown below.

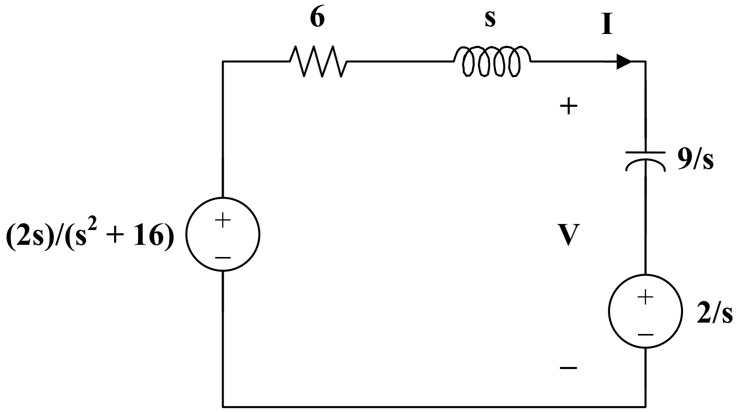

Applying KVL,

$$\frac{-2s}{s^2+16} + \left(6 + s + \frac{9}{s}\right)I + \frac{2}{s} = 0$$

$$I = \frac{4s^2+32}{(s^2+6s+9)(s^2+16)}$$

$$V = \frac{9}{s}I + \frac{2}{s} = \frac{2}{s} + \frac{36s^2+288}{s(s+3)^2(s^2+16)}$$

$$= \frac{2}{s} + \frac{A}{s} + \frac{B}{s+3} + \frac{C}{(s+3)^2} + \frac{Ds+E}{s^2+16}$$

$$36s^2 + 288 = A(s^4 + 6s^3 + 25s^2 + 96s + 144) + B(s^4 + 3s^3 + 16s^2 + 48s)$$
$$+ C(s^3 + 16s) + D(s^4 + 6s^3 + 9s^2) + E(s^3 + 6s^2 + 9s)$$

Equating coefficients :

s^0: $\quad 288 = 144A \qquad (1)$

s^1: $\quad 0 = 96A + 48B + 16C + 9E \qquad (2)$

s^2: $\quad 36 = 25A + 16B + 9D + 6E \qquad (3)$

s^3: $\quad 0 = 6A + 3B + C + 6D + E \qquad (4)$

s^4: $\quad 0 = A + B + D \qquad (5)$

Solving equations (1), (2), (3), (4) and (5) gives

$A = 2$, $\quad B = -1.7984$, $\quad C = -8.16$, $\quad D = -0.2016$, $\quad E = 2.765$

$$V(s) = \frac{4}{s} - \frac{1.7984}{s+3} - \frac{8.16}{(s+3)^2} - \frac{0.2016s}{s^2+16} + \frac{(0.6912)(4)}{s^2+16}$$

$$v(t) = \underline{\mathbf{4u(t) - 1.7984e^{-3t} - 8.16te^{-3t} - 0.2016\cos(4t) + 0.6912\sin(4t)\ V}}$$

Chapter 16, Solution 26.

Consider the op-amp circuit below.

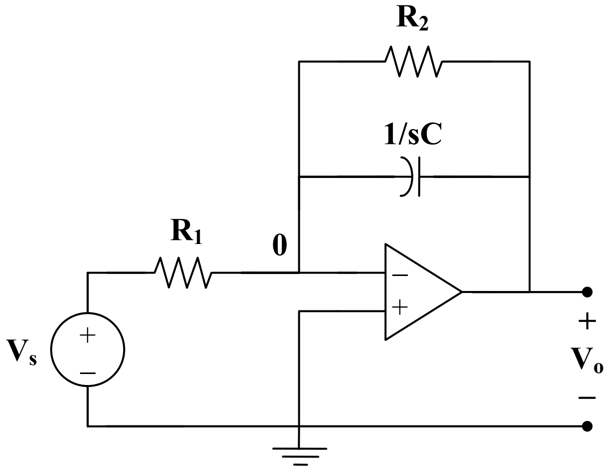

At node 0,

$$\frac{V_s - 0}{R_1} = \frac{0 - V_o}{R_2} + (0 - V_o)sC$$

$$V_s = R_1\left(\frac{1}{R_2} + sC\right)(-V_o)$$

$$\frac{V_o}{V_s} = \frac{-1}{sR_1C + R_1/R_2}$$

But $\frac{R_1}{R_2} = \frac{20}{10} = 2$, $\qquad R_1C = (20\times10^3)(50\times10^{-6}) = 1$

So, $\frac{V_o}{V_s} = \frac{-1}{s+2}$

$$V_s = 3e^{-5t} \longrightarrow V_s = 3/(s+5)$$

$$V_o = \frac{-3}{(s+2)(s+5)}$$

$$-V_o = \frac{3}{(s+2)(s+5)} = \frac{A}{s+2} + \frac{B}{s+5}$$

$$A = 1, \qquad B = -1$$

$$V_o = \frac{1}{s+5} - \frac{1}{s+2}$$

$$v_o(t) = \underline{\left(\mathbf{e^{-5t} - e^{-2t}}\right)\mathbf{u(t)}}$$

Chapter 16, Solution 27.

Consider the following circuit.

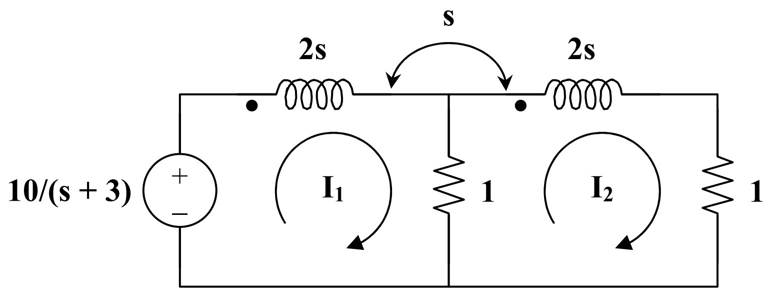

For mesh 1,

$$\frac{10}{s+3} = (1+2s)\,I_1 - I_2 - s\,I_2$$

$$\frac{10}{s+3} = (1+2s)\,I_1 - (1+s)\,I_2 \qquad (1)$$

For mesh 2,

$$0 = (2+2s)\,I_2 - I_1 - s\,I_1$$
$$0 = -(1+s)\,I_1 + 2\,(s+1)\,I_2 \qquad (2)$$

(1) and (2) in matrix form,

$$\begin{bmatrix} 10/(s+3) \\ 0 \end{bmatrix} = \begin{bmatrix} 2s+1 & -(s+1) \\ -(s+1) & 2\,(s+1) \end{bmatrix} \begin{bmatrix} I_1 \\ I_2 \end{bmatrix}$$

$$\Delta = 3s^2 + 4s + 1$$

$$\Delta_1 = \frac{20(s+1)}{s+3}$$

$$\Delta_2 = \frac{10(s+1)}{s+3}$$

Thus

$$I_1 = \frac{\Delta_1}{\Delta} = \underline{\mathbf{\frac{20(s+1)}{(s+3)(3s^2+4s+1)}}}$$

$$I_2 = \frac{\Delta_2}{\Delta} = \underline{\mathbf{\frac{10(s+1)}{(s+3)(3s^2+4s+1)}}} = \frac{I_1}{2}$$

Chapter 16, Solution 28.

Consider the circuit shown below.

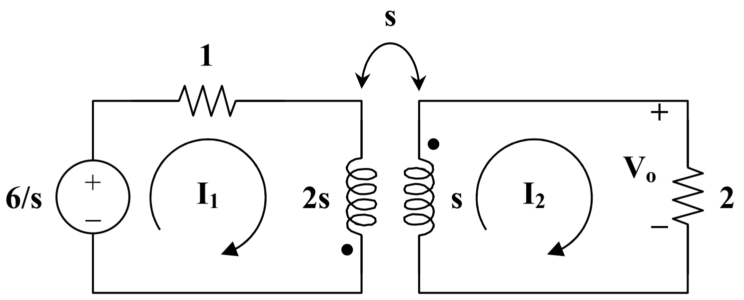

For mesh 1,

$$\frac{6}{s} = (1+2s)\,I_1 + s\,I_2 \qquad (1)$$

For mesh 2,

$$0 = s\,I_1 + (2+s)\,I_2$$

$$I_1 = -\left(1+\frac{2}{s}\right)I_2 \qquad (2)$$

Substituting (2) into (1) gives

$$\frac{6}{s} = -(1+2s)\left(1+\frac{2}{s}\right)I_2 + s\,I_2 = \frac{-(s^2+5s+2)}{s}I_2$$

or $$I_2 = \frac{-6}{s^2+5s+2}$$

$$V_o = 2I_2 = \frac{-12}{s^2 + 5s + 2} = \frac{-12}{(s + 0.438)(s + 4.561)}$$

Since the roots of $s^2 + 5s + 2 = 0$ are -0.438 and -4.561,

$$V_o = \frac{A}{s + 0.438} + \frac{B}{s + 4.561}$$

$$A = \frac{-12}{4.123} = -2.91, \qquad B = \frac{-12}{-4.123} = 2.91$$

$$V_o(s) = \frac{-2.91}{s + 0.438} + \frac{2.91}{s + 4.561}$$

$$v_o(t) = \mathbf{2.91\left[e^{-4.561t} - e^{0.438t}\right] u(t)\ V}$$

Chapter 16, Solution 29.

Consider the following circuit.

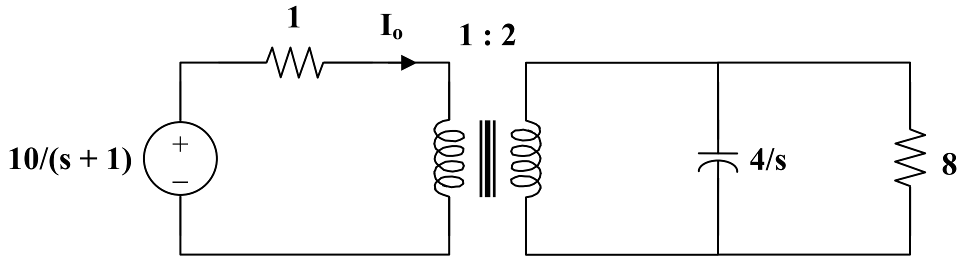

Let $Z_L = 8 \| \frac{4}{s} = \frac{(8)(4/s)}{8 + 4/s} = \frac{8}{2s + 1}$

When this is reflected to the primary side,

$$Z_{in} = 1 + \frac{Z_L}{n^2}, \quad n = 2$$

$$Z_{in} = 1 + \frac{2}{2s + 1} = \frac{2s + 3}{2s + 1}$$

$$I_o = \frac{10}{s + 1} \cdot \frac{1}{Z_{in}} = \frac{10}{s + 1} \cdot \frac{2s + 1}{2s + 3}$$

$$I_o = \frac{10s+5}{(s+1)(s+1.5)} = \frac{A}{s+1} + \frac{B}{s+1.5}$$

$$A = -10, \qquad B = 20$$

$$I_o(s) = \frac{-10}{s+1} + \frac{20}{s+1.5}$$

$$i_o(t) = \underline{\mathbf{10\left[2\,e^{-1.5t} - e^{-t}\right]u(t)\ A}}$$

Chapter 16, Solution 30.

$$Y(s) = H(s)\,X(s), \qquad X(s) = \frac{4}{s+1/3} = \frac{12}{3s+1}$$

$$Y(s) = \frac{12\,s^2}{(3s+1)^2} = \frac{4}{3} - \frac{8s+4/3}{(3s+1)^2}$$

$$Y(s) = \frac{4}{3} - \frac{8}{9}\cdot\frac{s}{(s+1/3)^2} - \frac{4}{27}\cdot\frac{1}{(s+1/3)^2}$$

$$\text{Let } G(s) = \frac{-8}{9}\cdot\frac{s}{(s+1/3)^2}$$

Using the time differentiation property,

$$g(t) = \frac{-8}{9}\cdot\frac{d}{dt}(t\,e^{-t/3}) = \frac{-8}{9}\left(\frac{-1}{3}t\,e^{-t/3} + e^{-t/3}\right)$$

$$g(t) = \frac{8}{27}t\,e^{-t/3} - \frac{8}{9}e^{-t/3}$$

Hence,

$$y(t) = \frac{4}{3}u(t) + \frac{8}{27}t\,e^{-t/3} - \frac{8}{9}e^{-t/3} - \frac{4}{27}t\,e^{-t/3}$$

$$y(t) = \underline{\mathbf{\frac{4}{3}u(t) - \frac{8}{9}e^{-t/3} + \frac{4}{27}t\,e^{-t/3}}}$$

Chapter 16, Solution 31.

$$x(t) = u(t) \longrightarrow X(s) = \frac{1}{s}$$

$$y(t) = 10\cos(2t) \longrightarrow Y(s) = \frac{10s}{s^2 + 4}$$

$$H(s) = \frac{Y(s)}{X(s)} = \underline{\mathbf{\frac{10s^2}{s^2 + 4}}}$$

Chapter 16, Solution 32.

(a) $Y(s) = H(s)\,X(s)$

$$= \frac{s+3}{s^2 + 4s + 5} \cdot \frac{1}{s}$$

$$= \frac{s+3}{s(s^2 + 4s + 5)} = \frac{A}{s} + \frac{Bs + C}{s^2 + 4s + 5}$$

$$s + 3 = A(s^2 + 4s + 5) + Bs^2 + Cs$$

Equating coefficients :

s^0: $\quad 3 = 5A \longrightarrow A = 3/5$

s^1: $\quad 1 = 4A + C \longrightarrow C = 1 - 4A = -7/5$

s^2: $\quad 0 = A + B \longrightarrow B = -A = -3/5$

$$Y(s) = \frac{3/5}{s} - \frac{1}{5} \cdot \frac{3s + 7}{s^2 + 4s + 5}$$

$$Y(s) = \frac{0.6}{s} - \frac{1}{5} \cdot \frac{3(s+2) + 1}{(s+2)^2 + 1}$$

$$y(t) = \underline{\left[\mathbf{0.6 - 0.6e^{-2t}\cos(t) - 0.2e^{-2t}\sin(t)}\right]\mathbf{u(t)}}$$

(b) $x(t) = 6\,t\,e^{-2t} \longrightarrow X(s) = \dfrac{6}{(s+2)^2}$

$$Y(s) = H(s)\,X(s) = \frac{s+3}{s^2+4s+5} \cdot \frac{6}{(s+2)^2}$$

$$Y(s) = \frac{6(s+3)}{(s+2)^2(s^2+4s+5)} = \frac{A}{s+2} + \frac{B}{(s+2)^2} + \frac{Cs+D}{s^2+4s+5}$$

Equating coefficients :

s^3: $0 = A + C \longrightarrow C = -A$ (1)

s^2: $0 = 6A + B + 4C + D = 2A + B + D$ (2)

s^1: $6 = 13A + 4B + 4C + 4D = 9A + 4B + 4D$ (3)

s^0: $18 = 10A + 5B + 4D = 2A + B$ (4)

Solving (1), (2), (3), and (4) gives

$A = 6$, $B = 6$, $C = -6$, $D = -18$

$$Y(s) = \frac{6}{s+2} + \frac{6}{(s+2)^2} - \frac{6s+18}{(s+2)^2+1}$$

$$Y(s) = \frac{6}{s+2} + \frac{6}{(s+2)^2} - \frac{6(s+2)}{(s+2)^2+1} - \frac{6}{(s+2)^2+1}$$

$$y(t) = \underline{\left[\mathbf{6\,e^{-2t} + 6\,t\,e^{-2t} - 6\,e^{-2t}\cos(t) - 6\,e^{-2t}\sin(t)}\right]\mathbf{u(t)}}$$

Chapter 16, Solution 33.

$$H(s) = \frac{Y(s)}{X(s)}, \qquad X(s) = \frac{1}{s}$$

$$Y(s) = \frac{4}{s} + \frac{1}{2(s+3)} - \frac{2s}{(s+2)^2+16} - \frac{(3)(4)}{(s+2)^2+16}$$

$$H(s) = s\,Y(s) = \underline{\mathbf{4 + \frac{s}{2(s+3)} - \frac{2s^2}{s^2+4s+20} - \frac{12s}{s^2+4s+20}}}$$

Chapter 16, Solution 34.

Consider the following circuit.

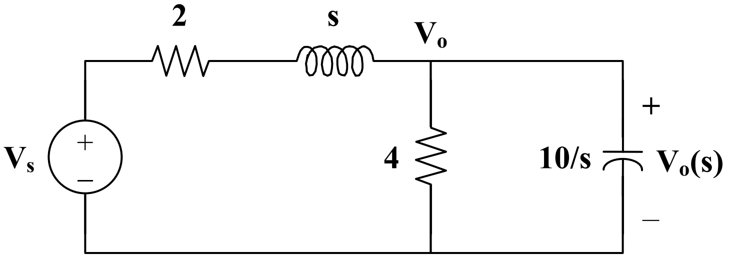

Using nodal analysis,

$$\frac{V_s - V_o}{s+2} = \frac{V_o}{4} + \frac{V_o}{10/s}$$

$$V_s = (s+2)\left(\frac{1}{s+2} + \frac{1}{4} + \frac{s}{10}\right)V_o = \left(1 + \frac{1}{4}(s+2) + \frac{1}{10}(s^2 + 2s)\right)V_o$$

$$V_s = \frac{1}{20}\left(2s^2 + 9s + 30\right)V_o$$

$$\frac{V_o}{V_s} = \underline{\mathbf{\frac{20}{2s^2 + 9s + 30}}}$$

Chapter 16, Solution 35.

Consider the following circuit.

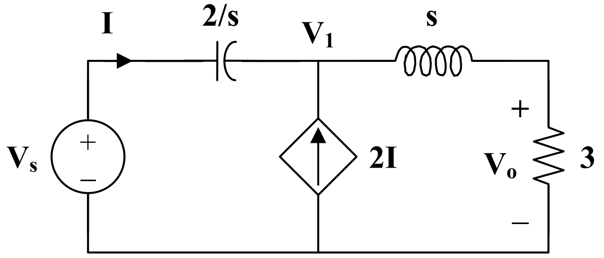

At node 1,

$$2I + I = \frac{V_1}{s+3}, \qquad \text{where} \quad I = \frac{V_s - V_1}{2/s}$$

$$3 \cdot \frac{V_s - V_1}{2/s} = \frac{V_1}{s+3}$$

$$\frac{V_1}{s+3} = \frac{3s}{2} V_s - \frac{3s}{2} V_1$$

$$\left(\frac{1}{s+3} + \frac{3s}{2} \right) V_1 = \frac{3s}{2} V_s$$

$$V_1 = \frac{3s\,(s+3)}{3s^2 + 9s + 2} V_s$$

$$V_o = \frac{3}{s+3} V_1 = \frac{9s}{3s^2 + 9s + 2} V_s$$

$$H(s) = \frac{V_o}{V_s} = \underline{\mathbf{\frac{9s}{3s^2 + 9s + 2}}}$$

Chapter 16, Solution 36.

From the previous problem,

$$3\,I = \frac{V_1}{s+3} = \frac{3s}{3s^2 + 9s + 2} V_s$$

$$I = \frac{s}{3s^2 + 9s + 2} V_s$$

But $\quad V_s = \dfrac{3s^2 + 9s + 2}{9s} V_o$

$$I = \frac{s}{3s^2 + 9s + 2} \cdot \frac{3s^2 + 9s + 2}{9s} V_o = \frac{V_o}{9}$$

$$H(s) = \frac{V_o}{I} = \underline{\mathbf{9}}$$

Chapter 16, Solution 37.

(a) Consider the circuit shown below.

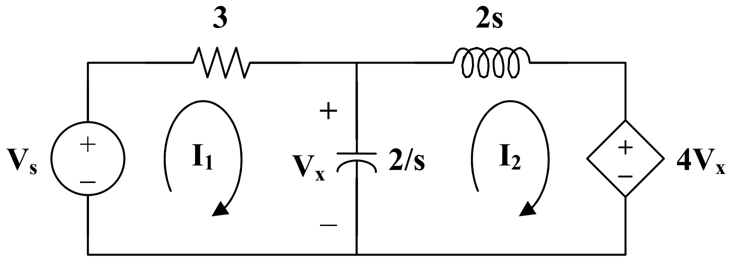

For loop 1,

$$V_s = \left(3 + \frac{2}{s}\right)I_1 - \frac{2}{s}I_2 \qquad (1)$$

For loop 2,

$$4V_x + \left(2s + \frac{2}{s}\right)I_2 - \frac{2}{s}I_1 = 0$$

But, $V_x = (I_1 - I_2)\left(\frac{2}{s}\right)$

So, $\frac{8}{s}(I_1 - I_2) + \left(2s + \frac{2}{s}\right)I_2 - \frac{2}{s}I_1 = 0$

$$0 = \frac{-6}{s}I_1 + \left(\frac{6}{s} - 2s\right)I_2 \qquad (2)$$

In matrix form, (1) and (2) become

$$\begin{bmatrix} V_s \\ 0 \end{bmatrix} = \begin{bmatrix} 3 + 2/s & -2/s \\ -6/s & 6/s - 2s \end{bmatrix} \begin{bmatrix} I_1 \\ I_2 \end{bmatrix}$$

$$\Delta = \left(3 + \frac{2}{s}\right)\left(\frac{6}{s} - 2s\right) - \left(\frac{6}{s}\right)\left(\frac{2}{s}\right)$$

$$\Delta = \frac{18}{s} - 6s - 4$$

$$\Delta_1 = \left(\frac{6}{s} - 2s\right)V_s, \qquad \Delta_2 = \frac{6}{s}V_s$$

$$I_1 = \frac{\Delta_1}{\Delta} = \frac{(6/s - 2s)}{18/s - 4 - 6s} V_s$$

$$\frac{I_1}{V_s} = \frac{3/s - s}{9/s - 2 - 3} = \underline{\mathbf{\frac{s^2 - 3}{3s^2 + 2s - 9}}}$$

(b) $I_2 = \dfrac{\Delta_2}{\Delta}$

$$V_x = \frac{2}{s}(I_1 - I_2) = \frac{2}{s}\left(\frac{\Delta_1 - \Delta_2}{\Delta}\right)$$

$$V_x = \frac{2/s\, V_s\,(6/s - 2s - 6/s)}{\Delta} = \frac{-4V_s}{\Delta}$$

$$\frac{I_2}{V_x} = \frac{6/s\, V_s}{-4V_s} = \underline{\mathbf{\frac{-3}{2s}}}$$

Chapter 16, Solution 38.

(a) Consider the following circuit.

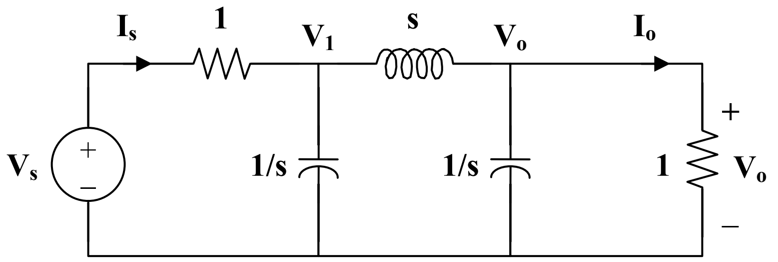

At node 1,

$$\frac{V_s - V_1}{1} = s\,V_1 + \frac{V_1 - V_o}{s}$$

$$V_s = \left(1 + s + \frac{1}{s}\right)V_1 - \frac{1}{s}V_o \qquad (1)$$

At node o,

$$\frac{V_1 - V_o}{s} = s\,V_o + V_o = (s+1)\,V_o$$

$$V_1 = (s^2 + s + 1)\,V_o \qquad (2)$$

Substituting (2) into (1)

$$V_s = (s + 1 + 1/s)(s^2 + s + 1)V_o - 1/s\,V_o$$

$$V_s = (s^3 + 2s^2 + 3s + 2)V_o$$

$$H_1(s) = \frac{V_o}{V_s} = \underline{\mathbf{\frac{1}{s^3 + 2s^2 + 3s + 2}}}$$

(b) $I_s = V_s - V_1 = (s^3 + 2s^2 + 3s + 2)V_o - (s^2 + s + 1)V_o$

$I_s = (s^3 + s^2 + 2s + 1)V_o$

$$H_2(s) = \frac{V_o}{I_s} = \underline{\mathbf{\frac{1}{s^3 + s^2 + 2s + 1}}}$$

(c) $I_o = \dfrac{V_o}{1}$

$$H_3(s) = \frac{I_o}{I_s} = \frac{V_o}{I_s} = H_2(s) = \underline{\mathbf{\frac{1}{s^3 + s^2 + 2s + 1}}}$$

(d). $H_4(s) = \dfrac{I_o}{V_s} = \dfrac{V_o}{V_s} = H_1(s) = \underline{\mathbf{\dfrac{1}{s^3 + 2s^2 + 3s + 2}}}$

Chapter 16, Solution 39.

Consider the circuit below.

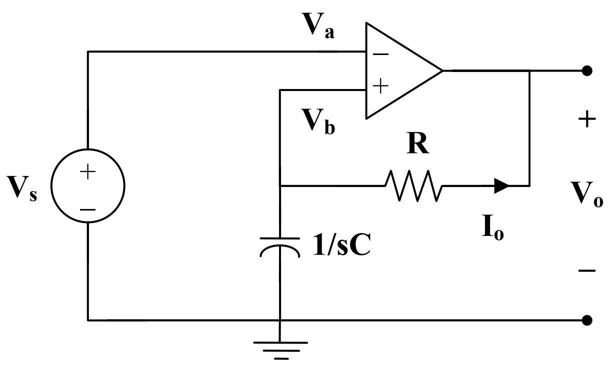

Since no current enters the op amp, I_o flows through both R and C.

$$V_o = -I_o\left(R + \frac{1}{sC}\right)$$

$$V_a = V_b = V_s = \frac{-I_o}{sC}$$

$$H(s) = \frac{V_o}{V_s} = \frac{R + 1/sC}{1/sC} = \underline{\mathbf{sRC + 1}}$$

Chapter 16, Solution 40.

(a) $$H(s) = \frac{V_o}{V_s} = \frac{R}{R + sL} = \frac{R/L}{s + R/L}$$

$$h(t) = \underline{\mathbf{\frac{R}{L} e^{-Rt/L}\, u(t)}}$$

(b) $$v_s(t) = u(t) \longrightarrow V_s(s) = 1/s$$

$$V_o = \frac{R/L}{s + R/L} V_s = \frac{R/L}{s(s + R/L)} = \frac{A}{s} + \frac{B}{s + R/L}$$

$$A = 1, \qquad B = -1$$

$$V_o = \frac{1}{s} - \frac{1}{s + R/L}$$

$$v_o(t) = u(t) - e^{-Rt/L} u(t) = \underline{\mathbf{(1 - e^{-Rt/L})\, u(t)}}$$

Chapter 16, Solution 41.

$$Y(s) = H(s)\, X(s)$$

$$h(t) = 2 e^{-t} u(t) \longrightarrow H(s) = \frac{2}{s + 1}$$

$$v_i(t) = 5u(t) \longrightarrow V_i(s) = X(s) = 5/s$$

$$Y(s) = \frac{10}{s(s+1)} = \frac{A}{s} + \frac{B}{s+1}$$

$$A = 10, \qquad B = -10$$

$$Y(s) = \frac{10}{s} - \frac{10}{s+1}$$

$$y(t) = \underline{\mathbf{10(1 - e^{-t})u(t)}}$$

Chapter 16, Solution 42.

$$2s\,Y(s) + Y(s) = X(s)$$

$$(2s+1)\,Y(s) = X(s)$$

$$H(s) = \frac{Y(s)}{X(s)} = \frac{1}{2s+1} = \frac{1}{2(s+1/2)}$$

$$h(t) = \underline{\mathbf{0.5e^{-t/2}\,u(t)}}$$

Chapter 16, Solution 43.

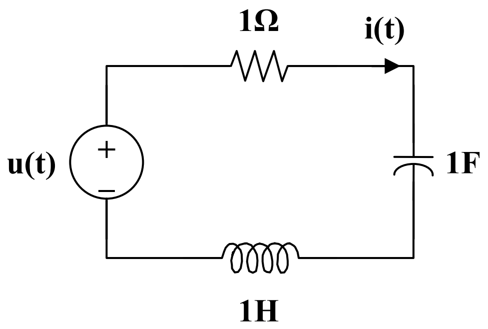

First select the inductor current i_L and the capacitor voltage v_C to be the state variables.

Applying KVL we get:

$$-u(t) + i + v_C + i' = 0; \;\; i = v_C'$$

Thus,

$$v_C' = i$$
$$i' = -v_C - i + u(t)$$

Finally we get,

$$\begin{bmatrix} v_C' \\ i' \end{bmatrix} = \begin{bmatrix} 0 & 1 \\ -1 & -1 \end{bmatrix} \begin{bmatrix} v_C \\ i \end{bmatrix} + \begin{bmatrix} 0 \\ 1 \end{bmatrix} u(t); \; i(t) = \begin{bmatrix} 0 & 1 \end{bmatrix} \begin{bmatrix} v_C \\ i \end{bmatrix} + [0]u(t)$$

Chapter 16, Solution 44.

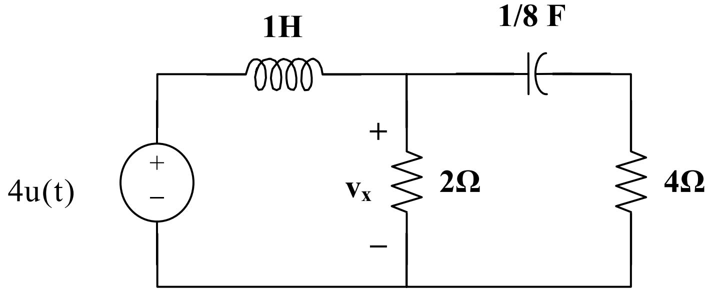

First select the inductor current i_L and the capacitor voltage v_C to be the state variables.

Applying KCL we get:

$$-i_L + \frac{v_x}{2} + \frac{v_C'}{8} = 0; \quad \text{or} \quad v_C' = 8i_L - 4v_x$$
$$i_L' = 4u(t) - v_x$$
$$v_x = v_C + 4\frac{v_C'}{8} = v_C + \frac{v_C'}{2} = v_C + 4i_L - 2v_x; \text{ or } v_x = 0.3333v_C + 1.3333i_L$$

$$v_C' = 8i_L - 1.3333v_C - 5.333i_L = -1.3333v_C + 2.666i_L$$
$$i_L' = 4u(t) - 0.3333v_C - 1.3333i_L$$

Now we can write the state equations.

$$\begin{bmatrix} v_C' \\ i_L' \end{bmatrix} = \begin{bmatrix} -1.3333 & 2.666 \\ -0.3333 & -1.3333 \end{bmatrix} \begin{bmatrix} v_C \\ i_L \end{bmatrix} + \begin{bmatrix} 0 \\ 4 \end{bmatrix} u(t); \; v_x = \begin{bmatrix} 0.3333 \\ 1.3333 \end{bmatrix} \begin{bmatrix} v_C \\ i_L \end{bmatrix}$$

Chapter 16, Solution 45.

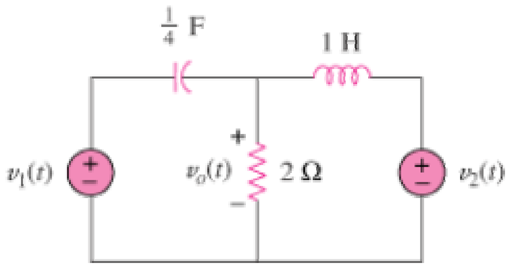

First select the inductor current i_L (current flowing left to right) and the capacitor voltage v_C (voltage positive on the left and negative on the right) to be the state variables.

Applying KCL we get:

$$-\frac{v_C'}{4}+\frac{v_o}{2}+i_L=0 \text{ or } v_C'=4i_L+2v_o$$

$$i_L'=v_o-v_2$$

$$v_o=-v_C+v_1$$

$$v_C'=4i_L-2v_C+2v_1$$

$$i_L'=-v_C+v_1-v_2$$

$$\begin{bmatrix} i_L' \\ v_C' \end{bmatrix}=\underline{\begin{bmatrix} 0 & -1 \\ 4 & -2 \end{bmatrix}\begin{bmatrix} i_L \\ v_C \end{bmatrix}+\begin{bmatrix} 1 & -1 \\ 2 & 0 \end{bmatrix}\begin{bmatrix} v_1(t) \\ v_2(t) \end{bmatrix}};\ v_o(t)=\underline{\begin{bmatrix} 0 & -1 \end{bmatrix}\begin{bmatrix} i_L \\ v_C \end{bmatrix}+\begin{bmatrix} 1 & 0 \end{bmatrix}\begin{bmatrix} v_1(t) \\ v_2(t) \end{bmatrix}}$$

Chapter 16, Solution 46.

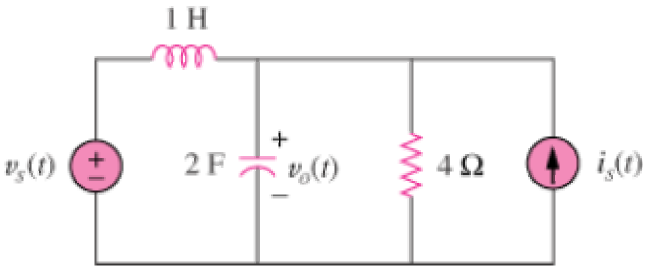

First select the inductor current i_L (left to right) and the capacitor voltage v_C to be the state variables.

Letting $v_o = v_C$ and applying KCL we get:

$$-i_L + v_C' + \frac{v_C}{4} - i_s = 0 \text{ or } v_C' = -0.25v_C + i_L + i_s$$

$$i_L' = -v_C + v_s$$

Thus,

$$\begin{bmatrix} v_C' \\ i_L' \end{bmatrix} = \underline{\begin{bmatrix} -0.25 & 1 \\ -1 & 0 \end{bmatrix}\begin{bmatrix} v_C' \\ i_L' \end{bmatrix} + \begin{bmatrix} 0 & 1 \\ 1 & 0 \end{bmatrix}\begin{bmatrix} v_s \\ i_s \end{bmatrix}}; \; v_o(t) = \underline{\begin{bmatrix} 1 \\ 0 \end{bmatrix}\begin{bmatrix} v_C \\ i_L \end{bmatrix} + \begin{bmatrix} 0 & 0 \\ 0 & 0 \end{bmatrix}\begin{bmatrix} v_s \\ i_s \end{bmatrix}}$$

Chapter 16, Solution 47.

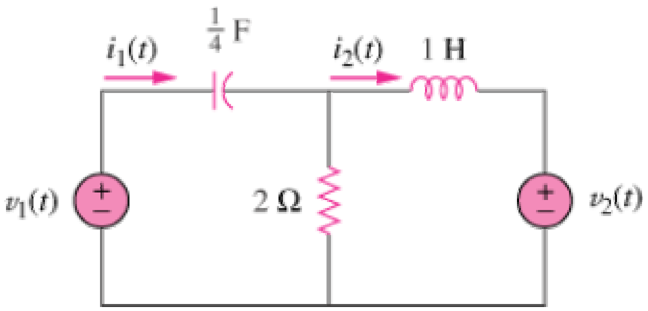

First select the inductor current i_L (left to right) and the capacitor voltage v_C (+ on the left) to be the state variables.

Letting $i_1 = \frac{v_C'}{4}$ and $i_2 = i_L$ and applying KVL we get:

Loop 1:

$$-v_1 + v_C + 2\left(\frac{v_C'}{4} - i_L\right) = 0 \text{ or } v_C' = 4i_L - 2v_C + 2v_1$$

Loop 2:

$$2\left(i_L - \frac{v_C'}{4}\right) + i_L' + v_2 = 0 \text{ or}$$

$$i_L' = -2i_L + \frac{4i_L - 2v_C + 2v_1}{2} - v_2 = -v_C + v_1 - v_2$$

$$i_1 = \frac{4i_L - 2v_C + 2v_1}{4} = i_L - 0.5v_C + 0.5v_1$$

$$\begin{bmatrix} i_L' \\ v_C' \end{bmatrix} = \underline{\begin{bmatrix} 0 & -1 \\ 4 & -2 \end{bmatrix}\begin{bmatrix} i_L \\ v_C \end{bmatrix} + \begin{bmatrix} 1 & -1 \\ 2 & 0 \end{bmatrix}\begin{bmatrix} v_1(t) \\ v_2(t) \end{bmatrix}};\ \begin{bmatrix} i_1(t) \\ i_2(t) \end{bmatrix} = \underline{\begin{bmatrix} 1 & -0.5 \\ 1 & 0 \end{bmatrix}\begin{bmatrix} i_L \\ v_C \end{bmatrix} + \begin{bmatrix} 0.5 & 0 \\ 0 & 0 \end{bmatrix}\begin{bmatrix} v_1(t) \\ v_2(t) \end{bmatrix}}$$

Chapter 16, Solution 48.

Let $x_1 = y(t)$. Thus, $x_1' = y' = x_2$ and $x_2' = y'' = -3x_1 - 4x_2 + z(t)$

This gives our state equations.

$$\begin{bmatrix} x_1' \\ x_2' \end{bmatrix} = \underline{\begin{bmatrix} 0 & 1 \\ -3 & -4 \end{bmatrix}\begin{bmatrix} x_1 \\ x_2 \end{bmatrix} + \begin{bmatrix} 0 \\ 1 \end{bmatrix} z(t)};\ \ y(t) = \underline{\begin{bmatrix} 1 & 0 \end{bmatrix}\begin{bmatrix} x_1 \\ x_2 \end{bmatrix} + \begin{bmatrix} 0 \end{bmatrix} z(t)}$$

Chapter 16, Solution 49.

Let $x_1 = y(t)$ and $x_2 = x_1' - z = y' - z$ or $y' = x_2 + z$

Thus,

$$x_2' = y'' - z' = -6x_1 - 5(x_2 + z) + z' + 2z - z' = -6x_1 - 5x_2 - 3z$$

This now leads to our state equations,

$$\begin{bmatrix} x_1' \\ x_2' \end{bmatrix} = \underline{\begin{bmatrix} 0 & 1 \\ -6 & -5 \end{bmatrix}\begin{bmatrix} x_1 \\ x_2 \end{bmatrix} + \begin{bmatrix} 1 \\ -3 \end{bmatrix} z(t)};\ y(t) = \underline{\begin{bmatrix} 1 & 0 \end{bmatrix}\begin{bmatrix} x_1 \\ x_2 \end{bmatrix} + \begin{bmatrix} 0 \end{bmatrix} z(t)}$$

Chapter 16, Solution 50.

Let $x_1 = y(t)$, $x_2 = x_1'$, and $x_3 = x_2'$.
Thus,

$$x_3'' = -6x_1 - 11x_2 - 6x_3 + z(t)$$

We can now write our state equations.

$$\begin{bmatrix} x_1' \\ x_2' \\ x_3' \end{bmatrix} = \underline{\begin{bmatrix} 0 & 1 & 0 \\ 0 & 0 & 1 \\ -6 & -11 & -6 \end{bmatrix}\begin{bmatrix} x_1 \\ x_2 \\ x_3 \end{bmatrix} + \begin{bmatrix} 0 \\ 0 \\ 1 \end{bmatrix} z(t)};\ y(t) = \underline{\begin{bmatrix} 1 & 0 & 0 \end{bmatrix}\begin{bmatrix} x_1 \\ x_2 \\ x_3 \end{bmatrix} + \begin{bmatrix} 0 \end{bmatrix} z(t)}$$

Chapter 16, Solution 51.

We transform the state equations into the s-domain and solve using Laplace transforms.

$$sX(s) - x(0) = AX(s) + B\left(\frac{1}{s}\right)$$

Assume the initial conditions are zero.

$$(sI - A)X(s) = B\left(\frac{1}{s}\right)$$

$$X(s) = \begin{bmatrix} s+4 & -4 \\ 2 & s \end{bmatrix}^{-1} \begin{bmatrix} 0 \\ 2 \end{bmatrix}\left(\frac{1}{s}\right) = \frac{1}{s^2 + 4s + 8}\begin{bmatrix} s & 4 \\ 2 & s+4 \end{bmatrix}\begin{bmatrix} 0 \\ (2/s) \end{bmatrix}$$

$$Y(s) = X_1(s) = \frac{8}{s(s^2 + 4s + 8)} = \frac{1}{s} + \frac{-s-4}{s^2 + 4s + 8}$$

$$= \frac{1}{s} + \frac{-s-4}{(s+2)^2 + 2^2} = \frac{1}{s} + \frac{-(s+2)}{(s+2)^2 + 2^2} + \frac{-2}{(s+2)^2 + 2^2}$$

y(t) = $\underline{\left(1 - e^{-2t}(\cos 2t + \sin 2t)\right)u(t)}$

Chapter 16, Solution 52.

Assume that the initial conditions are zero. Using Laplace transforms we get,

$$X(s) = \begin{bmatrix} s+2 & 1 \\ -2 & s+4 \end{bmatrix}^{-1} \begin{bmatrix} 1 & 1 \\ 4 & 0 \end{bmatrix}\begin{bmatrix} 1/s \\ 2/s \end{bmatrix} = \frac{1}{s^2 + 6s + 10}\begin{bmatrix} s+4 & -1 \\ 2 & s+2 \end{bmatrix}\begin{bmatrix} 3/s \\ 4/s \end{bmatrix}$$

$$X_1 = \frac{3s+8}{s((s+3)^2 + 1^2)} = \frac{0.8}{s} + \frac{-0.8s - 1.8}{(s+3)^2 + 1^2}$$

$$= \frac{0.8}{s} - 0.8\frac{s+3}{(s+3)^2 + 1^2} + .6\frac{1}{(s+3)^2 + 1^2}$$

$$x_1(t) = (0.8 - 0.8e^{-3t}\cos t + 0.6e^{-3t}\sin t)u(t)$$

$$X_2 = \frac{4s+14}{s((s+3)^2+1^2} = \frac{1.4}{s} + \frac{-1.4s-4.4}{(s+3)^2+1^2}$$

$$= \frac{1.4}{s} - 1.4\frac{s+3}{(s+3)^2+1^2} - 0.2\frac{1}{(s+3)^2+1^2}$$

$$x_2(t) = (1.4 - 1.4e^{-3t}\cos t - 0.2e^{-3t}\sin t)u(t)$$

$$y_1(t) = -2x_1(t) - 2x_2(t) + 2u(t)$$
$$= \underline{(-2.4 + 4.4e^{-3t}\cos t - 0.8e^{-3t}\sin t)u(t)}$$

$$y_2(t) = x_1(t) - 2u(t) = \underline{(-1.2 - 0.8e^{-3t}\cos t + 0.6e^{-3t}\sin t)u(t)}$$

Chapter 16, Solution 53.

If V_o is the voltage across R, applying KCL at the non-reference node gives

$$I_s = \frac{V_o}{R} + sCV_o + \frac{V_o}{sL} = \left(\frac{1}{R} + sC + \frac{1}{sL}\right)V_o$$

$$V_o = \frac{I_s}{\frac{1}{R} + sC + \frac{1}{sL}} = \frac{sRLI_s}{sL + R + s^2RLC}$$

$$I_o = \frac{V_o}{R} = \frac{sLI_s}{s^2RLC + sL + R}$$

$$H(s) = \frac{I_o}{I_s} = \frac{sL}{s^2RLC + sL + R} = \frac{s/RC}{s^2 + s/RC + 1/LC}$$

The roots

$$s_{1,2} = \frac{-1}{2RC} \pm \sqrt{\frac{1}{(2RC)^2} - \frac{1}{LC}}$$

both lie in the left half plane since R, L, and C are positive quantities.

Thus, **<u>the circuit is stable</u>**.

Chapter 16, Solution 54.

(a) $H_1(s) = \dfrac{3}{s+1}$, $\qquad H_2(s) = \dfrac{1}{s+4}$

$$H(s) = H_1(s)H_2(s) = \frac{3}{(s+1)(s+4)}$$

$$h(t) = L^{-1}\left[H(s)\right] = L^{-1}\left[\frac{A}{s+1} + \frac{B}{s+4}\right]$$

$A = 1$, $\qquad B = -1$

$h(t) = \underline{\mathbf{(e^{-t} - e^{-4t})u(t)}}$

(b) Since the poles of H(s) all lie in the left half s-plane, **<u>the system is stable</u>**.

Chapter 16, Solution 55.

Let V_{o1} be the voltage at the output of the first op amp.

$$\frac{V_{o1}}{V_s} = \frac{-1/sC}{R} = \frac{-1}{sRC}, \qquad \frac{V_o}{V_{o1}} = \frac{-1}{sRC}$$

$$H(s) = \frac{V_o}{V_s} = \frac{1}{s^2R^2C^2}$$

$$h(t) = \frac{t}{R^2C^2}$$

$\lim_{t\to\infty} h(t) = \infty$, i.e. the output is unbounded.

Hence, **<u>the circuit is unstable</u>**.

Chapter 16, Solution 56.

$$sL \parallel \frac{1}{sC} = \frac{sL \cdot \frac{1}{sC}}{sL + \frac{1}{sC}} = \frac{sL}{1 + s^2LC}$$

$$\frac{V_2}{V_1} = \frac{\frac{sL}{1+s^2LC}}{R + \frac{sL}{1+s^2LC}} = \frac{sL}{s^2RLC + sL + R}$$

$$\frac{V_2}{V_1} = \frac{s \cdot \frac{1}{RC}}{s^2 + s \cdot \frac{1}{RC} + \frac{1}{LC}}$$

Comparing this with the given transfer function,

$$2 = \frac{1}{RC}, \qquad 6 = \frac{1}{LC}$$

If $R = 1\,k\Omega$, $\quad C = \frac{1}{2R} = \underline{\mathbf{500\ \mu F}}$

$$L = \frac{1}{6C} = \underline{\mathbf{333.3\ H}}$$

Chapter 16, Solution 57.

The circuit in the s-domain is shown below.

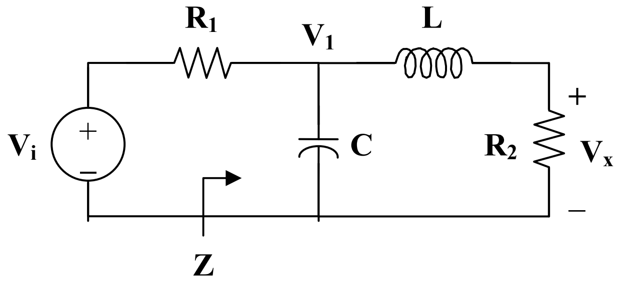

$$Z = \frac{1}{sC} \parallel (R_2 + sL) = \frac{(1/sC)\cdot(R_2 + sL)}{R_2 + sL + 1/sC} = \frac{R_2 + sL}{1 + s^2LC + sR_2C}$$

$$V_1 = \frac{Z}{R_1 + Z} V_i$$

$$V_o = \frac{R_2}{R_2 + sL} V_1 = \frac{R_2}{R_2 + sL} \cdot \frac{Z}{R_1 + Z} V_i$$

$$\frac{V_o}{V_i} = \frac{R_2}{R_2 + sL} \cdot \frac{Z}{R_1 + Z} = \frac{R_2}{R_2 + sL} \cdot \frac{\dfrac{R_2 + sL}{1 + s^2 LC + sR_2 C}}{R_1 + \dfrac{R_2 + sL}{1 + s^2 LC + sR_2 C}}$$

$$\frac{V_o}{V_i} = \frac{R_2}{s^2 R_1 LC + sR_1 R_2 C + R_1 + R_2 + sL}$$

$$\frac{V_o}{V_i} = \frac{\dfrac{R_2}{R_1 LC}}{s^2 + s\left(\dfrac{R_2}{L} + \dfrac{1}{R_1 C}\right) + \dfrac{R_1 + R_2}{R_1 LC}}$$

Comparing this with the given transfer function,

$$5 = \frac{R_2}{R_1 LC} \qquad 6 = \frac{R_2}{L} + \frac{1}{R_1 C} \qquad 25 = \frac{R_1 + R_2}{R_1 LC}$$

Since $R_1 = 4\,\Omega$ and $R_2 = 1\,\Omega$,

$$5 = \frac{1}{4LC} \longrightarrow LC = \frac{1}{20} \tag{1}$$

$$6 = \frac{1}{L} + \frac{1}{4C} \tag{2}$$

$$25 = \frac{5}{4LC} \longrightarrow LC = \frac{1}{20}$$

Substituting (1) into (2),

$$6 = 20C + \frac{1}{4C} \longrightarrow 80C^2 - 24C + 1 = 0$$

Thus, $C = \dfrac{1}{4}, \ \dfrac{1}{20}$

When $C = \frac{1}{4}$, $L = \frac{1}{20C} = \frac{1}{5}$.

When $C = \frac{1}{20}$, $L = \frac{1}{20C} = 1$.

Therefore, there are two possible solutions.
C = **0.25 F** L = **0.2 H** or C = **0.05 F** L = **1 H**

Chapter 16, Solution 58.

We apply KCL at the noninverting terminal at the op amp.

$$(V_s - 0)\,Y_3 = (0 - V_o)(Y_1 - Y_2)$$

$$Y_3\,V_s = -(Y_1 + Y_2)V_o$$

$$\frac{V_o}{V_s} = \frac{-Y_3}{Y_1 + Y_2}$$

Let $Y_1 = sC_1$, $Y_2 = 1/R_1$, $Y_3 = sC_2$

$$\frac{V_o}{V_s} = \frac{-sC_2}{sC_1 + 1/R_1} = \frac{-sC_2/C_1}{s + 1/R_1C_1}$$

Comparing this with the given transfer function,

$$\frac{C_2}{C_1} = 1, \qquad \frac{1}{R_1C_1} = 10$$

If $R_1 = 1\ \text{k}\Omega$,

$$C_1 = C_2 = \frac{1}{10^4} = \underline{\mathbf{100\ \mu F}}$$

Chapter 16, Solution 59.

Consider the circuit shown below. We notice that $V_3 = V_o$ and $V_2 = V_3 = V_o$.

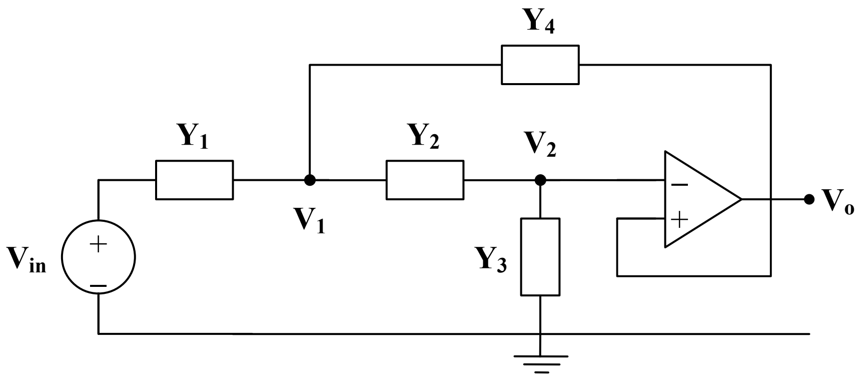

At node 1,

$$(V_{in} - V_1)Y_1 = (V_1 - V_o)Y_2 + (V_1 - V_o)Y_4$$

$$V_{in}\,Y_1 = V_1(Y_1 + Y_2 + Y_4) - V_o(Y_2 + Y_4) \qquad (1)$$

At node 2,

$$(V_1 - V_o)Y_2 = (V_o - 0)Y_3$$

$$V_1\,Y_2 = (Y_2 + Y_3)V_o$$

$$V_1 = \frac{Y_2 + Y_3}{Y_2}V_o \qquad (2)$$

Substituting (2) into (1),

$$V_{in}\,Y_1 = \frac{Y_2 + Y_3}{Y_2}\cdot(Y_1 + Y_2 + Y_4)V_o - V_o(Y_2 + Y_4)$$

$$V_{in}Y_1Y_2 = V_o(Y_1Y_2 + Y_2^2 + Y_2Y_4 + Y_1Y_3 + Y_2Y_3 + Y_3Y_4 - Y_2^2 - Y_2Y_4)$$

$$\frac{V_o}{V_{in}} = \frac{Y_1Y_2}{Y_1Y_2 + Y_1Y_3 + Y_2Y_3 + Y_3Y_4}$$

Y_1 and Y_2 must be resistive, while Y_3 and Y_4 must be capacitive.

Let $\quad Y_1 = \frac{1}{R_1}, \quad Y_2 = \frac{1}{R_2}, \quad Y_3 = sC_1, \quad Y_4 = sC_2$

$$\frac{V_o}{V_{in}} = \frac{\frac{1}{R_1R_2}}{\frac{1}{R_1R_2} + \frac{sC_1}{R_1} + \frac{sC_1}{R_2} + s^2C_1C_2}$$

$$\frac{V_o}{V_{in}} = \frac{\frac{1}{R_1R_2C_1C_2}}{s^2 + s\cdot\left(\frac{R_1+R_2}{R_1R_2C_2}\right) + \frac{1}{R_1R_2C_1C_2}}$$

Choose $R_1 = 1\,k\Omega$, then

$$\frac{1}{R_1R_2C_1C_2} = 10^6 \qquad \text{and} \qquad \frac{R_1+R_2}{R_1R_2C_2} = 100$$

We have three equations and four unknowns. Thus, there is a family of solutions. One such solution is

$R_2 = \underline{\mathbf{1\ k\Omega}}$, $C_1 = \underline{\mathbf{50\,nF}}$, $C_2 = \underline{\mathbf{20\ \mu F}}$

Chapter 16, Solution 60.

With the following MATLAB codes, the Bode plots are generated as shown below.

```
num=[1 1];
den= [1 5 6];
bode(num,den);
```

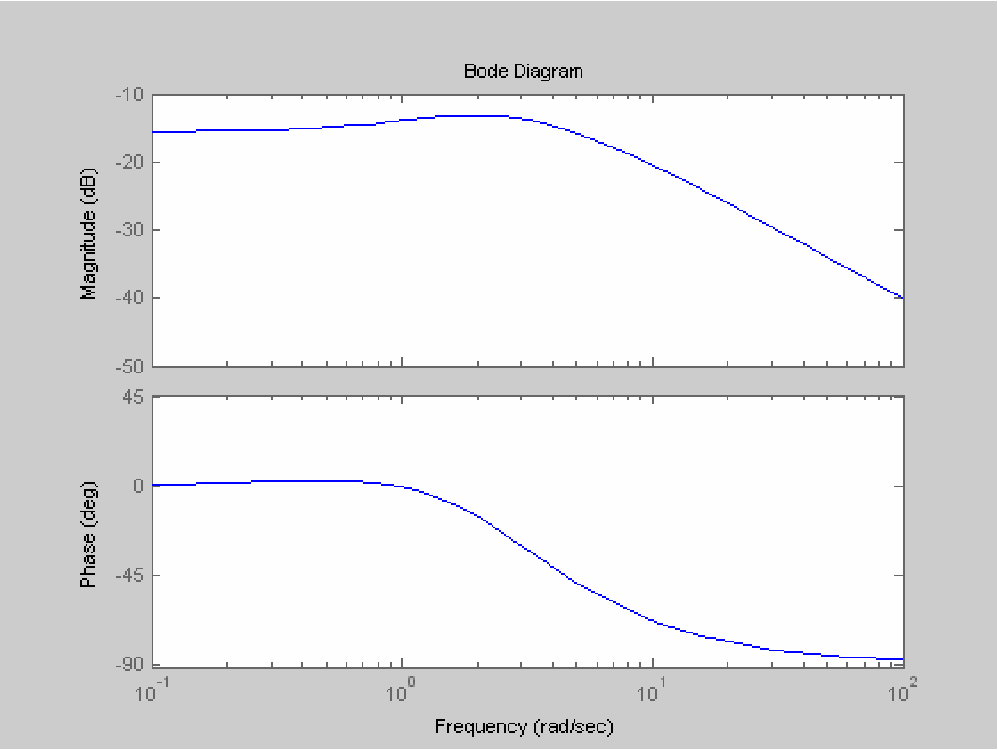

Chapter 16, Solution 61.

We use the following codes to obtain the Bode plots below.

```
num=[1 4];
den= [1 6  11  6];
bode(num,den);
```

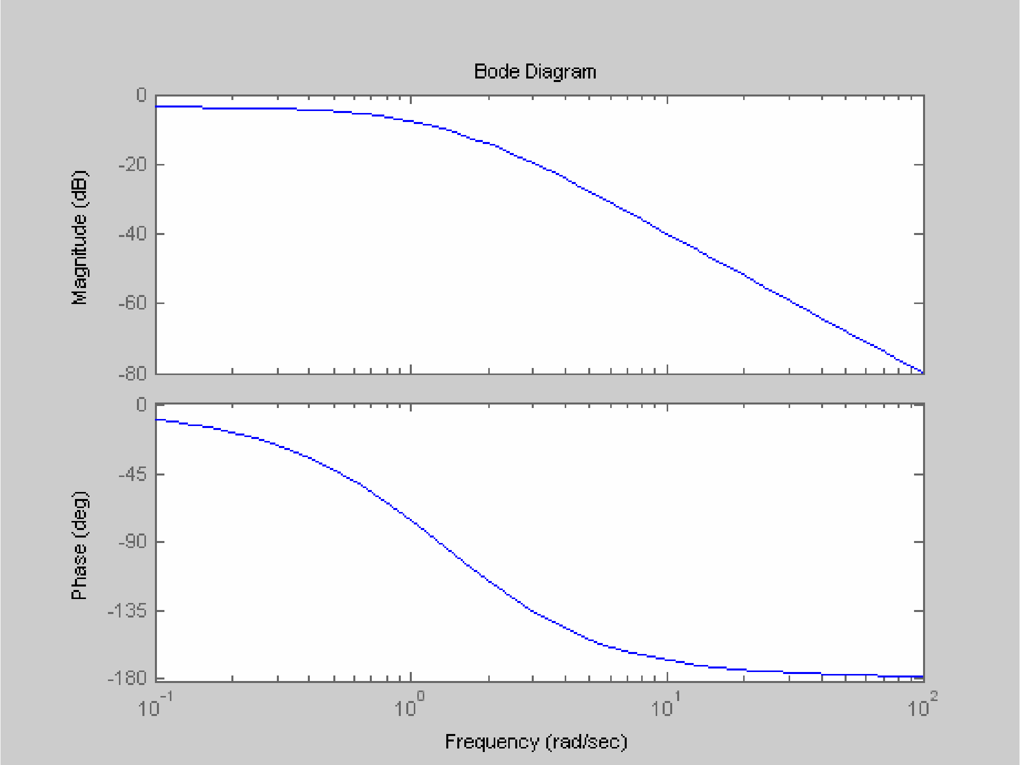

Chapter 16, Solution 62.

The following codes are used to obtain the Bode plots below.

```
num=[1 1];
den= [1 0.5  1];
bode(num,den);
```

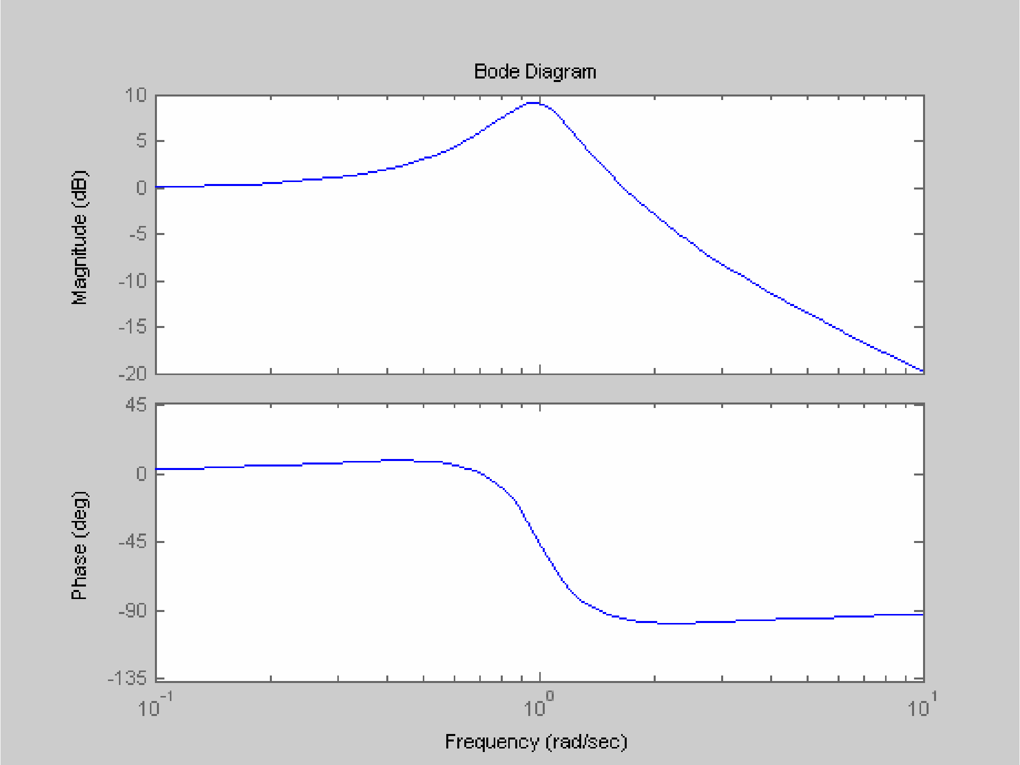

Chapter 16, Solution 63.

We use the following commands to obtain the unit step as shown below.

```
num=[1 2];
den= [1  4  3];
step(num,den);
```

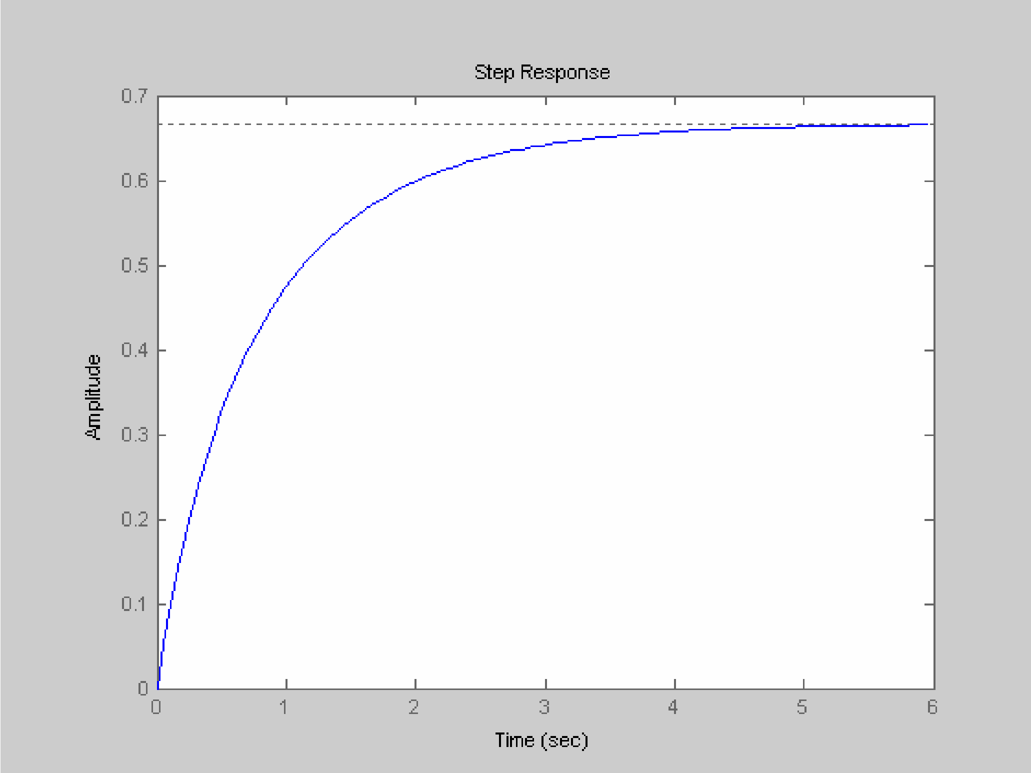

Chapter 16, Solution 64.

With the following commands, we obtain the response as shown below.

```
t=0:0.01:5;
x=10*exp(-t);
num=4;
den= [1  5  6];
y=lsim(num,den,x,t);
plot(t,y)
```

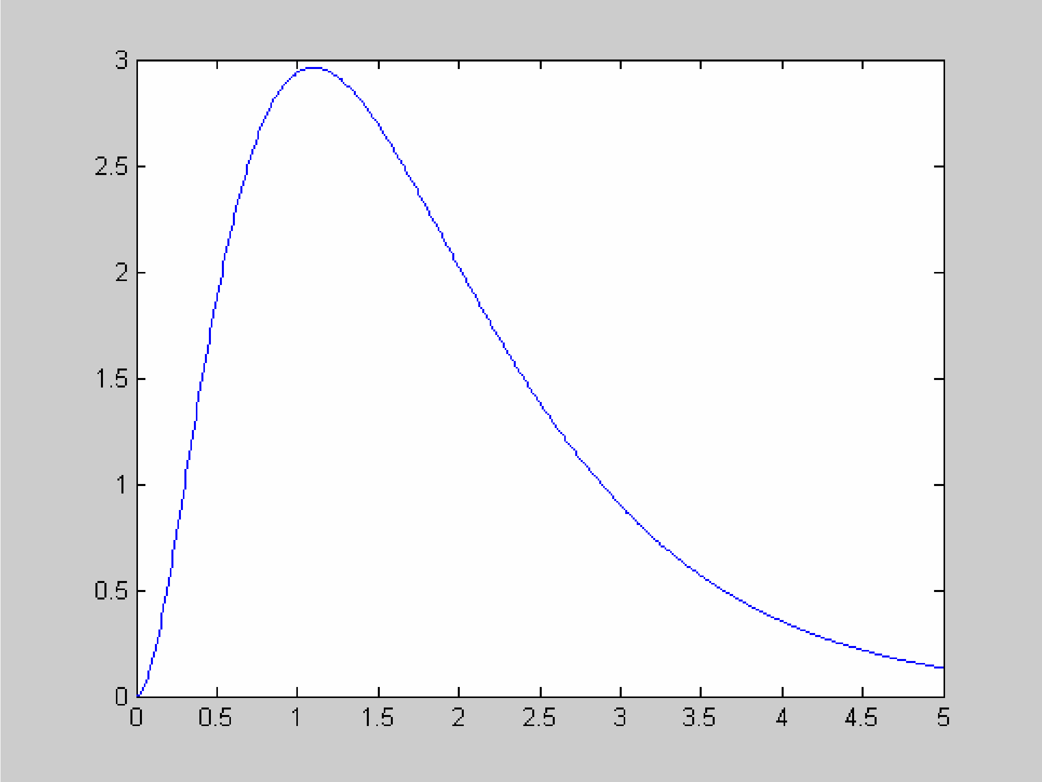

Chapter 16, Solution 65.

We obtain the response below using the following commands.

```
t=0:0.01:5;
x=1 + 3*exp(-2*t);
num=[1 0];
den= [1  6  11  6];
y=lsim(num,den,x,t);
plot(t,y)
```

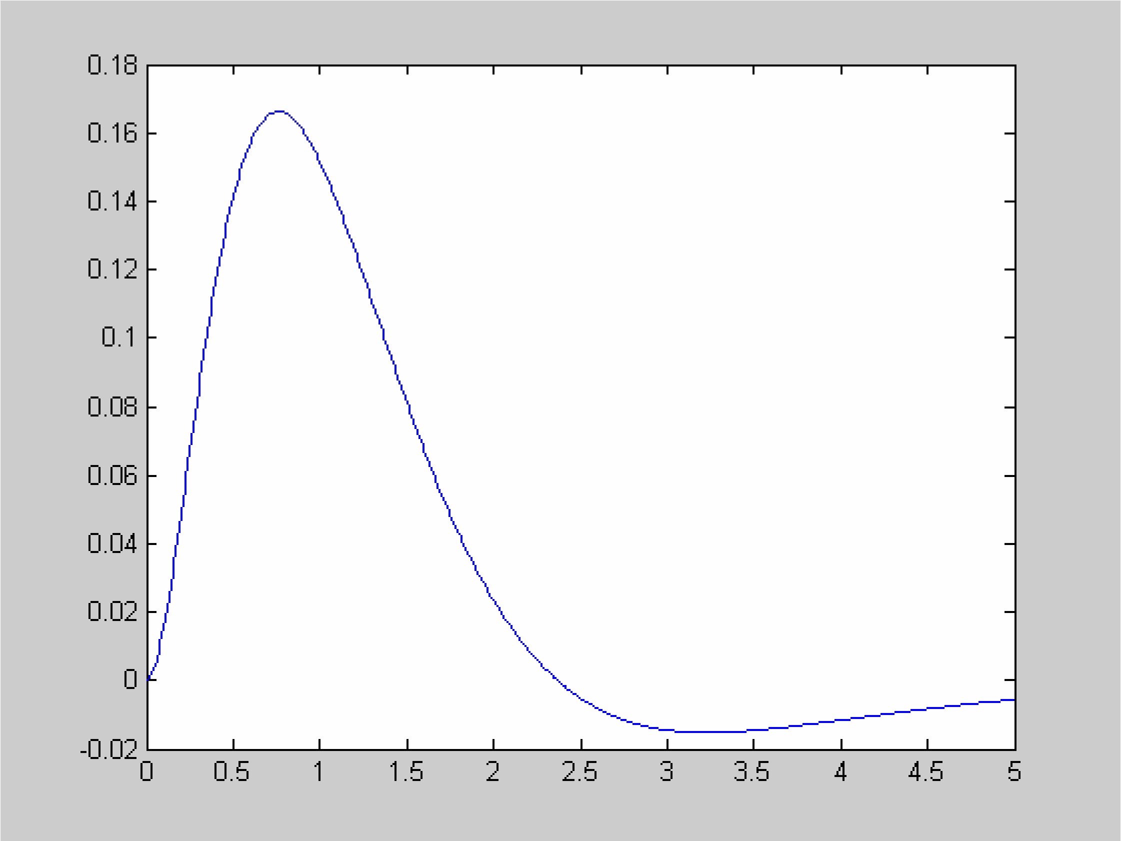

Chapter 16, Solution 66.

We obtain the response below using the following MATLAB commands.

```
t=0:0.01:5;
x=5*exp(-3*t);
num=1;
den= [1  1  4];
y=lsim(num,den,x,t);
plot(t,y)
```

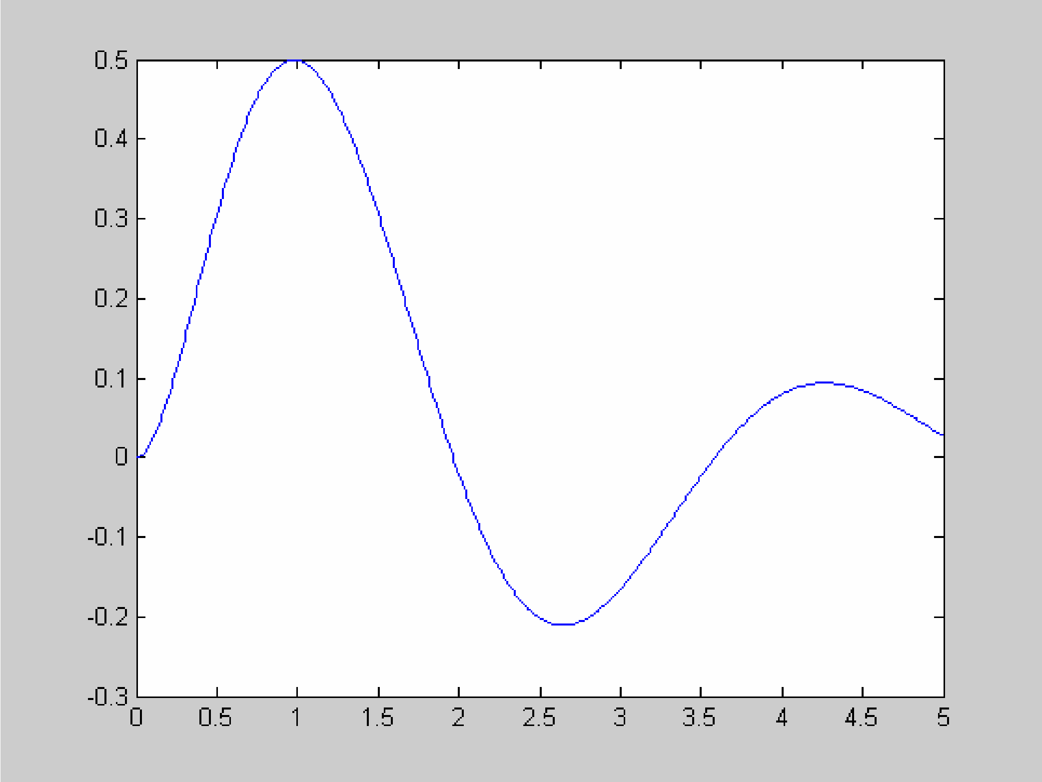

Chapter 16, Solution 67.

Using the result of Practice Problem 16.14,

$$\frac{V_o}{V_i} = \frac{-Y_1Y_2}{Y_2Y_3 + Y_4(Y_1 + Y_2 + Y_3)}$$

When $Y_1 = sC_1, \qquad C_1 = 0.5\ \mu F$

$$Y_2 = \frac{1}{R_1}, \qquad R_1 = 10\ k\Omega$$

$$Y_3 = Y_2, \qquad Y_4 = sC_2, \qquad C_2 = 1\ \mu F$$

$$\frac{V_o}{V_i} = \frac{-sC_1/R_1}{1/R_1^2 + sC_2(sC_1 + 2/R_1)} = \frac{-sC_1R_1}{1 + sC_2R_1(2 + sC_1R_1)}$$

$$\frac{V_o}{V_i} = \frac{-sC_1R_1}{s^2C_1C_2R_1^2 + s \cdot 2C_2R_1 + 1}$$

$$\frac{V_o}{V_i} = \frac{-s(0.5\times10^{-6})(10\times10^3)}{s^2(0.5\times10^{-6})(1\times10^{-6})(10\times10^3)^2 + s(2)(1\times10^{-6})(10\times10^3) + 1}$$

$$\frac{V_o}{V_i} = \frac{-100s}{s^2 + 400s + 2\times10^4}$$

Therefore,

$a = \underline{\mathbf{-100}}, \qquad b = \underline{\mathbf{400}}, \qquad c = \underline{\mathbf{2\times10^4}}$

Chapter 16, Solution 68.

(a) Let $Y(s) = \dfrac{K(s+1)}{s+3}$

$$Y(\infty) = \lim_{s\to\infty}\frac{K(s+1)}{s+3} = \lim_{s\to\infty}\frac{K(1+1/s)}{1+3/s} = K$$

i.e. $0.25 = K$.

Hence, $Y(s) = \underline{\dfrac{\mathbf{s+1}}{\mathbf{4(s+3)}}}$

(b) Consider the circuit shown below.

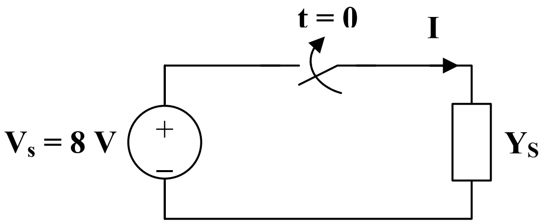

$$V_s = 8u(t) \longrightarrow V_s = 8/s$$

$$I = \frac{V_s}{Z} = Y(s)\,V_s(s) = \frac{8}{4s}\cdot\frac{s+1}{s+3} = \frac{2(s+1)}{s(s+3)}$$

$$I = \frac{A}{s} + \frac{B}{s+3}$$

$$A = 2/3, \qquad B = -4/3$$

$$i(t) = \mathbf{\frac{1}{3}\left[2 - 4e^{-3t}\right]u(t)\ A}$$

Chapter 16, Solution 69.

The gyrator is equivalent to two cascaded inverting amplifiers. Let V_1 be the voltage at the output of the first op amp.

$$V_1 = \frac{-R}{R}V_i = -V_i$$

$$V_o = \frac{-1/sC}{R}V_1 = \frac{1}{sCR}V_i$$

$$I_o = \frac{V_o}{R} = \frac{V_o}{sR^2C}$$

$$\frac{V_o}{I_o} = sR^2C$$

$$\mathbf{\frac{V_o}{I_o} = sL, \quad when\ L = R^2C}$$

Chapter 17, Solution 1.

(a) This is **periodic** with $\omega = \pi$ which leads to $T = 2\pi/\omega = \underline{\mathbf{2}}$.

(b) y(t) is **not periodic** although sin t and 4 cos 2πt are independently periodic.

(c) Since $\sin A \cos B = 0.5[\sin(A + B) + \sin(A - B)]$,

$$g(t) = \sin 3t \cos 4t = 0.5[\sin 7t + \sin(-t)] = -0.5 \sin t + 0.5 \sin 7t$$

which is harmonic or **periodic** with the fundamental frequency

$$\omega = 1 \text{ or } T = 2\pi/\omega = \underline{\mathbf{2\pi.}}$$

(d) $h(t) = \cos^2 t = 0.5(1 + \cos 2t)$. Since the sum of a periodic function and a constant is also **periodic**, h(t) is periodic. $\omega = 2$ or $T = 2\pi/\omega = \underline{\pi}$.

(e) The frequency ratio $0.6|0.4 = 1.5$ makes z(t) **periodic**.

$$\omega = 0.2\pi \text{ or } T = 2\pi/\omega = \underline{\mathbf{10}}.$$

(f) $p(t) = 10$ is **not periodic**.

(g) g(t) is **not periodic**.

Chapter 17, Solution 2.

(a) The frequency ratio is $6/5 = 1.2$. The highest common factor is 1.

$$\omega = 1 = 2\pi/T \text{ or } T = \underline{\mathbf{2\pi}}.$$

(b) $\omega = 2$ or $T = 2\pi/\omega = \underline{\pi}$.

(c) $f_3(t) = 4 \sin^2 600\pi t = (4/2)(1 - \cos 1200\pi t)$

$$\omega = 1200\pi \text{ or } T = 2\pi/\omega = 2\pi/(1200\pi) = \underline{\mathbf{1/600}}.$$

(d) $f_4(t) = e^{j10t} = \cos 10t + j\sin 10t$. $\omega = 10$ or $T = 2\pi/\omega = \underline{\mathbf{0.2\pi.}}$

Chapter 17, Solution 3.

$T = 4, \ \omega_o = 2\pi/T = \pi/2$

$$g(t) = \begin{cases} 5, & 0 < t < 1 \\ 10, & 1 < t < 2 \\ 0, & 2 < t < 4 \end{cases}$$

$$a_o = (1/T)\int_0^T g(t)dt = 0.25[\int_0^1 5dt + \int_1^2 10dt] = \underline{3.75}$$

$$a_n = (2/T)\int_0^T g(t)\cos(n\omega_o t)dt = (2/4)[\int_0^1 5\cos(\frac{n\pi}{2}t)dt + \int_1^2 10\cos(\frac{n\pi}{2}t)dt]$$

$$= 0.5[5\frac{2}{n\pi}\sin\frac{n\pi}{2}t\Big|_0^1 + 10\frac{2}{n\pi}\sin\frac{n\pi}{2}t\Big|_1^2] = (-1/(n\pi))5\sin(n\pi/2)$$

$$a_n = \begin{cases} \underline{\mathbf{(5/(n\pi))(-1)^{(n+1)/2}}}, & \mathbf{n = odd} \\ \underline{\mathbf{0}}, & \mathbf{n = even} \end{cases}$$

$$b_n = (2/T)\int_0^T g(t)\sin(n\omega_o t)dt = (2/4)[\int_0^1 5\sin(\frac{n\pi}{2}t)dt + \int_1^2 10\sin(\frac{n\pi}{2}t)dt]$$

$$= 0.5[\frac{-2x5}{n\pi}\cos\frac{n\pi}{2}t\Big|_0^1 - \frac{2x10}{n\pi}\cos\frac{n\pi}{2}t\Big|_1^2] = \underline{\mathbf{(5/(n\pi))[3 - 2\cos n\pi + \cos(n\pi/2)]}}$$

Chapter 17, Solution 4.

$f(t) = 10 - 5t, \ 0 < t < 2, \ T = 2, \ \omega_o = 2\pi/T = \pi$

$$a_o = (1/T)\int_0^T f(t)dt = (1/2)\int_0^2 (10 - 5t)dt = 0.5[10t - (5t^2/2)]\Big|_0^2 = 5$$

$$a_n = (2/T)\int_0^T f(t)\cos(n\omega_o t)dt = (2/2)\int_0^2 (10 - 5t)\cos(n\pi t)dt$$

$$= \int_0^2 (10)\cos(n\pi t)dt - \int_0^2 (5t)\cos(n\pi t)dt$$

$$= \frac{-5}{n^2\pi^2}\cos n\pi t\Big|_0^2 + \frac{5t}{n\pi}\sin n\pi t\Big|_0^2 = [-5/(n^2\pi^2)](\cos 2n\pi - 1) = 0$$

$$b_n = (2/2)\int_0^2 (10 - 5t)\sin(n\pi t)dt$$

$$= \int_0^2 (10)\sin(n\pi t)dt - \int_0^2 (5t)\sin(n\pi t)dt$$

$$= \frac{-5}{n^2\pi^2}\sin n\pi t\Big|_0^2 + \frac{5t}{n\pi}\cos n\pi t\Big|_0^2 = 0 + [10/(n\pi)](\cos 2n\pi) = 10/(n\pi)$$

Hence $\qquad f(t) = \mathbf{5 + \frac{10}{\pi}\sum_{n=1}^{\infty}\frac{1}{n}\sin(n\pi t)}$

Chapter 17, Solution 5.

$T = 2\pi, \qquad \omega = 2\pi / T = 1$

$$a_o = \frac{1}{T}\int_0^T z(t)dt = \frac{1}{2\pi}[1x\pi - 2x\pi] = -0.5$$

$$a_n = \frac{2}{T}\int_0^T z(t)\cos n\omega_o dt = \frac{1}{\pi}\int_0^\pi 1\cos ntdt - \frac{1}{\pi}\int_\pi^{2\pi} 2\cos ntdt = \frac{1}{n\pi}\sin..nt\ \Big|_0^\pi - \frac{2}{n\pi}\sin nt\ \Big|_\pi^{2\pi} = 0$$

$$b_n = \frac{2}{T}\int_0^T z(t)\cos n\omega_o dt = \frac{1}{\pi}\int_0^\pi 1\sin ntdt - \frac{1}{\pi}\int_\pi^{2\pi} 2\sin ntdt = -\frac{1}{n\pi}\cos nt\ \Big|_0^\pi + \frac{2}{n\pi}\cos nt\ \Big|_\pi^{2\pi} = \begin{cases} \frac{6}{n\pi}, n = odd \\ 0, \quad n = even \end{cases}$$

Thus,

$$z(t) = -0.5 + \sum_{\substack{n=1 \\ n=odd}}^{\infty} \frac{6}{n\pi}\sin nt$$

Chapter 17, Solution 6.

$$T = 2,\ \omega_o = \frac{2\pi}{2} = \pi$$

$$a_o = \frac{1}{2}\int_0^2 y(t)dt = \frac{1}{2}(4x1 + 2x1) = \frac{6}{2} = 3$$

Since this is an odd function, $a_n = 0$.

$$b_n = \frac{2}{2}\int_0^2 y(t)\sin(n\omega_o t)dt = \int_0^1 4\sin(n\pi t)dt + \int_1^2 2\sin(n\pi t)dt$$

$$= \frac{-4}{n\pi}\cos(n\pi t)\Big|_0^1 - \frac{2}{n\pi}\cos(n\pi t)\Big|_1^2 = \frac{-4}{n\pi}(\cos(n\pi) - 1) - \frac{2}{n\pi}(\cos(2n\pi) - \cos(n\pi))$$

$$= \frac{4}{n\pi}(1 - \cos(n\pi)) - \frac{2}{n\pi}(1 - \cos(n\pi)) = \frac{2}{n\pi}(1 - \cos(n\pi)) = \begin{cases} 0, & n = \text{even} \\ \frac{4}{n\pi}, & n = \text{odd} \end{cases}$$

$$y(t) = 3 + \frac{4}{\pi}\sum_{\substack{n=1 \\ n=\text{odd}}}^{\infty} \frac{1}{n}\sin(n\pi t)$$

Chapter 17, Solution 7.

$$T = 12, \qquad \omega = 2\pi / T = \frac{\pi}{6}, \qquad a_0 = 0$$

$$a_n = \frac{2}{T}\int_0^T f(t)\cos n\omega_o dt = \frac{1}{6}[\int_{-2}^{4} 10\cos n\pi t/6dt + \int_4^{10} (-10)\cos n\pi t/6dt]$$

$$= \frac{10}{n\pi}\sin n\pi t/6\ \Big|_{-2}^{4} - \frac{10}{n\pi}\sin n\pi t/6\ \Big|_4^{10} = \frac{10}{n\pi}\left[2\sin 2n\pi/3 + \sin n\pi/3 - \sin 5n\pi/3\right]$$

$$b_n = \frac{2}{T}\int_0^T f(t)\sin n\omega_o dt = \frac{1}{6}[\int_{-2}^{4} 10\sin n\pi t/6dt + \int_4^{10} (-10)\sin n\pi t/6dt]$$

$$= -\frac{10}{n\pi}\cos n\pi t/6 \Big|_{-2}^{4} + \frac{10}{n\pi}\cos n\pi n t/6 \Big|_{4}^{10} = \frac{10}{n\pi}\left[\cos 5n\pi/3 + \cos n\pi/3 - 2\sin 2n\pi/3\right]$$

$$f(t) = \sum_{n=1}^{\infty}\left(a_n \cos n\pi t/6 + b_n \sin n\pi t/6\right)$$

where a_n and b_n are defined above.

Chapter 17, Solution 8.

$f(t) = 2(1+t), \ -1 < t < 1, \quad T = 2, \quad \omega_o = 2\pi/T = \pi$

$$a_o = \frac{1}{T}\int_0^T f(t)dt = \frac{1}{2}\int_{-1}^{1} 2(t+1)dt = t^2 + t \Big|_{-1}^{1} = 2$$

$$a_n = \frac{2}{T}\int_0^T f(t)\cos n\omega_o dt = \frac{2}{2}\int_{-1}^{1} 2(t+1)\cos n\pi t dt = 2\left(\frac{1}{n^2\pi^2}\cos n\pi t + \frac{t}{n\pi}\sin n\pi t + \frac{1}{n\pi}\sin n\pi t\right)_{-1}^{1} = 0$$

$$b_n = \frac{2}{T}\int_0^T f(t)\sin n\omega_o dt = \frac{2}{2}\int_{-1}^{1} 2(t+1)\sin n\pi t dt = 2\left(-\frac{1}{n^2\pi^2}\sin n\pi t - \frac{t}{n\pi}\cos n\pi t - \frac{1}{n\pi}\cos n\pi t\right)_{-1}^{1} = -\frac{4}{n\pi}\cos n\pi$$

$$f(t) = 2 - \frac{4}{\pi}\sum_{n=1}^{\infty}\frac{(-1)^n}{n}\cos n\pi t$$

Chapter 17, Solution 9.

f(t) is an even function, $b_n=0$.

$T = 8, \quad \omega = 2\pi/T = \pi/4$

$$a_o = \frac{1}{T}\int_0^T f(t)dt = \frac{2}{8}\left[\int_0^2 10\cos \pi t/4 dt + 0\right] = \frac{10}{4}\left(\frac{4}{\pi}\right)\sin \pi t/4 \Big|_0^2 = \frac{10}{\pi} = 3.183$$

$$a_n = \frac{4}{T}\int_0^{T/2} f(t)\cos n\omega_o dt = \frac{40}{8}[\int_0^2 10\cos \pi t/4 \cos n\pi t/4 dt + 0] = 5\int_0^2 [\cos \pi t(n+1)/4 + \cos \pi t(n-1)/4]dt$$

For n = 1,

$$a_1 = 5\int_0^2 [\cos \pi t/2 + 1]dt = 5\left[\frac{2}{\pi}\sin \pi t/2 dt + t\right]_0^2 = 10$$

For n>1,

$$a_n = \frac{20}{\pi(n+1)}\sin\frac{\pi(n+1)t}{4} + \frac{20}{\pi(n-1)}\sin\frac{\pi(n-1)}{4}\Bigg|_0^2 = \frac{20}{\pi(n+1)}\sin\frac{\pi(n+1)}{2} + \frac{20}{\pi(n-1)}\sin\frac{\pi(n-1)}{2}$$

$$a_2 = \frac{10}{\pi}\sin\pi + \frac{20}{\pi}\sin\pi/2 = 6.3662, \qquad a_3 = \frac{20}{4\pi}\sin 2\pi + \frac{10}{\pi}\sin\pi = 0$$

Thus,

$$\underline{a_0 = 3.183, \quad a_1 = 10, \quad a_2 = 6.362, \quad a_3 = 0, \quad b_1 = 0 = b_2 = b_3}$$

Chapter 17, Solution 10.

$$T = 2, \qquad \omega_o = 2\pi/T = \pi$$

$$c_n = \frac{1}{T}\int_0^T h(t)e^{-jn\omega_o t}dt = \frac{1}{2}\left[\int_0^1 4e^{-jn\pi t}dt + \int_1^2 (-2)e^{-jn\pi t}dt\right] = \frac{1}{2}\left[\frac{4e^{-jn\pi t}}{-jn\pi}\Big|_0^1 - \frac{2e^{-jn\pi t}}{-jn\pi}\Big|_1^2\right]$$

$$c_n = \frac{j}{2n\pi}\left[4e^{-j\pi n} - 4 - 2e^{-j2n\pi} + 2e^{-jn\pi}\right] = \frac{j}{2n\pi}[6\cos n\pi - 6] = \begin{cases} -\dfrac{6j}{n\pi}, & n = \text{odd} \\ 0, & n = \text{even} \end{cases},$$

Thus,

$$\underline{f(t) = \sum_{\substack{n=-\infty \\ n=\text{odd}}}^{\infty} \left(\frac{-j6}{n\pi}\right)e^{jn\pi t}}$$

Chapter 17, Solution 11.

$$T = 4, \qquad \omega_o = 2\pi/T = \pi/2$$

$$c_n = \frac{1}{T}\int_0^T y(t)e^{-jn\omega_o t}dt = \frac{1}{4}\left[\int_{-1}^{0}(t+1)e^{-jn\pi t/2}dt + \int_0^1 (1)e^{-jn\pi t/2}dt\right]$$

$$c_n = \frac{1}{4}\left[\frac{e^{-jn\pi t/2}}{-n^2\pi^2/4}(-jn\pi t/2 - 1) - \frac{2}{jn\pi}e^{-jn\pi t/2}\Big|_{-1}^{0} - \frac{2}{jn\pi}e^{-jn\pi t/2}\Big|_0^1\right]$$

$$= \frac{1}{4}\left[\frac{4}{n^2\pi^2} - \frac{2}{jn\pi} + \frac{4}{n^2\pi^2}e^{jn\pi/2}(jn\pi/2 - 1) + \frac{2}{jn\pi}e^{jn\pi/2} - \frac{2}{jn\pi}e^{-jn\pi/2} + \frac{2}{jn\pi}\right]$$

But

$$e^{jn\pi/2} = \cos n\pi/2 + j\sin n\pi/2 = j\sin n\pi/2, \qquad e^{-jn\pi/2} = \cos n\pi/2 - j\sin n\pi/2 = -j\sin n\pi/2$$

$$c_n = \frac{1}{n^2\pi^2}\left[1 + j(jn\pi/2 - 1)\sin n\pi/2 + n\pi \sin n\pi/2\right]$$

$$\underline{y(t) = \sum_{n=-\infty}^{\infty}\frac{1}{n^2\pi^2}\left[1 + j(jn\pi/2 - 1)\sin n\pi/2 + n\pi\sin n\pi/2\right]e^{jn\pi t/2}}$$

Chapter 17, Solution 12.

A voltage source has a periodic waveform defined over its period as
$v(t) = t(2\pi - t)$ V, for all $0 < t < 2\pi$

Find the Fourier series for this voltage.

$v(t) = 2\pi t - t^2$, $0 < t < 2\pi$, $T = 2\pi$, $\omega_o = 2\pi/T = 1$

$a_o =$

$$(1/T)\int_0^T f(t)dt = \frac{1}{2\pi}\int_0^{2\pi}(2\pi t - t^2)dt = \frac{1}{2\pi}(\pi t^2 - t^3/3)\Big|_0^{2\pi} = \frac{4\pi^3}{2\pi}(1 - 2/3) = \frac{2\pi^2}{3}$$

$$a_n = \frac{2}{T}\int_0^T (2\pi t - t^2)\cos(nt)dt = \frac{1}{\pi}\left[\frac{2\pi}{n^2}\cos(nt) + \frac{2\pi t}{n}\sin(nt)\right]\Bigg|_0^{2\pi}$$

$$-\frac{1}{\pi n^3}\left[2nt\cos(nt) - 2\sin(nt) + n^2t^2\sin(nt)\right]_0^{2\pi}$$

$$= \frac{2}{n^2}(1-1) - \frac{1}{\pi n^3}4n\pi\cos(2\pi n) = \frac{-4}{n^2}$$

$$b_n = \frac{2}{T}\int_0^T (2nt - t^2)\sin(nt)dt = \frac{1}{\pi}\int (2nt - t^2)\sin(nt)dt$$

$$= \frac{2n}{\pi}\frac{1}{n^2}(\sin(nt) - nt\cos(nt))\Big|_0^{\pi} - \frac{1}{\pi n^3}(2nt\sin(nt) + 2\cos(nt) - n^2t^2\cos(nt))\Big|_0^{2\pi}$$

$$= \frac{-4\pi}{n} + \frac{4\pi}{n} = 0$$

Hence, $\quad f(t) = \underline{\boldsymbol{\frac{2\pi^2}{3} - \sum_{n=1}^{\infty}\frac{4}{n^2}\cos(nt)}}$

Chapter 17, Solution 13.

$T = 2\pi, \ \omega_o = 1$

$$a_o = (1/T)\int_0^T h(t)dt = \frac{1}{2\pi}\left[\int_0^{\pi} 10\sin t\,dt + \int_{\pi}^{2\pi} 20\sin(t - \pi)\,dt\right]$$

$$= \frac{1}{2\pi}\left[-10\cos t\Big|_0^{\pi} - 20\cos(t - \pi)\Big|_{\pi}^{2\pi}\right] = \frac{30}{\pi}$$

$$a_n = (2/T)\int_0^T h(t)\cos(n\omega_o t)dt$$

$$= [2/(2\pi)]\left[\int_0^{\pi} 10\sin t\cos(nt)dt + \int_{\pi}^{2\pi} 20\sin(t - \pi)\cos(nt)dt\right]$$

Since $\sin A\cos B = 0.5[\sin(A + B) + \sin(A - B)]$

$\sin t\cos nt = 0.5[\sin((n + 1)t) + \sin((1 - n))t]$

$\sin(t - \pi) = \sin t\cos\pi - \cos t\sin\pi = -\sin t$

$\sin(t - \pi)\cos(nt) = -\sin(t)\cos(nt)$

$$a_n = \frac{1}{2\pi}\left[10\int_0^{\pi}[\sin([1+n]t)+\sin([1-n]t)]dt - 20\int_{\pi}^{2\pi}[\sin([1+n]t)+\sin([1-n]t)]dt\right]$$

$$= \frac{5}{\pi}\left[\left(-\frac{\cos([1+n]t)}{1+n} - \frac{\cos([1-n]t)}{1-n}\right)\Bigg|_0^{\pi} + \left(\frac{2\cos([1+n]t)}{1+n} + \frac{2\cos([1-n]t)}{1-n}\right)\Bigg|_{\pi}^{2\pi}\right]$$

$$a_n = \frac{5}{\pi}\left[\frac{3}{1+n} + \frac{3}{1-n} - \frac{3\cos([1+n]\pi)}{1+n} - \frac{3\cos([1-n]\pi)}{1-n}\right]$$

But, $[1/(1+n)] + [1/(1-n)] = 1/(1-n^2)$

$\cos([n-1]\pi) = \cos([n+1]\pi) = \cos\pi\cos n\pi - \sin\pi\sin n\pi = -\cos n\pi$

$a_n = (5/\pi)[(6/(1-n^2)) + (6\cos(n\pi)/(1-n^2))]$

$= [30/(\pi(1-n^2))](1+\cos n\pi) = [-60/(\pi(n-1))]$, $n = \text{even}$
$= 0$, $n = \text{odd}$

$b_n = (2/T)\int_0^T h(t)\sin n\omega_o t\, dt$

$= [2/(2\pi)][\int_0^{\pi} 10\sin t\sin nt\, dt + \int_{\pi}^{2\pi} 20(-\sin t)\sin nt\, dt$

But, $\sin A\sin B = 0.5[\cos(A-B) - \cos(A+B)]$

$\sin t\sin nt = 0.5[\cos([1-n]t) - \cos([1+n]t)]$

$b_n = (5/\pi)\{[(\sin([1-n]t)/(1-n)) - (\sin([1+n]t)/(1+n)]\big|_0^{\pi}$

$+ [(2\sin([1-n]t)/(1-n)) - (2\sin([1+n]t)/(1+n)]\big|_{\pi}^{2\pi}\}$

$$= \frac{5}{\pi}\left[-\frac{\sin([1-n]\pi)}{1-n} + \frac{\sin([1+n]\pi)}{1+n}\right] = 0$$

Thus, $$h(t) = \frac{30}{\pi} - \frac{60}{\pi}\sum_{k=1}^{\infty}\frac{\cos(2kt)}{(4k^2-1)}$$

Chapter 17, Solution 14.

Since cos(A + B) = cos A cos B – sin A sin B.

$$f(t) = \underline{\mathbf{2+\sum_{n=1}^{\infty}\left(\frac{10}{n^3+1}\cos(n\pi/4)\cos(2nt)-\frac{10}{n^3+1}\sin(n\pi/4)\sin(2nt)\right)}}$$

Chapter 17, Solution 15.

(a) $D\cos\omega t + E\sin\omega t = A\cos(\omega t - \theta)$

where $A = \sqrt{D^2+E^2}$, $\theta = \tan^{-1}(E/D)$

$$A = \sqrt{\frac{16}{(n^2+1)^2}+\frac{1}{n^6}},\quad \theta = \tan^{-1}((n^2+1)/(4n^3))$$

$$f(t) = \underline{\mathbf{10+\sum_{n=1}^{\infty}\sqrt{\frac{16}{(n^2+1)^2}+\frac{1}{n^6}}\cos\left(10nt-\tan^{-1}\frac{n^2+1}{4n^3}\right)}}$$

(b) $D\cos\omega t + E\sin\omega t = A\sin(\omega t + \theta)$

where $A = \sqrt{D^2+E^2}$, $\theta = \tan^{-1}(D/E)$

$$f(t) = \underline{\mathbf{10+\sum_{n=1}^{\infty}\sqrt{\frac{16}{(n^2+1)^2}+\frac{1}{n^6}}\sin\left(10nt+\tan^{-1}\frac{4n^3}{n^2+1}\right)}}$$

Chapter 17, Solution 16.

If $v_2(t)$ is shifted by 1 along the vertical axis, we obtain $v_2^*(t)$ shown below, i.e. $v_2^*(t) = v_2(t) + 1$.

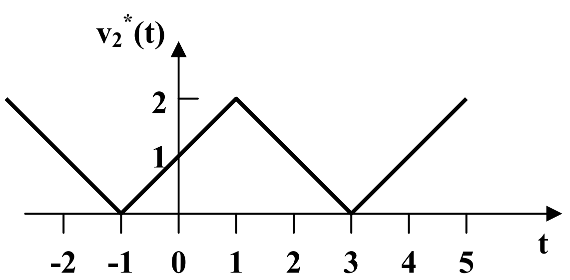

Comparing $v_2^*(t)$ with $v_1(t)$ shows that

$$v_2^*(t) = 2v_1((t + t_o)/2)$$

$$\text{where } (t + t_o)/2 = 0 \text{ at } t = -1 \text{ or } t_o = 1$$

Hence $$v_2^*(t) = 2v_1((t + 1)/2)$$

But $$v_2^*(t) = v_2(t) + 1$$

$$v_2(t) + 1 = 2v_1((t+1)/2)$$

$$v_2(t) = -1 + 2v_1((t+1)/2)$$

$$= -1 + 1 - \frac{8}{\pi^2}\left[\cos\pi\left(\frac{t+1}{2}\right) + \frac{1}{9}\cos 3\pi\left(\frac{t+1}{2}\right) + \frac{1}{25}\cos 5\pi\left(\frac{t+1}{2}\right) + \cdots\right]$$

$$v_2(t) = -\frac{8}{\pi^2}\left[\cos\left(\frac{\pi t}{2} + \frac{\pi}{2}\right) + \frac{1}{9}\cos\left(\frac{3\pi t}{2} + \frac{3\pi}{2}\right) + \frac{1}{25}\cos\left(\frac{5\pi t}{2} + \frac{5\pi}{2}\right) + \cdots\right]$$

$$\underline{v_2(t) = -\frac{8}{\pi^2}\left[\sin\left(\frac{\pi t}{2}\right) + \frac{1}{9}\sin\left(\frac{3\pi t}{2}\right) + \frac{1}{25}\sin\left(\frac{5\pi t}{2}\right) + \cdots\right]}$$

Chapter 17, Solution 17.

We replace t by –t in each case and see if the function remains unchanged.

(a) $1 - t$, **neither odd nor even.**

(b) $t^2 - 1$, **even**

(c) $\cos n\pi(-t) \sin n\pi(-t) = -\cos n\pi t \sin n\pi t$, **odd**

(d) $\sin^2 n(-t) = (-\sin \pi t)^2 = \sin^2 \pi t$, **even**

(e) e^t, **neither odd nor even**.

Chapter 17, Solution 18.

(a) $T = 2$ leads to $\omega_o = 2\pi/T = \underline{\pi}$

$f_1(-t) = -f_1(t)$, showing that $f_1(t)$ is **<u>odd and half-wave symmetric</u>**.

(b) $T = 3$ leads to $\omega_o = 2\pi/3$

$f_2(t) = f_2(-t)$, showing that $f_2(t)$ is **<u>even</u>**.

(c) $T = 4$ leads to $\omega_o = \pi/2$

$f_3(t)$ is **<u>even and half-wave symmetric</u>**.

Chapter 17, Solution 19.

This is a half-wave even symmetric function.

$$a_o = 0 = b_n, \quad \omega_o = 2\pi/T \quad \pi/2$$

$$a_n = \frac{4}{T}\int_0^{T/2}\left[1 - \frac{4t}{T}\right]\cos(n\omega_o t)dt$$

$$= [4/(n\pi)^2](1 - \cos n\pi) \quad = 8/(n^2\pi^2), \quad n = \text{odd}$$
$$= 0, \quad n = \text{even}$$

$$\underline{\mathbf{f(t) = \frac{8}{\pi^2}\sum_{n=odd}^{\infty}\frac{1}{n^2}\cos\left(\frac{n\pi t}{2}\right)}}$$

Chapter 17, Solution 20.

This is an even function.

$$b_n = 0, \; T = 6, \; \omega = 2\pi/6 = \pi/3$$

$$a_o = \frac{2}{T}\int_0^{T/2} f(t)dt = \frac{2}{6}\left[\int_1^2 (4t - 4)dt \int_2^3 4\,dt\right]$$

$$= \frac{1}{3}\left[(2t^2 - 4t)\Big|_1^2 + 4(3-2)\right] = 2$$

$$a_n = \frac{4}{T}\int_0^{T/4} f(t)\cos(n\pi t/3)dt$$

$$= (4/6)[\int_1^2 (4t-4)\cos(n\pi t/3)dt + \int_2^3 4\cos(n\pi t/3)dt]$$

$$= \frac{16}{6}\left[\frac{9}{n^2\pi^2}\cos\left(\frac{n\pi t}{3}\right) + \frac{3t}{n\pi}\sin\left(\frac{n\pi t}{3}\right) - \frac{3}{n\pi}\sin\left(\frac{n\pi t}{3}\right)\right]_1^2 + \frac{16}{6}\left[\frac{3}{n\pi}\sin\left(\frac{n\pi t}{3}\right)\right]_2^3$$

$$= [24/(n^2\pi^2)][\cos(2n\pi/3) - \cos(n\pi/3)]$$

Thus $$f(t) = \underline{\mathbf{2 + \frac{24}{\pi^2}\sum_{n=1}^{\infty}\frac{1}{n^2}\left[\cos\left(\frac{2\pi n}{3}\right) - \cos\left(\frac{\pi n}{3}\right)\right]\cos\left(\frac{n\pi t}{3}\right)}}$$

At t = 2,

$$f(2) = 2 + (24/\pi^2)[(\cos(2\pi/3) - \cos(\pi/3))\cos(2\pi/3)$$

$$+ (1/4)(\cos(4\pi/3) - \cos(2\pi/3))\cos(4\pi/3)$$

$$+ (1/9)(\cos(2\pi) - \cos(\pi))\cos(2\pi) + \text{-----}]$$

$$= 2 + 2.432(0.5 + 0 + 0.2222 + \text{-----})$$

f(2) = **3.756**

Chapter 17, Solution 21.

This is an even function.

$b_n = 0$, $T = 4$, $\omega_o = 2\pi/T = \pi/2$.

$$f(t) = \begin{cases} 2 - 2t, & 0 < t < 1 \\ 0, & 1 < t < 2 \end{cases}$$

$$a_o = \frac{2}{4}\int_0^1 2(1-t)dt = \left[t - \frac{t^2}{2}\right]_0^1 = 0.5$$

$$a_n = \frac{4}{T}\int_0^{T/2} f(t)\cos(n\omega_o t)dt = \frac{4}{4}\int_0^1 2(1-t)\cos\left(\frac{n\pi t}{2}\right)dt$$

$= [8/(\pi^2 n^2)][1 - \cos(n\pi/2)]$

$$f(t) = \mathbf{\frac{1}{2} + \sum_{n=1}^{\infty} \frac{8}{n^2\pi^2}\left[1 - \cos\left(\frac{n\pi}{2}\right)\right]\cos\left(\frac{n\pi t}{2}\right)}$$

Chapter 17, Solution 22.

Calculate the Fourier coefficients for the function in Fig. 16.54.

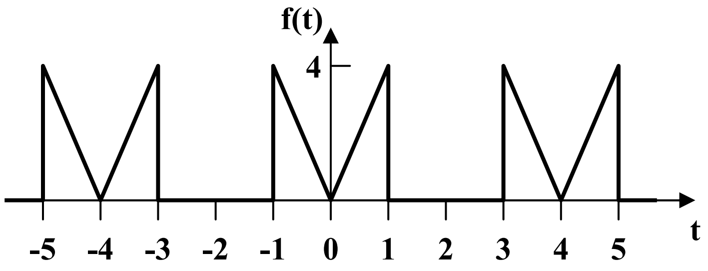

Figure 17.61 For Prob. 17.22

This is an even function, therefore $b_n = 0$. In addition, T=4 and $\omega_o = \pi/2$.

$$a_o = \frac{2}{T}\int_0^{T/2} f(t)dt = \frac{2}{4}\int_0^1 4tdt = t^2\Big|_0^1 = \underline{\mathbf{1}}$$

$$a_n = \frac{4}{T}\int_0^{T/2} f(t)\cos(\omega_o nt)dt = \frac{4}{4}\int_0^1 4t\cos(n\pi t/2)dt$$

$$= 4\left[\frac{4}{n^2\pi^2}\cos(n\pi t/2) + \frac{2t}{n\pi}\sin(n\pi t/2)\right]_0^1$$

$$a_n = \mathbf{\frac{16}{n^2\pi^2}(\cos(n\pi/2) - 1) + \frac{8}{n\pi}\sin(n\pi/2)}$$

Chapter 17, Solution 23.

f(t) is an odd function.

$f(t) = t, \ -1 < t < 1$

$a_o = 0 = a_n, \ T = 2, \ \omega_o = 2\pi/T = \pi$

$$b_n = \frac{4}{T}\int_0^{T/2} f(t)\sin(n\omega_o t)dt = \frac{4}{2}\int_0^1 t\sin(n\pi t)dt$$

$$= \frac{2}{n^2\pi^2}\left[\sin(n\pi t) - n\pi t\cos(n\pi t)\right]_0^1$$

$$= -[2/(n\pi)]\cos(n\pi) = 2(-1)^{n+1}/(n\pi)$$

$$f(t) = \underline{\mathbf{\frac{2}{\pi}\sum_{n=1}^{\infty}\frac{(-1)^{n+1}}{n}\sin(n\pi t)}}$$

Chapter 17, Solution 24.

(a) This is an odd function.

$$a_o = 0 = a_n,\ T = 2\pi,\ \omega_o = 2\pi/T = 1$$

$$b_n = \frac{4}{T}\int_0^{T/2} f(t)\sin(\omega_o nt)dt$$

$$f(t) = 1 + t/\pi, \qquad 0 < t < \pi$$

$$b_n = \frac{4}{2\pi}\int_0^{\pi}(1 + t/\pi)\sin(nt)dt$$

$$= \frac{2}{\pi}\left[-\frac{1}{n}\cos(nt) + \frac{1}{n^2\pi}\sin(nt) - \frac{t}{n\pi}\cos(nt)\right]_0^{\pi}$$

$$= [2/(n\pi)][1 - 2\cos(n\pi)] = [2/(n\pi)][1 + 2(-1)^{n+1}]$$

$a_2 = \underline{\mathbf{0}}$, $b_2 = [2/(2\pi)][1 + 2(-1)] = -1/\pi = \underline{\mathbf{-0.3183}}$

(b) $\omega n = n\omega_o = 10$ or $n = 10$

$a_{10} = 0$, $b_{10} = [2/(10\pi)][1 - \cos(10\pi)] = -1/(5\pi)$

Thus the magnitude is $A_{10} = \sqrt{a_{10}^2 + b_{10}^2} = 1/(5\pi) = \underline{\mathbf{0.06366}}$

and the phase is $\phi_{10} = \tan^{-1}(b_n/a_n) = \underline{\mathbf{-90°}}$

(c) $$f(t) = \sum_{n=1}^{\infty} \frac{2}{n\pi}[1 - 2\cos(n\pi)]\sin(nt)\,\pi$$

$$f(\pi/2) = \sum_{n=1}^{\infty} \frac{2}{n\pi}[1 - 2\cos(n\pi)]\sin(n\pi/2)\,\pi$$

For n = 1, $f_1 = (2/\pi)(1 + 2) = 6/\pi$

For n = 2, $f_2 = 0$

For n = 3, $f_3 = [2/(3\pi)][1 - 2\cos(3\pi)]\sin(3\pi/2) = -6/(3\pi)$

For n = 4, $f_4 = 0$

For n = 5, $f_5 = 6/(5\pi)$, ----

Thus, $f(\pi/2) = 6/\pi - 6/(3\pi) + 6/(5\pi) - 6/(7\pi)$ ---------

$= (6/\pi)[1 - 1/3 + 1/5 - 1/7 +$ --------$]$

$f(\pi/2) \cong$ **1.3824**

which is within 8% of the exact value of 1.5.

(d) From part (c)

$f(\pi/2) = 1.5 = (6/\pi)[1 - 1/3 + 1/5 - 1/7 +$ - - -$]$

$(3/2)(\pi/6) = [1 - 1/3 + 1/5 - 1/7 +$ - - -$]$

or $\pi/4 =$ **1 – 1/3 + 1/5 – 1/7 + - - -**

Chapter 17, Solution 25.

This is an odd function since $f(-t) = -f(t)$.

$a_o = 0 = a_n$, $T = 3$, $\omega_o = 2\pi/3$.

$$b_n = \frac{4}{T}\int_0^{T/2} f(t)\sin(n\omega_o t)dt = \frac{4}{3}\int_0^1 t\sin(2\pi nt/3)dt$$

$$= \frac{4}{3}\left[\frac{9}{4\pi^2 n^2}\sin\left(\frac{2\pi nt}{3}\right) - \frac{3t}{2n\pi}\cos\left(\frac{2\pi nt}{3}\right)\right]\Bigg|_0^1$$

$$= \frac{4}{3}\left[\frac{9}{4\pi^2 n^2}\sin\left(\frac{2\pi n}{3}\right) - \frac{3}{2n\pi}\cos\left(\frac{2\pi n}{3}\right)\right]$$

$$\mathbf{f(t) = \underline{\sum_{n=1}^{\infty}\left[\frac{3}{\pi^2 n^2}\sin\left(\frac{2\pi n}{3}\right) - \frac{2}{n\pi}\cos\left(\frac{2\pi n}{3}\right)\right]\sin\left(\frac{2\pi t}{3}\right)}}$$

Chapter 17, Solution 26.

$T = 4,\ \omega_o = 2\pi/T = \pi/2$

$$a_o = \frac{1}{T}\int_0^T f(t)dt = \frac{1}{4}\left[\int_0^1 1\,dt + \int_1^3 2\,dt + \int_3^4 1\,dt\right] = 1$$

$$a_n = \frac{2}{T}\int_0^T f(t)\cos(n\omega_o t)dt$$

$$a_n = \frac{2}{4}\left[\int_1^2 1\cos(n\pi t/2)dt + \int_2^3 2\cos(n\pi t/2)dt + \int_3^4 1\cos(n\pi t/2)dt\right]$$

$$= 2\left[\frac{2}{n\pi}\sin\frac{n\pi t}{2}\Bigg|_1^2 + \frac{4}{n\pi}\sin\frac{n\pi t}{2}\Bigg|_2^3 + \frac{2}{n\pi}\sin\frac{n\pi t}{2}\Bigg|_3^4\right]$$

$$= \frac{4}{n\pi}\left[\sin\frac{3n\pi}{2} - \sin\frac{n\pi}{2}\right]$$

$$b_n = \frac{2}{T}\int_0^T f(t)\sin(n\omega_o t)dt$$

$$= \frac{2}{4}\left[\int_1^2 1\sin\frac{n\pi t}{2}dt + \int_2^3 2\sin\frac{n\pi t}{2}dt + \int_3^4 1\sin\frac{n\pi t}{2}dt\right]$$

$$= 2\left[-\frac{2}{n\pi}\cos\frac{n\pi t}{2}\Bigg|_1^2 - \frac{4}{n\pi}\cos\frac{n\pi t}{2}\Bigg|_2^3 - \frac{2}{n\pi}\cos\frac{n\pi t}{2}\Bigg|_3^4\right]$$

$$= \frac{4}{n\pi}\left[\cos(n\pi) - 1\right]$$

Hence

f(t) =

$$\mathbf{1 + \sum_{n=1}^{\infty} \frac{4}{n\pi}\left[(\sin(3n\pi/2) - \sin(n\pi/2))\cos(n\pi t/2) + (\cos(n\pi) - 1)\sin(n\pi t/2)\right]}$$

Chapter 17, Solution 27.

(a) **odd** symmetry.

(b) $a_o = 0 = a_n$, $T = 4$, $\omega_o = 2\pi/T = \pi/2$

$$f(t) = t, \quad 0 < t < 1$$

$$= 0, \quad 1 < t < 2$$

$$b_n = \frac{4}{4}\int_0^1 t \sin\frac{n\pi t}{2}\,dt = \left[\frac{4}{n^2\pi^2}\sin\frac{n\pi t}{2} - \frac{2t}{n\pi}\cos\frac{n\pi t}{2}\right]_0^1$$

$$= \frac{4}{n^2\pi^2}\sin\frac{n\pi}{2} - \frac{2}{n\pi}\cos\frac{n\pi}{2} - 0$$

$= 4(-1)^{(n-1)/2}/(n^2\pi^2)$, n = odd

$-2(-1)^{n/2}/(n\pi)$, n = even

a_3 = **<u>0</u>**, $b_3 = 4(-1)/(9\pi^2)$ = **<u>0.045</u>**

(c) $b_1 = 4/\pi^2$, $b_2 = 1/\pi$, $b_3 = -4/(9\pi^2)$, $b_4 = -1/(2\pi)$, $b_5 = (25\pi^2)$

$$F_{rms} = \sqrt{a_o^2 + \frac{1}{2}\sum\left(a_n^2 + b_n^2\right)}$$

$$F_{rms}^2 = 0.5\Sigma b_n^2 = [1/(2\pi^2)][(16/\pi^2) + 1 + (16/(8\pi^2)) + (1/4) + (16/(625\pi^2))]$$

$$= (1/19.729)(2.6211 + 0.27 + 0.00259)$$

$F_{rms} = \sqrt{0.14659}$ = **<u>0.3829</u>**

Compare this with the exact value of $F_{rms} = \sqrt{\frac{2}{T}\int_0^1 t^2 dt} = \sqrt{1/6} = 0.4082$

Chapter 17, Solution 28.

This is half-wave symmetric since $f(t - T/2) = -f(t)$.

$$a_o = 0, \ T = 2, \ \omega_o = 2\pi/2 = \pi$$

$$a_n = \frac{4}{T}\int_0^{T/2} f(t)\cos(n\omega_o t)dt = \frac{4}{2}\int_0^1 (2-2t)\cos(n\pi t)dt$$

$$= 4\left[\frac{1}{n\pi}\sin(n\pi t) - \frac{1}{n^2\pi^2}\cos(n\pi t) - \frac{t}{n\pi}\sin(n\pi t)\right]_0^1$$

$$= [4/(n^2\pi^2)][1 - \cos(n\pi)] = \begin{cases} 8/(n^2\pi^2), & n = \text{odd} \\ 0, & n = \text{even} \end{cases}$$

$$b_n = 4\int_0^1 (1-t)\sin(n\pi t)dt$$

$$= 4\left[-\frac{1}{n\pi}\cos(n\pi t) - \frac{1}{n^2\pi^2}\sin(n\pi t) + \frac{t}{n\pi}\cos(n\pi t)\right]_0^1$$

$$= 4/(n\pi), \ n = \text{odd}$$

$$f(t) = \underline{\sum_{k=1}^{\infty}\left(\frac{8}{n^2\pi^2}\cos(n\pi t) + \frac{4}{n\pi}\sin(n\pi t)\right)}, \ \underline{n = 2k-1}$$

Chapter 17, Solution 29.

This function is half-wave symmetric.

$$T = 2\pi, \ \omega_o = 2\pi/T = 1, \ f(t) = -t, \ 0 < t < \pi$$

For odd n, $$a_n = \frac{2}{T}\int_0^{\pi}(-t)\cos(nt)dt = -\frac{2}{n^2\pi}\left[\cos(nt) + nt\sin(nt)\right]_0^{\pi} = 4/(n^2\pi)$$

$$b_n = \frac{2}{\pi}\int_0^{\pi}(-t)\sin(nt)dt = -\frac{2}{n^2\pi}\left[\sin(nt) - nt\cos(nt)\right]_0^{\pi} = -2/n$$

Thus,

$$f(t) = \underline{2\sum_{k=1}^{\infty}\left[\frac{2}{n^2\pi}\cos(nt) - \frac{1}{n}\sin(nt)\right]}, \qquad \underline{n = 2k-1}$$

Chapter 17, Solution 30.

$$c_n = \frac{1}{T}\int_{-T/2}^{T/2} f(t)e^{-jn\omega_o t}dt = \frac{1}{T}\left[\int_{-T/2}^{T/2} f(t)\cos n\omega_o t dt - j\int_{-T/2}^{T/2} f(t)\sin n\omega_o t dt\right] \qquad (1)$$

(a) The second term on the right hand side vanishes if f(t) is even. Hence

$$c_n = \frac{2}{T}\int_0^{T/2} f(t)\cos n\omega_o t dt$$

(b) The first term on the right hand side of (1) vanishes if f(t) is odd. Hence,

$$c_n = -\frac{j2}{T}\int_0^{T/2} f(t)\sin n\omega_o t dt$$

Chapter 17, Solution 31.

If $h(t) = f(\alpha t), \quad T' = T/\alpha \quad \longrightarrow \quad \omega_o' = \frac{2\pi}{T'} = \frac{2\pi}{T/\alpha} = \underline{\alpha\omega_o}$

$$a_n' = \frac{2}{T'}\int_0^{T'} h(t)\cos n\omega_o' t dt = \frac{2}{T'}\int_0^{T'} f(\alpha t)\cos n\omega_o' t dt$$

Let $\alpha t = \lambda,, \quad d t = d\lambda/\alpha, \quad \alpha T' = T$

$$a_n' = \frac{2\alpha}{T}\int_0^{T} f(\lambda)\cos n\omega_o \lambda d\lambda/\alpha = a_n$$

Similarly, $\underline{b_n' = b_n}$

Chapter 17, Solution 32.

When $i_s = 1$ (DC component)

$$i = 1/(1 + 2) = 1/3$$

For $n \geq 1$, $\omega_n = 3n$, $I_s = 1/n^2\angle 0°$

$$I = [1/(1 + 2 + j\omega_n^2)]I_s = I_s/(3 + j6n)$$

$$= \frac{\frac{1}{n^2}\angle 0°}{3\sqrt{1+4n^2}\angle \tan^{-1}(6n/3)} = \frac{1}{3n^2\sqrt{1+4n^2}}\angle -\tan(2n)$$

Thus,

$$\underline{\mathbf{i(t) = \frac{1}{3} + \sum_{n=1}^{\infty}\frac{1}{3n^2\sqrt{1+4n^2}}\cos(3n - \tan^{-1}(2n))}}$$

Chapter 17, Solution 33.

For the DC case, the inductor acts like a short, $V_o = 0$.

For the AC case, we obtain the following:

$$\frac{V_o - V_s}{10} + \frac{V_o}{j2n\pi} + \frac{jn\pi V_o}{4} = 0$$

$$\left(1 + j\left(2.5n\pi - \frac{5}{n\pi}\right)\right)V_o = V_s$$

$$V_o = \frac{V_s}{1 + j\left(2.5n\pi - \frac{5}{n\pi}\right)}$$

$$A_n\angle\Theta_n = \frac{4}{n\pi}\frac{1}{1 + j\left(2.5n\pi - \frac{5}{n\pi}\right)} = \frac{4}{n\pi + j(2.5n^2\pi^2 - 5)}$$

$$A_n = \frac{4}{\sqrt{n^2\pi^2 + (2.5n^2\pi^2 - 5)^2}};\ \Theta_n = -\tan^{-1}\left(\frac{2.5n^2\pi^2 - 5}{n\pi}\right)$$

$$v_o(t) = \sum_{n=1}^{\infty} A_n \sin(n\pi t + \Theta_n)\,V$$

Chapter 17, Solution 34.

For any n, $V = [10/n^2]\angle(n\pi/4)$, $\omega = n$.

1 H becomes $j\omega_n L = jn$ and 0.5 F becomes $1/(j\omega_n C) = -j2/n$

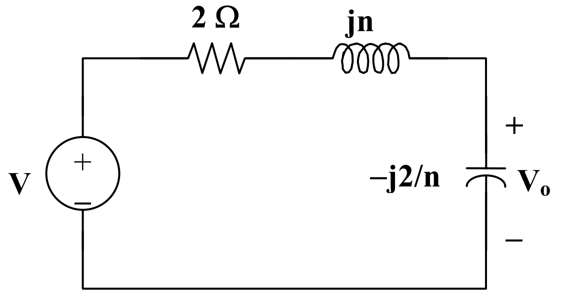

$$V_o = \{-j(2/n)/[2 + jn - j(2/n)]\}V = \{-j2/[2n + j(n^2 - 2)]\}[(10/n^2)\angle(n\pi/4)]$$

$$= \frac{20\angle((n\pi/4) - \pi/2)}{n^2\sqrt{4n^2 + (n^2-2)^2}\angle\tan^{-1}((n^2-2)/2n)}$$

$$= \frac{20}{n^2\sqrt{n^2+4}}\angle[(n\pi/4) - (\pi/2) - \tan^{-1}((n^2-2)/2n)]$$

$$v_o(t) = \sum_{n=1}^{\infty} \frac{20}{n^2\sqrt{n^2+4}} \cos\left(nt + \frac{n\pi}{4} - \frac{\pi}{2} - \tan^{-1}\frac{n^2-2}{2n}\right)$$

Chapter 17, Solution 35.

If v_s in the circuit of Fig. 17.72 is the same as function $f_2(t)$ in Fig. 17.57(b), determine the dc component and the first three nonzero harmonics of $v_o(t)$.

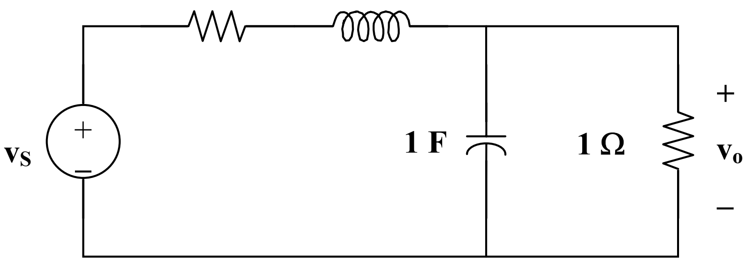

Figure 17.72 For Prob. 17.35

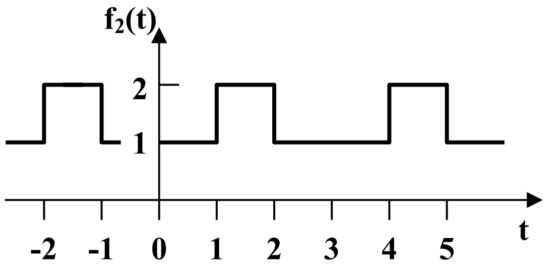

Figure 17.57(b) For Prob. 17.35

The signal is even, hence, $b_n = 0$. In addition, $T = 3$, $\omega_o = 2\pi/3$.

$$v_s(t) = 1 \text{ for all } 0 < t < 1$$
$$= 2 \text{ for all } 1 < t < 1.5$$

$$a_o = \frac{2}{3}\left[\int_0^1 1dt + \int_1^{1.5} 2dt\right] = \frac{4}{3}$$

$$a_n = \frac{4}{3}\left[\int_0^1 \cos(2n\pi t/3)dt + \int_1^{1.5} 2\cos(2n\pi t/3)dt\right]$$

$$= \frac{4}{3}\left[\frac{3}{2n\pi}\sin(2n\pi t/3)\Big|_0^1 + \frac{6}{2n\pi}\sin(2n\pi t/3)\Big|_1^{1.5}\right] = -\frac{2}{n\pi}\sin(2n\pi/3)$$

$$v_s(t) = \frac{4}{3} - \frac{2}{\pi}\sum_{n=1}^{\infty}\frac{1}{n}\sin(2n\pi/3)\cos(2n\pi t/3)$$

Now consider this circuit,

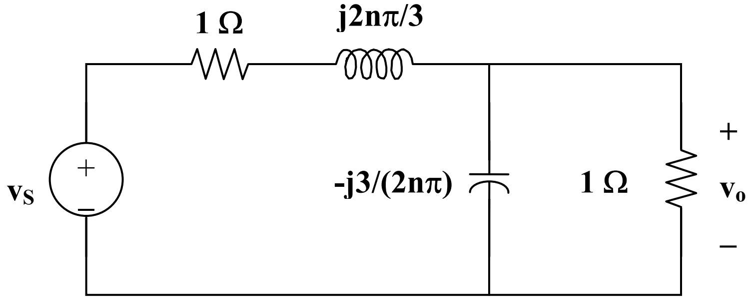

Let $Z = [-j3/(2n\pi)](1)/(1 - j3/(2n\pi)) = -j3/(2n\pi - j3)$

Therefore, $v_o = Zv_s/(Z + 1 + j2n\pi/3)$. Simplifying, we get

$$v_o = \frac{-j9v_s}{12n\pi + j(4n^2\pi^2 - 18)}$$

For the dc case, n = 0 and v_s = ¾ V and $v_o = v_s/2$ = 3/8 V.

We can now solve for $v_o(t)$

$$v_o(t) = \left[\frac{3}{8} + \sum_{n=1}^{\infty} A_n \cos\left(\frac{2n\pi t}{3} + \Theta_n\right)\right] \text{volts}$$

$$\text{where } A_n = \frac{\frac{6}{n\pi}\sin(2n\pi/3)}{\sqrt{16n^2\pi^2 + \left(\frac{4n^2\pi^2}{3} - 6\right)^2}} \text{ and } \Theta_n = 90^\circ - \tan^{-1}\left(\frac{n\pi}{3} - \frac{3}{2n\pi}\right)$$

where we can further simplify A_n to this, $A_n = \dfrac{9\sin(2n\pi/3)}{n\pi\sqrt{4n^4\pi^4 + 81}}$

Chapter 17, Solution 36.

$$v_s(t) = \sum_{\substack{n=1 \\ n=\text{odd}}}^{\infty} A_n \cos(nt - \theta_n)$$

where $\theta_n = \tan^{-1}[(3/(n\pi))/(-1/(n\pi))] = \tan^{-1}(-3) = 100.5°$

$$A_n = \sqrt{\frac{9}{n^2\pi^2} + \frac{1}{n^2\pi^2}\sin^2\frac{\pi n}{2}} = \frac{1}{n\pi}\sqrt{9 + \sin^2\frac{n\pi}{2}}$$

$\omega_n = n$ and 2 H becomes $j\omega_n L = j2n$

Let $Z = 1||j2n = j2n/(1 + j2n)$

If V_o is the voltage at the non-reference node or across the 2-H inductor.

$$V_o = ZV_s/(1 + Z) = [j2n/(1 + j2n)]V_s/\{1 + [j2n/(1 + j2n)]\}$$

$$= j2nV_s/(1 + j4n)$$

But $V_s = A_n\angle{-\theta_n}$

$$V_o = j2n\, A_n\angle{-\theta_n}/(1 + j4n)$$

$$I_o = V_o/j = [2n\,A_n\angle{-\theta_n}]/\sqrt{1+16n^2}\,\angle\tan^{-1}4n$$

$$= \frac{\frac{1}{n\pi}\left(\sqrt{9+\sin^2\frac{n\pi}{2}}\right)2n}{\sqrt{1+16n^2}}\angle{-100.5^\circ} - \tan^{-1}4n$$

Since $\sin(n\pi/2) = (-1)^{(n-1)/2}$ for n = odd, $\sin^2(n\pi/2) = 1$

$$I_o = \frac{\frac{2\sqrt{10}}{\pi}\angle -100.5^\circ - \tan^{-1}4n}{\sqrt{1+16n^2}}$$

$$\underline{\mathbf{i_o(t) = \frac{2\sqrt{10}}{\pi}\sum_{\substack{n=1\\ n=odd}}^{\infty}\frac{1}{\sqrt{1+16n^2}}\cos(nt - 100.5^\circ - \tan^{-1}4n)}}$$

Chapter 17, Solution 37.

From Example 15.1,

$$v_s(t) = 5 + \frac{20}{\pi}\sum_{k=1}^{\infty}\frac{1}{n}\sin(n\pi t), \qquad n = 2k-1$$

For the DC component, the capacitor acts like an open circuit.

$$V_o = 5$$

For the nth harmonic,

$$V_s = [20/(n\pi)]\angle 0^\circ$$

10 mF becomes $1/(j\omega_n C) = -j/(n\pi x10x10^{-3}) = -j100/(n\pi)$

$$v_o = \frac{-j\frac{100}{n\pi}V_s}{-j\frac{100}{n\pi}+20} = \frac{-j100}{20n\pi - j100}\,\frac{20}{n\pi} = \frac{100\angle -90^\circ + \tan^{-1}\frac{5}{n\pi}}{n\pi\sqrt{25+n^2\pi^2}}$$

$$\underline{\mathbf{v_o(t) = \frac{100}{\pi}\sum\frac{1}{n\sqrt{25+n^2\pi^2}}\sin(n\pi t - 90^\circ + \tan^{-1}\frac{5}{n\pi})}}$$

Chapter 17, Solution 38.

$$v_s(t) = \frac{1}{2} + \frac{2}{\pi}\sum_{k=1}^{\infty}\frac{1}{n}\sin n\pi t, \qquad n = 2k+1$$

$$V_o = \frac{j\omega_n}{1+j\omega_n}V_s, \qquad \omega_n = n\pi$$

For dc, $\omega_n = 0, \quad V_s = 0.5, \quad V_o = 0$

For nth harmonic, $V_s = \frac{2}{n\pi}\angle -90^o$

$$V_o = \frac{n\pi\angle 90^o}{\sqrt{1+n^2\pi^2}\angle\tan^{-1}n\pi}\bullet\frac{2}{n\pi}\angle 90^o = \frac{2\angle -\tan^{-1}n\pi}{\sqrt{1+n^2\pi^2}}$$

$$\underline{v_o(t) = \sum_{k=1}^{\infty}\frac{2}{\sqrt{1+n^2\pi^2}}\cos(n\pi t - \tan^{-1}n\pi), \qquad n = 2k-1}$$

Chapter 17, Solution 39.

Comparing $v_s(t)$ with f(t) in Figure 15.1, v_s is shifted by 2.5 and the magnitude is 5 times that of f(t).
Hence

$$v_s(t) = 5 + \frac{10}{\pi}\sum_{k=1}^{\infty}\frac{1}{n}\sin(n\pi t), \qquad n = 2k-1$$

$$T = 2, \; \omega_o = 2\pi//T = \pi, \; \omega_n = n\omega_o = n\pi$$

For the DC component, $i_o = 5/(20+40) = 1/12$
For the kth harmonic, $V_s = (10/(n\pi))\angle 0°$

100 mH becomes $j\omega_n L = jn\pi x0.1 = j0.1n\pi$
50 mF becomes $1/(j\omega_n C) = -j20/(n\pi)$

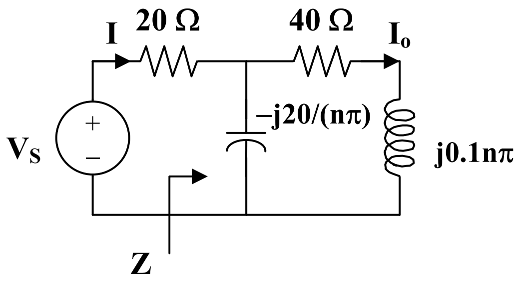

$$\text{Let } Z = -j20/(n\pi)||(40 + j0.1n\pi) = \frac{-\dfrac{j20}{n\pi}(40 + j0.1n\pi)}{-\dfrac{j20}{n\pi} + 40 + j0.1n\pi}$$

$$= \frac{-j20(40 + j0.1n\pi}{-j20 + 40n\pi + j0.1n^2\pi^2} = \frac{2n\pi - j800}{40n\pi + j(0.1n^2\pi^2 - 20)}$$

$$Z_{in} = 20 + Z = \frac{802n\pi + j(2n^2\pi^2 - 1200)}{40n\pi + j(0.1n^2\pi^2 - 20)}$$

$$I = \frac{V_s}{Z_{in}} = \frac{400n\pi + j(n^2\pi^2 - 200)}{n\pi[802n\pi + j(2n^2\pi^2 - 1200)]}$$

$$I_o = \frac{-\dfrac{j20}{n\pi}I}{-\dfrac{j20}{n\pi} + (40 + j0.1n\pi)} = \frac{-j20I}{40n\pi + j(0.1n^2\pi^2 - 20)}$$

$$= \frac{-j200}{n\pi[802n\pi + j(2n^2\pi^2 - 1200)]}$$

$$= \frac{200\angle -90° - \tan^{-1}\{(2n^2\pi^2 - 1200)/(802n\pi)\}}{n\pi\sqrt{(802)^2 + (2n^2\pi^2 - 1200)^2}}$$

Thus

$$\underline{\mathbf{i_o(t) = \frac{1}{20} + \frac{200}{\pi}\sum_{k=1}^{\infty} I_n \sin(n\pi t - \theta_n)}}, \qquad \underline{\mathbf{n = 2k - 1}}$$

where $$\theta_n = 90° + \tan^{-1}\frac{2n^2\pi^2 - 1200}{802n\pi}$$

$$I_n = \frac{1}{n\sqrt{(804n\pi)^2 + (2n^2\pi^2 - 1200)}}$$

Chapter 17, Solution 40.

$T = 2,\ \omega_o = 2\pi/T = \pi$

$$a_o = \frac{1}{T}\int_0^T v(t)dt = \frac{1}{2}\int_0^1 (2 - 2t)dt = \left[t - \frac{t^2}{2}\right]_0^1 = 1/2$$

$$a_n = \frac{2}{T}\int_0^T v(t)\cos(n\pi t)dt = \int_0^1 2(1 - t)\cos(n\pi t)dt$$

$$= 2\left[\frac{1}{n\pi}\sin(n\pi t) - \frac{1}{n^2\pi^2}\cos(n\pi t) - \frac{t}{n\pi}\sin(n\pi t)\right]_0^1$$

$$= \frac{2}{n^2\pi^2}(1 - \cos n\pi) = \begin{vmatrix} 0, & n = \text{even} \\ \dfrac{4}{n^2\pi^2}, & n = \text{odd} \end{vmatrix} = \frac{4}{\pi^2(2n-1)^2}$$

$$b_n = \frac{2}{T}\int_0^T v(t)\sin(n\pi t)dt = 2\int_0^1 (1 - t)\sin(n\pi t)dt$$

$$= 2\left[-\frac{1}{n\pi}\cos(n\pi t) - \frac{1}{n^2\pi^2}\sin(n\pi t) + \frac{t}{n\pi}\cos(n\pi t)\right]_0^1 = \frac{2}{n\pi}$$

$$v_s(t) = \frac{1}{2} + \sum A_n \cos(n\pi t - \varphi_n)$$

where $\phi_n = \tan^{-1}\dfrac{\pi(2n-1)^2}{2n}$, $A_n = \sqrt{\dfrac{4}{n^2\pi^2} + \dfrac{16}{\pi^4(2n-1)^4}}$

For the DC component, $v_s = 1/2$. As shown in Figure (a), the capacitor acts like an open circuit.

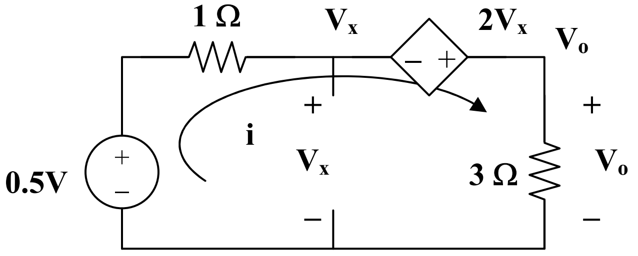

(a)

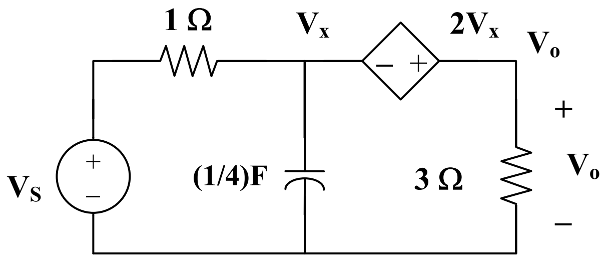

(b)

Applying KVL to the circuit in Figure (a) gives

$$-0.5 - 2V_x + 4i = 0 \qquad (1)$$

But $$-0.5 + i + V_x = 0 \text{ or } -1 + 2V_x + 2i = 0 \qquad (2)$$

Adding (1) and (2), $-1.5 + 6i = 0$ or $i = 0.25$

$$V_o = 3i = 0.75$$

For the nth harmonic, we consider the circuit in Figure (b).

$$\omega_n = n\pi, \; V_s = A_n\angle{-\phi}, \; 1/(j\omega_n C) = -j4/(n\pi)$$

At the supernode,

$$(V_s - V_x)/1 = -[n\pi/(j4)]V_x + V_o/3$$

$$V_s = [1 + jn\pi/4]V_x + V_o/3 \qquad (3)$$

But $-V_x - 2V_x + V_o = 0$ or $V_o = 3V_x$

Substituting this into (3),

$$V_s = [1 + jn\pi/4]V_x + V_x = [2 + jn\pi/4]V_x$$

$$= (1/3)[2 + jn\pi/4]V_o = (1/12)[8 + jn\pi]V_o$$

$$V_o = 12V_s/(8 + jn\pi) = \frac{12A_n\angle -\phi}{\sqrt{64 + n^2\pi^2}\angle \tan^{-1}(n\pi/8)}$$

$$V_o = \frac{12}{\sqrt{64 + n^2\pi^2}}\sqrt{\frac{4}{n^2\pi^2} + \frac{16}{\pi^4(2n-1)^4}}\angle[\tan^{-1}(n\pi/8) - \tan^{-1}(\pi(2n-1)/(2n))]$$

Thus

$$v_o(t) = \underline{\frac{3}{4} + \sum_{n=1}^{\infty} V_n \cos(n\pi t + \theta_n)}$$

where $$V_n = \underline{\frac{12}{\sqrt{64 + n^2\pi^2}}\sqrt{\frac{4}{n^2\pi^2} + \frac{16}{\pi^4(2n-1)^4}}}$$

$$\theta_n = \underline{\tan^{-1}(n\pi/8) - \tan^{-1}(\pi(2n-1)/(2n))}$$

Chapter 17, Solution 41.

For the full wave rectifier,

$T = \pi,\ \omega_o = 2\pi/T = 2,\ \omega_n = n\omega_o = 2n$

Hence

$$v_{in}(t) = \frac{2}{\pi} - \frac{4}{\pi}\sum_{n=1}^{\infty}\frac{1}{4n^2 - 1}\cos(2nt)$$

For the DC component,

$V_{in} = 2/\pi$

The inductor acts like a short-circuit, while the capacitor acts like an open circuit.

$V_o = V_{in} = 2/\pi$

For the nth harmonic,

$V_{in} = [-4/(\pi(4n^2 - 1))]\angle 0°$

2 H becomes $j\omega_n L = j4n$

0.1 F becomes $1/(j\omega_n C) = -j5/n$

$Z = 10||(-j5/n) = -j10/(2n - j)$

$V_o = [Z/(Z + j4n)]V_{in} = -j10V_{in}/(4 + j(8n - 10))$

$$= -\frac{j10}{4 + j(8n - 10)}\left(-\frac{4\angle 0°}{\pi(4n^2 - 1)}\right)$$

$$= \frac{40\angle\{90° - \tan^{-1}(2n - 2.5)\}}{\pi(4n^2 - 1)\sqrt{16 + (8n - 10)^2}}$$

Hence $$v_o(t) = \underline{\mathbf{\frac{2}{\pi} + \sum_{n=1}^{\infty} A_n \cos(2nt + \theta_n)}}$$

where

$$A_n = \underline{\mathbf{\frac{20}{\pi(4n^2 - 1)\sqrt{16n^2 - 40n + 29}}}}$$

$$\theta_n = \underline{\mathbf{90° - \tan^{-1}(2n - 2.5)}}$$

Chapter 17, Solution 42.

$$v_s = 5 + \frac{20}{\pi}\sum_{k=1}^{\infty}\frac{1}{n}\sin n\pi t, \ \ n = 2k - 1$$

$$\frac{V_s - 0}{R} = j\omega_n C(0 - V_o) \quad \longrightarrow \quad V_o = \frac{j}{\omega_n RC}V_s, \ \ \omega_n = n\omega_o = n\pi$$

For n = 0 (dc component), V_o=0.
For the nth harmonic,

$$V_o = \frac{1\angle 90^o}{n\pi RC}\frac{20}{n\pi}\angle -90^o = \frac{20}{n^2\pi^2 x10^4 x40x10^{-9}} = \frac{10^5}{2n^2\pi^2}$$

Hence,

$$v_o(t) = \underline{\frac{10^5}{2\pi^2}\sum_{k=1}^{\infty}\frac{1}{n^2}\cos n\pi t, \ \ n = 2k - 1}$$

Alternatively, we notice that this is an integrator so that

$$v_o(t) = -\frac{1}{RC}\int v_s dt = \underline{\frac{10^5}{2\pi^2}\sum_{k=1}^{\infty}\frac{1}{n^2}\cos n\pi t, \ \ n = 2k - 1}$$

Chapter 17, Solution 43.

(a) $$V_{rms} = \sqrt{a_0^2 + \frac{1}{2}\sum_{n=1}^{\infty}(a_n^2 + b_n^2)} = \sqrt{30^2 + \frac{1}{2}(20^2 + 10^2)} = \underline{\mathbf{33.91\ V}}$$

(b) $$I_{rms} = \sqrt{6^2 + \frac{1}{2}(4^2 + 2^2)} = \underline{\mathbf{6.782\ A}}$$

(c) $$P = V_{dc}I_{dc} + \frac{1}{2}\sum V_n I_n \cos(\Theta_n - \Phi_n)$$

$$= 30x6 + 0.5[20x4\cos(45^o\text{-}10^o) - 10x2\cos(\text{-}45^o\text{+}60^o)]$$

$$= 180 + 32.76 - 9.659 = \underline{\mathbf{203.1\ W}}$$

Chapter 17, Solution 44.

(a) $$p = vi = \frac{1}{2}\left[60\cos 25^o + 10\cos 45^o + 0\right] = 27.19 + 3.535 + 0 = \underline{30.73\,\text{W}}$$

(b) The power spectrum is shown below.

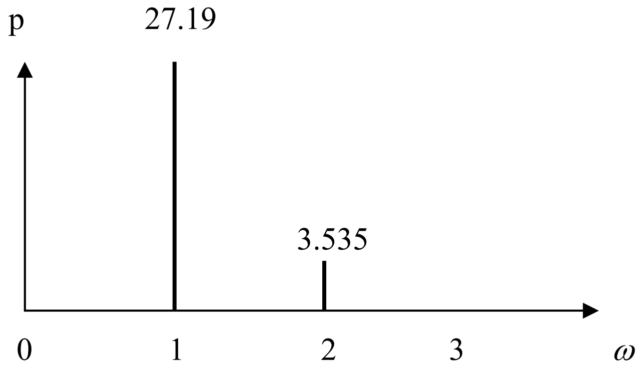

Chapter 17, Solution 45.

$\omega_n = 1000n$

$$j\omega_n L = j1000nx2x10^{-3} = j2n$$

$$1/(j\omega_n C) = -j/(1000nx40x10^{-6}) = -j25/n$$

$Z = R + j\omega_n L + 1/(j\omega_n C) = 10 + j2n - j25/n$

$I = V/Z$

For $n = 1$, $V_1 = 100$, $Z = 10 + j2 - j25 = 10 - j23$

$I_1 = 100/(10 - j23) = 3.987\angle 73.89°$

For $n = 2$, $V_2 = 50$, $Z = 10 + j4 - j12.5 = 10 - j8.5$

$I_2 = 50/(10 - j8.5) = 3.81\angle 40.36°$

For $n = 3$, $V_3 = 25$, $Z = 10 + j6 - j25/3 = 10 - j2.333$

$I_3 = 25/(10 - j2.333) = 2.435\angle 13.13°$

$I_{rms} = 0.5\sqrt{3.987^2 + 3.81^2 + 2.435^2} = \underline{\mathbf{3.014\ A}}$

$$p = V_{DC}I_{DC} + \frac{1}{2}\sum_{n=1}^{3} V_n I_n \cos(\theta_n - \phi_n)$$

$$= 0 + 0.5[100x3.987\cos(73.89°) + 50x3.81\cos(40.36°) + 25x2.435\cos(13.13°)]$$

$= 0.5[110.632 + 145.16 + 59.28] = \underline{\mathbf{157.54\ watts}}$

Chapter 17, Solution 46.

(a) This is an even function

$$I_{rms} = \sqrt{\frac{1}{T}\int_0^T f^2(t)dt} = \sqrt{\frac{2}{T}\int_0^{T/2} f^2(t)dt}$$

$$f(t) = \begin{cases} 2 - 2t, & 0 < t < 1 \\ 0, & 1 < t < 2 \end{cases}$$

$T = 4$, $\omega_o = 2\pi/T = \pi/2$

$$I_{rms}^2 = \frac{2}{4}\int_0^1 4(1-t)^2 dt = 2(t - t^2 + t^3/3)\Big|_0^1$$

$= 2(1 – 1 + 1/3) = 2/3$ or

$I_{rms} = \underline{\mathbf{0.8165\ A}}$

(b) From Problem 16.14,

$a_n = [8/(n^2\pi^2)][1 – \cos(n\pi/2)]$, $a_o = 0.5$

$a_1 = 8/\pi^2$, $a_2 = 4/\pi^2$, $a_3 = 8/(9\pi^2)$, $a_4 = 0$, $a_5 = 9/(25\pi^2)$, $a_6 = 4/(9\pi^2)$

$$I_{rms} = \sqrt{a_o + \frac{1}{2}\sum_{n=1}^{\infty} A_n^2} \cong \sqrt{\frac{1}{4} + \frac{1}{2\pi^4}\left(64 + 16 + \frac{64}{81} + \frac{64}{625} + \frac{16}{81}\right)} = \sqrt{0.66623}$$

$I_{rms} = \underline{\mathbf{0.8162\ A}}$

Chapter 17, Solution 47.

Let $I = I_{DC} + I_1 + I_2$

For the DC component

$I_{DC} = [5/(5 + 10)](3) = 1$ A

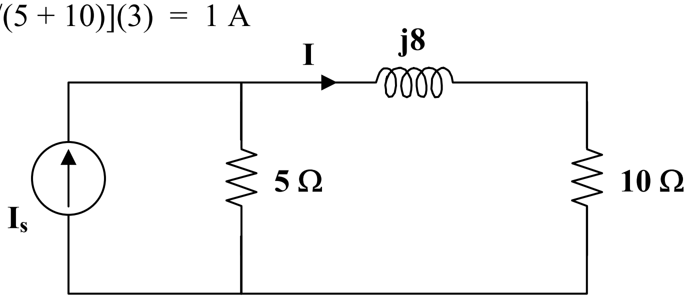

For AC, $\omega = 100$

$$j\omega L = j100x80x10^{-3} = j8$$

$$I_n = 5I_s/(5 + 10 + j8)$$

For $I_s = 0.5\angle–60°$

$$I_1 = 10\angle–60°/(15 + j8) \text{ or } |I_1| = 10/\sqrt{15^2 + 8^2}$$

For $I_s = 0.5\angle–120°$

$$I_2 = 2.5\angle–120°/(15 + j8) \text{ or } |I_2| = 2.5/\sqrt{15^2 + 8^2}$$

$p_{10} = (I_{DC}^2 + |I_1|^2/2 + |I_2|^2/2)10 = (1 + [100/(2x289)] + [6.25/(2x289)])x10$

$p_{10} = \underline{\mathbf{11.838\ watts}}$

Chapter 17, Solution 48.

(a) For the DC component, i(t) = 20 mA. The capacitor acts like an open circuit so that

$$v = Ri(t) = 2x10^3 x20x10^{-3} = 40$$

For the AC component,

$$\omega_n = 10n, \quad n = 1,2$$

$$1/(j\omega_n C) = -j/(10nx100x10^{-6}) = (-j/n)\ k\Omega$$

$$Z = 2||(-j/n) = 2(-j/n)/(2 - j/n) = -j2/(2n - j)$$

$$V = ZI = [-j2/(2n - j)]I$$

For n = 1, $V_1 = [-j2/(2 - j)]16\angle 45° = 14.311\angle -18.43°$ mV

For n = 2, $V_2 = [-j2/(4 - j)]12\angle -60° = 5.821\angle -135.96°$ mV

v(t) = **40 + 0.014311cos(10t – 18.43°) + 0.005821cos(20t – 135.96°) V**

(b)

$$p = V_{DC}I_{DC} + \frac{1}{2}\sum_{n=1}^{\infty} V_n I_n \cos(\theta_n - \phi_n)$$

$$= 20x40 + 0.5x10x0.014311\cos(45° + 18.43°)$$
$$+0.5x12x0.005821\cos(-60° + 135.96°)$$

= **800.1 mW**

Chapter 17, Solution 49.

(a)

$$Z^2{}_{rms} = \frac{1}{T}\int_0^T z^2(t)dt = \frac{1}{2\pi}\left[\int_0^{\pi} 1dt + \int_{\pi}^{2\pi} 4dt\right] = \frac{1}{2\pi}(5\pi) = 2.5$$

$$\underline{Z_{rms} = 1.581}$$

(b)

$$Z^2{}_{rms} = a^2{}_o + \frac{1}{2}\sum_{n=1}^{\infty}(a^2{}_n + b^2{}_n) = \frac{1}{4} + \frac{1}{2}\sum_{n=1}^{\infty}\frac{36}{n^2\pi^2} = \frac{1}{4} + \frac{1}{18\pi^2}\left(1 + \frac{1}{4} + \frac{1}{9} + \frac{1}{16} + \frac{1}{25} + ...\right) = 2.9193$$

$$\underline{Z_{rms} = 1.7086}$$

(c)

$$\%error = \left(\frac{1.7086}{1.581} - 1\right)x100 = \underline{8.071}$$

Chapter 17, Solution 50.

$$c_n = \frac{1}{T}\int_0^T f(t)e^{-j\omega_o nt}dt, \quad \omega_o = \frac{2n}{1} = \pi$$

$$= \frac{1}{2}\int_{-}^{1} te^{-jn\pi t}dt$$

Using integration by parts,

$u = t$ and $du = dt$

$dv = e^{-jn\pi t}dt$ which leads to $v = -[1/(2jn\pi)]e^{-jn\pi t}$

$$c_n = -\frac{t}{2jn\pi}e^{-jn\pi t}\Big|_{-1}^{1} + \frac{1}{2jn\pi}\int_{-1}^{1} e^{-jn\pi t}dt$$

$$= \frac{j}{n\pi}\left[e^{-jn\pi} + e^{jn\pi}\right] + \frac{1}{2n^2\pi^2(-j)^2}e^{-jn\pi t}\Big|_{-1}^{1}$$

$$= [j/(n\pi)]\cos(n\pi) + [1/(2n^2\pi^2)](e^{-jn\pi} - e^{jn\pi})$$

$$c_n = \frac{j(-1)^n}{n\pi} + \frac{2j}{2n^2\pi^2}\sin(n\pi) = \frac{j(-1)^n}{n\pi}$$

Thus

$$f(t) = \sum_{n=-\infty}^{\infty} c_n e^{jn\omega_o t} = \underline{\sum_{n=-\infty}^{\infty} (-1)^n \frac{j}{n\pi} e^{jn\pi t}}$$

Chapter 17, Solution 51.

$T = 2, \quad \omega_o = 2\pi/T = \pi$

$$c_n = \frac{1}{T}\int_0^T f(t)e^{-jn\omega_o t}dt = \frac{1}{2}\int_0^2 t^2 e^{-jn\pi t}dt = \frac{1}{2}\frac{e^{-jn\pi t}}{(-jn\pi)^3}\left(-n^2\pi^2t^2 + 2jn\pi t + 2\right)\Big|_0^2$$

$$c_n = \frac{1}{j2n^3\pi^3}(-4n^2\pi^2 + j4n\pi) = \frac{2}{n^2\pi^2}(1 + jn\pi)$$

$$f(t) = \underline{\sum_{n=-\infty}^{\infty} \frac{2}{n^2\pi^2}(1 + jn\pi)e^{jn\pi t}}$$

Chapter 17, Solution 52.

$$c_n = \frac{1}{T}\int_0^T f(t)e^{-j\omega_o nt}dt, \quad \omega_o = \frac{2n}{1} = \pi$$

$$= \frac{1}{2}\int_{-}^{1} te^{-jn\pi t}dt$$

Using integration by parts,

$u = t$ and $du = dt$

$dv = e^{-jn\pi t}dt$ which leads to $v = -[1/(2jn\pi)]e^{-jn\pi t}$

$$c_n = -\frac{t}{2jn\pi}e^{-jn\pi t}\Big|_{-1}^{1} + \frac{1}{2jn\pi}\int_{-1}^{1} e^{-jn\pi t}dt$$

$$= \frac{j}{n\pi}\left[e^{-jn\pi} + e^{jn\pi t}\right] + \frac{1}{2n^2\pi^2(-j)^2}e^{-jn\pi t}\Big|_{-1}^{1}$$

$$= [j/(n\pi)]\cos(n\pi) + [1/(2n^2\pi^2)](e^{-jn\pi} - e^{jn\pi})$$

$$c_n = \frac{j(-1)^n}{n\pi} + \frac{2j}{2n^2\pi^2}\sin(n\pi) = \frac{j(-1)^n}{n\pi}$$

Thus

$$f(t) = \sum_{n=-\infty}^{\infty} c_n e^{jn\omega_o t} = \underline{\boldsymbol{\sum_{n=-\infty}^{\infty}(-1)^n \frac{j}{n\pi}e^{jn\pi t}}}$$

Chapter 17, Solution 53.

$$\omega_o = 2\pi/T = 2\pi$$

$$c_n = \int_0^T e^{-t}e^{-jn\omega_o t}dt = \int_0^1 e^{-(1+jn\omega_o)t}dt$$

$$= \frac{-1}{1 + j2\pi n}e^{-(1+j2n\pi)t}\Big|_0^1 = \frac{-1}{1 + j2n\pi}\left[e^{-(1+j2n\pi)} - 1\right]$$

$$= [1/(j2n\pi)][1 - e^{-1}(\cos(2\pi n) - j\sin(2n\pi))]$$

$$= (1 - e^{-1})/(1 + j2n\pi) = 0.6321/(1 + j2n\pi$$

$$f(t) = \underline{\boldsymbol{\sum_{n=-\infty}^{\infty}\frac{0.6321e^{j2n\pi t}}{1 + j2n\pi}}}$$

Chapter 17, Solution 54.

$T = 4, \ \omega_o = 2\pi/T = \pi/2$

$$c_n = \frac{1}{T}\int_0^T f(t)e^{-j\omega_o nt}dt$$

$$= \frac{1}{4}\left[\int_0^1 2e^{-jn\pi t/2}dt + \int_1^2 1e^{-jn\pi t/2}dt - \int_2^4 1e^{-jn\pi t/2}dt\right]$$

$$= \frac{j}{2n\pi}\left[2e^{-jn\pi/2} - 2 + e^{-jn\pi} - e^{-jn\pi/2} - e^{-j2n\pi} + e^{-jn\pi}\right]$$

$$= \frac{j}{2n\pi}\left[3e^{-jn\pi/2} - 3 + 2e^{-jn\pi}\right]$$

$$f(t) = \sum_{n=-\infty}^{\infty} c_n e^{jn\omega_o t}$$

Chapter 17, Solution 55.

$T = 2\pi, \ \omega_o = 2\pi/T = 1$

$$c_n = \frac{1}{T}\int_0^T i(t)e^{-jn\omega_o t}dt$$

But $$i(t) = \begin{vmatrix} \sin(t), & 0 < t < \pi \\ 0, & \pi < t < 2\pi \end{vmatrix}$$

$$c_n = \frac{1}{2\pi}\int_0^\pi \sin(t)e^{-jn\pi t}dt = \frac{1}{2\pi}\int_0^\pi \frac{1}{2j}(e^{jt} - e^{-jt})e^{-jnt}dt$$

$$= \frac{1}{4\pi j}\left[\frac{e^{jt(1-n)}}{j(1-n)} + \frac{e^{-jt(1+n)}}{j(1+n)}\right]_0^\pi$$

$$= -\frac{1}{4}\left[\frac{e^{j\pi(1-n)} - 1}{1-n} + \frac{e^{-j\pi(n+1)} - 1}{1+n}\right]$$

$$= \frac{1}{4\pi(n^2-1)}\left[e^{j\pi(1-n)} - 1 + ne^{j\pi(1-n)} - n + e^{-j\pi(1+n)} - 1 - ne^{-j\pi(1+n)} + n\right]$$

But $e^{j\pi} = \cos(\pi) + j\sin(\pi) = -1 = e^{-j\pi}$

$$c_n = \frac{1}{4\pi(n^2-1)}\left[-e^{-jn\pi} - e^{-jn\pi} - ne^{-jn\pi} + ne^{-jn\pi} - 2\right] = \frac{1+e^{-jn\pi}}{2\pi(1-n^2)}$$

Thus

$$i(t) = \underline{\sum_{n=-\infty}^{\infty} \frac{1+e^{-jn\pi}}{2\pi(1-n^2)} e^{jn\pi t}}$$

Chapter 17, Solution 56.

$c_o = a_o = 10, \ \omega_o = \pi$

$c_o = (a_n - jb_n)/2 = (1 - jn)/[2(n^2 + 1)]$

$$f(t) = \underline{10 + \sum_{\substack{n=-\infty \\ n\neq 0}}^{\infty} \frac{(1-jn)}{2(n^2+1)} e^{jn\pi t}}$$

Chapter 17, Solution 57.

$a_o = (6/-2) = -3 = c_o$

$c_n = 0.5(a_n - jb_n) = a_n/2 = 3/(n^3 - 2)$

$$f(t) = \underline{-3 + \sum_{\substack{n=-\infty \\ n\neq 0}}^{\infty} \frac{3}{n^3-2} e^{j50nt}}$$

Chapter 17, Solution 58.

$c_n = (a_n - jb_n)/2, \ (-1) = \cos(n\pi), \ \omega_o = 2\pi/T = 1$

$c_n = [(\cos(n\pi) - 1)/(2\pi n^2)] - j\cos(n\pi)/(2n)$

Thus

$$f(t) = \underline{\frac{\pi}{4} + \sum\left(\frac{\cos(n\pi)-1}{2\pi n^2} - j\frac{\cos(n\pi)}{2n}\right)e^{jnt}}$$

Chapter 17, Solution 59.

For f(t), $T = 2\pi$, $\omega_o = 2\pi/T = 1$.

a_o = DC component = $(1x\pi + 0)/2\pi = 0.5$

For h(t), $T = 2$, $\omega_o = 2\pi/T = \pi$.

$a_o = (3x1 - 2x1)/2 = 0.5$

Thus by replacing $\omega_o = 1$ with $\omega_o = \pi$ and multiplying the magnitude by five, we obtain

$$\underline{h(t) = \frac{1}{2} - \sum_{\substack{n=-\infty \\ n\neq 0}}^{\infty} \frac{j5e^{j(2n+1)\pi t}}{(2n+1)\pi}}$$

Chapter 17, Solution 60.

From Problem 16.17,

$a_o = 0 = a_n$, $b_n = [2/(n\pi)][1 - 2\cos(n\pi)]$, $c_o = \underline{\mathbf{0}}$

$c_n = (a_n - jb_n)/2 = \underline{\mathbf{[j/(n\pi)][2\cos(n\pi) - 1],\ n \neq 0}}$.

Chapter 17, Solution 61.

(a) $\omega_o = 1$.

$$f(t) = a_o + \sum A_n \cos(n\omega_o t - \phi_n)$$

$$= 6 + 4\cos(t + 50°) + 2\cos(2t + 35°) + \cos(3t + 25°) + 0.5\cos(4t + 20°)$$

$$= 6 + 4\cos(t)\cos(50°) - 4\sin(t)\sin(50°) + 2\cos(2t)\cos(35°) - 2\sin(2t)\sin(35°) + \cos(3t)\cos(25°) - \sin(3t)\sin(25°) + 0.5\cos(4t)\cos(20°) - 0.5\sin(4t)\sin(20°)$$

$$= \underline{\mathbf{6 + 2.571\cos(t) - 3.73\sin(t) + 1.635\cos(2t) - 1.147\sin(2t) + 0.906\cos(3t) - 0.423\sin(3t) + 0.47\cos(4t) - 0.171\sin(4t)}}$$

(b) $$f_{rms} = \sqrt{a_o^2 + \frac{1}{2}\sum_{n=1}^{\infty} A_n^2}$$

$$f_{rms}^2 = 6^2 + 0.5[4^2 + 2^2 + 1^2 + (0.5)^2] = 46.625$$

$$f_{rms} = \underline{\mathbf{6.828}}$$

Chapter 17, Solution 62.

(a) $\omega_o = 20 = 2\pi / T \quad \longrightarrow \quad T = \dfrac{2\pi}{20} = \underline{0.3141\text{s}}$

(b) $f(t) = a_o + \sum_{n=1}^{\infty} A_n \cos(n\omega_o t + \phi_n) = 3 + 4\cos(20t + 90^o) + 5.1\cos(40t + 90^o) + ...$

$$\underline{f(t) = 3 - 4\sin 20t - 5.1\sin 40t - 2.7\sin 60t - 1.8\sin 80t - ....}$$

Chapter 17, Solution 63.

This is an even function.

$T = 3,\ \omega_o = 2\pi/3,\ b_n = 0.$

$$f(t) = \begin{vmatrix} 1, & 0 < t < 1 \\ 2, & 1 < t < 1.5 \end{vmatrix}$$

$$a_o = \frac{2}{T}\int_0^{T/2} f(t)dt = \frac{2}{3}\left[\int_0^1 1\,dt + \int_1^{1.5} 2\,dt\right] = (2/3)[1 + 1] = 4/3$$

$$a_n = \frac{4}{T}\int_0^{T/2} f(t)\cos(n\omega_o t)dt = \frac{4}{3}\left[\int_0^1 1\cos(2n\pi t/3)dt + \int_1^{1.5} 2\cos(2n\pi t/3)dt\right]$$

$$= \frac{4}{3}\left[\frac{3}{2n\pi}\sin\left(\frac{2n\pi t}{3}\right)\Bigg|_0^1 + \frac{6}{2n\pi}\sin\left(\frac{2n\pi t}{3}\right)\Bigg|_1^{1.5}\right]$$

$$= [-2/(n\pi)]\sin(2n\pi/3)$$

$$f_2(t) = \frac{4}{3} - \frac{2}{\pi}\sum_{n=1}^{\infty}\frac{1}{n}\sin\left(\frac{3n\pi}{3}\right)\cos\left(\frac{2n\pi t}{3}\right)$$

$a_o = 4/3 = 1.3333, \quad \omega_o = 2\pi/3, \quad a_n = -[2/(n\pi)]\sin(2n\pi t/3)$

$$A_n = \sqrt{a_n^2 + b_n^2} = \left|\frac{2}{n\pi}\sin\left(\frac{2n\pi}{3}\right)\right|$$

$A_1 = 0.5513, \; A_2 = 0.2757, \; A_3 = 0, \; A_4 = 0.1375, \; A_5 = 0.1103$

The amplitude spectra are shown below.

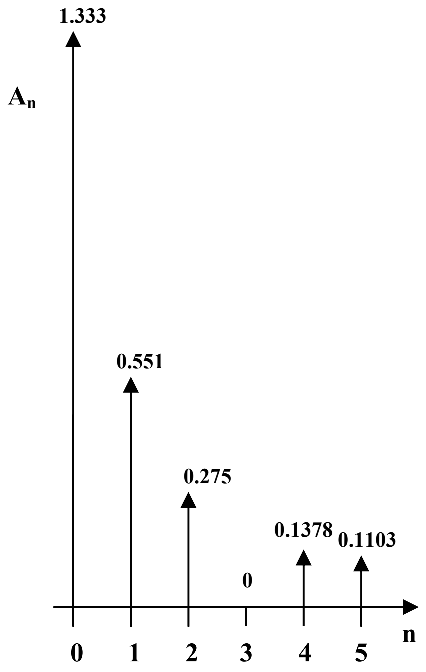

Chapter 17, Solution 64.

The amplitude and phase spectra are shown below.

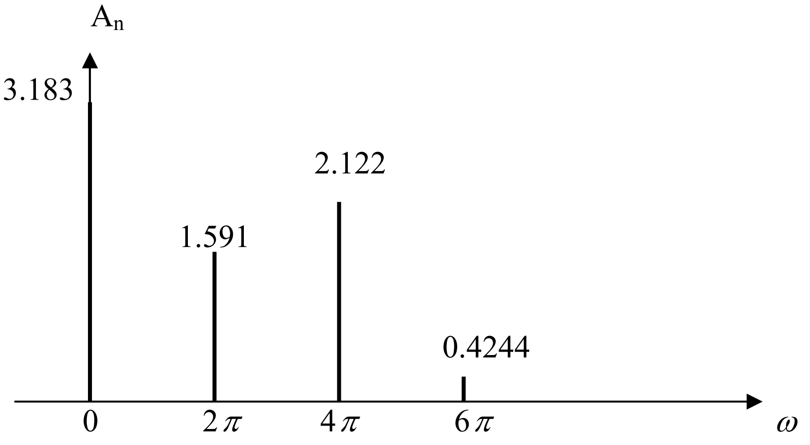

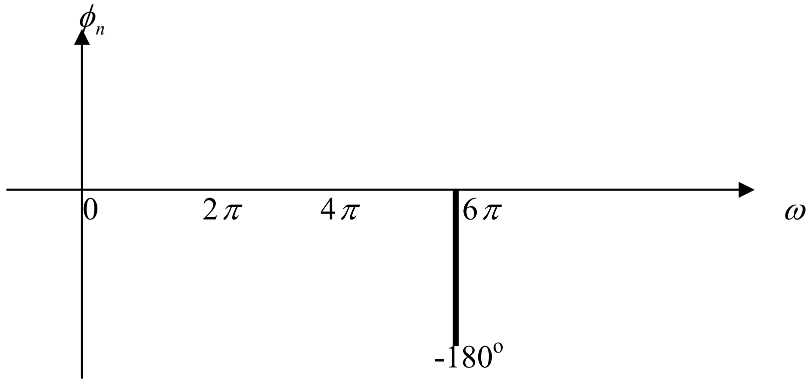

Chapter 17, Solution 65.

$a_n = 20/(n^2\pi^2)$, $b_n = -3/(n\pi)$, $\omega_n = 2n$

$$A_n = \sqrt{a_n^2 + b_n^2} = \sqrt{\frac{400}{n^4\pi^4} + \frac{9}{n^2\pi^2}}$$

$$= \frac{3}{n\pi}\sqrt{1 + \frac{44.44}{n^2\pi^2}}, \quad n = 1, 3, 5, 7, 9, \text{ etc.}$$

n	A_n
1	2.24
3	0.39
5	0.208
7	0.143
9	0.109

$$\phi_n = \tan^{-1}(b_n/a_n) = \tan^{-1}\{[-3/(n\pi)][n^2\pi^2/20]\} = \tan^{-1}(-nx0.4712)$$

n	ϕ_n
1	–25.23°
3	–54.73°
5	–67°
7	–73.14°
9	–76.74°
∞	–90°

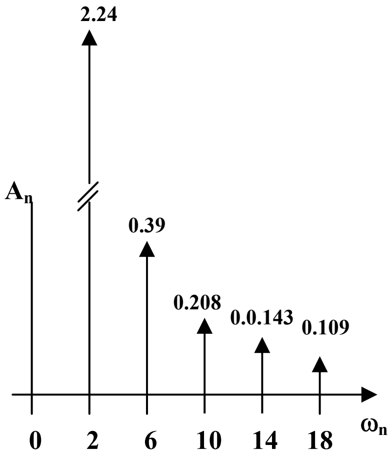

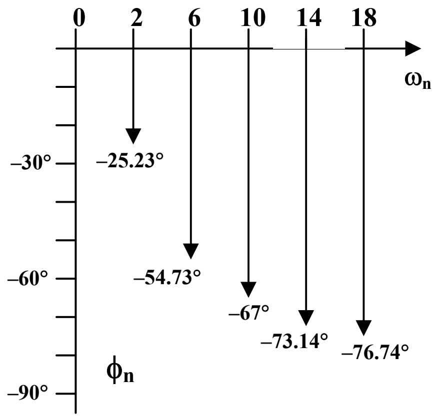

Chapter 17, Solution 66.

The schematic is shown below. The waveform is inputted using the attributes of VPULSE. In the Transient dialog box, we enter Print Step = 0.05, Final Time = 12, Center Frequency = 0.5, Output Vars = V(1) and click enable Fourier. After simulation, the output plot is shown below. The output file includes the following Fourier components.

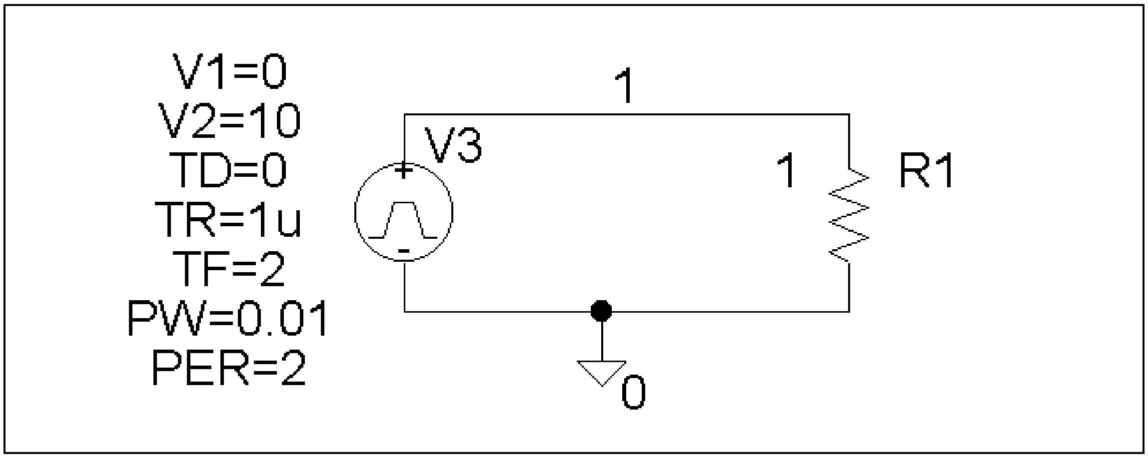

FOURIER COMPONENTS OF TRANSIENT RESPONSE V(1)

DC COMPONENT = 5.099510E+00

HARMONIC NO	FREQUENCY (HZ)	FOURIER COMPONENT	NORMALIZED COMPONENT	PHASE (DEG)	NORMALIZED PHASE (DEG)
1	5.000E-01	3.184E+00	1.000E+00	1.782E+00	0.000E+00
2	1.000E+00	1.593E+00	5.002E-01	3.564E+00	1.782E+00
3	1.500E+00	1.063E+00	3.338E-01	5.347E+00	3.564E+00
4	2.000E+00	7.978E-01	2.506E-01	7.129E+00	5.347E+00
5	2.500E+00	6.392E-01	2.008E-01	8.911E+00	7.129E+00
6	3.000E+00	5.336E-01	1.676E-01	1.069E+01	8.911E+00
7	3.500E+00	4.583E-01	1.440E-01	1.248E+01	1.069E+01
8	4.000E+00	4.020E-01	1.263E-01	1.426E+01	1.248E+01
9	4.500E+00	3.583E-01	1.126E-01	1.604E+01	1.426E+01

TOTAL HARMONIC DISTORTION = 7.363360E+01 PERCENT

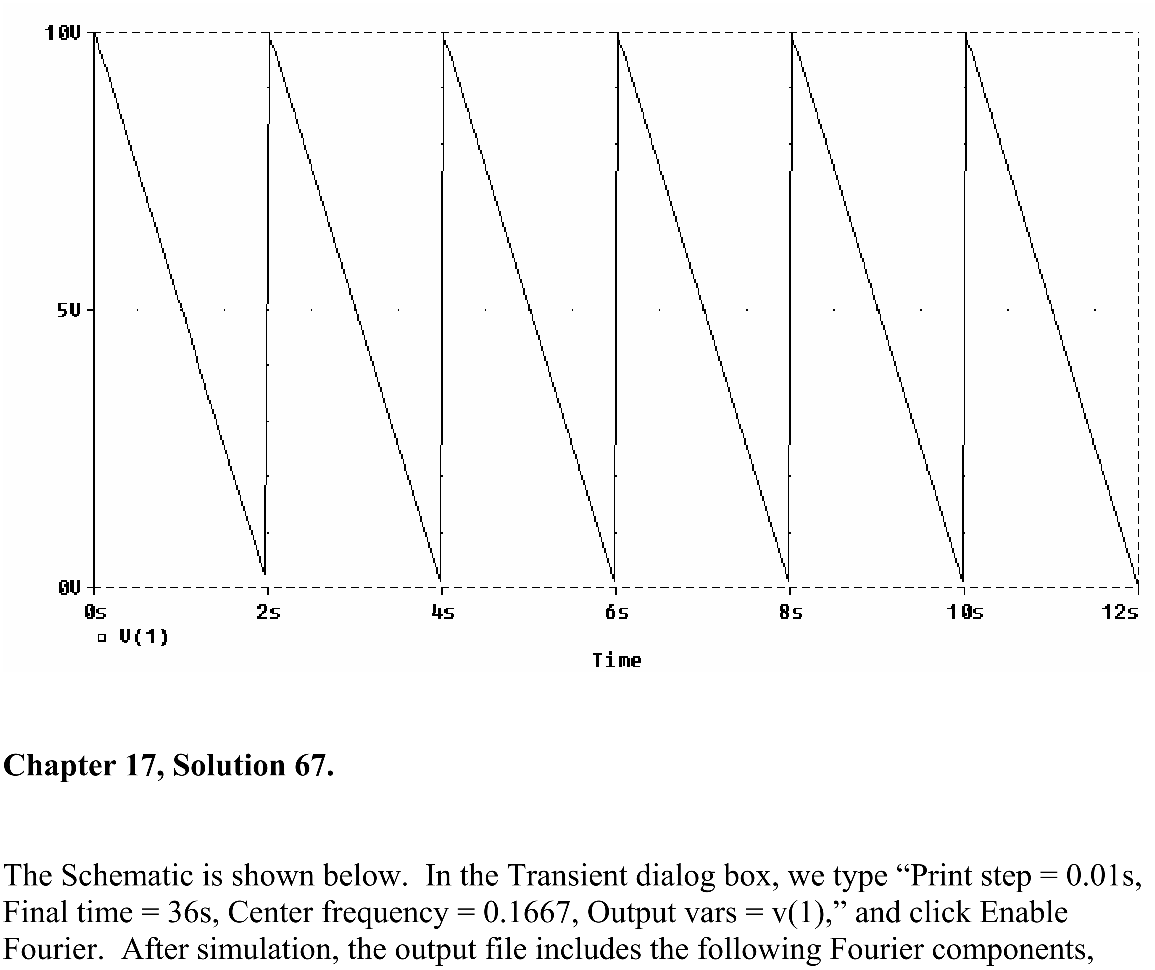

Chapter 17, Solution 67.

The Schematic is shown below. In the Transient dialog box, we type “Print step = 0.01s, Final time = 36s, Center frequency = 0.1667, Output vars = v(1),” and click Enable Fourier. After simulation, the output file includes the following Fourier components,

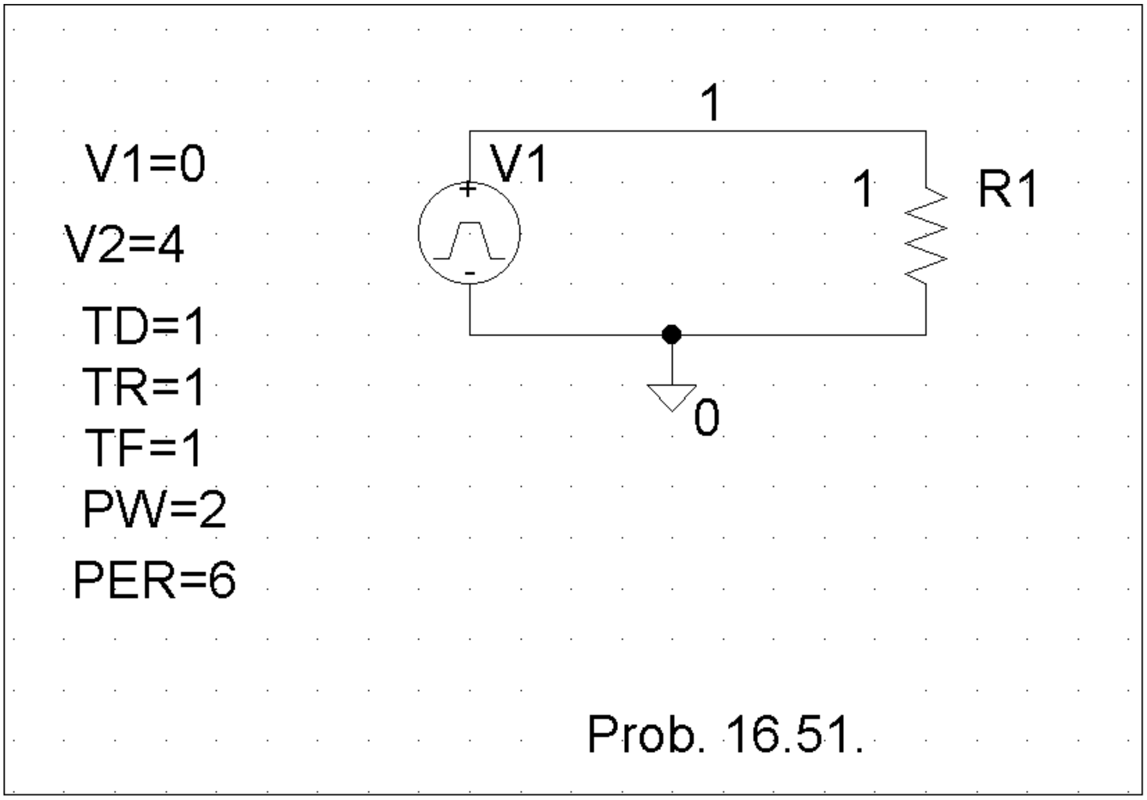

FOURIER COMPONENTS OF TRANSIENT RESPONSE V(1)

DC COMPONENT = 2.000396E+00

HARMONIC NO	FREQUENCY (HZ)	FOURIER COMPONENT	NORMALIZED COMPONENT	PHASE (DEG)	NORMALIZED PHASE (DEG)
1	1.667E-01	2.432E+00	1.000E+00	-8.996E+01	0.000E+00
2	3.334E-01	6.576E-04	2.705E-04	-8.932E+01	6.467E-01
3	5.001E-01	5.403E-01	2.222E-01	9.011E+01	1.801E+02
4	6.668E-01	3.343E-04	1.375E-04	9.134E+01	1.813E+02
5	8.335E-01	9.716E-02	3.996E-02	-8.982E+01	1.433E-01
6	1.000E+00	7.481E-06	3.076E-06	-9.000E+01	-3.581E-02
7	1.167E+00	4.968E-02	2.043E-02	-8.975E+01	2.173E-01
8	1.334E+00	1.613E-04	6.634E-05	-8.722E+01	2.748E+00
9	1.500E+00	6.002E-02	2.468E-02	9.032E+01	1.803E+02

TOTAL HARMONIC DISTORTION = 2.280065E+01 PERCENT

Chapter 17, Solution 68.

The schematic is shown below. We set the final time = 6T=12s and the center frequency = 1/T = 0.5. When the schematic is saved and run, we obtain the Fourier series from the output file as shown below.

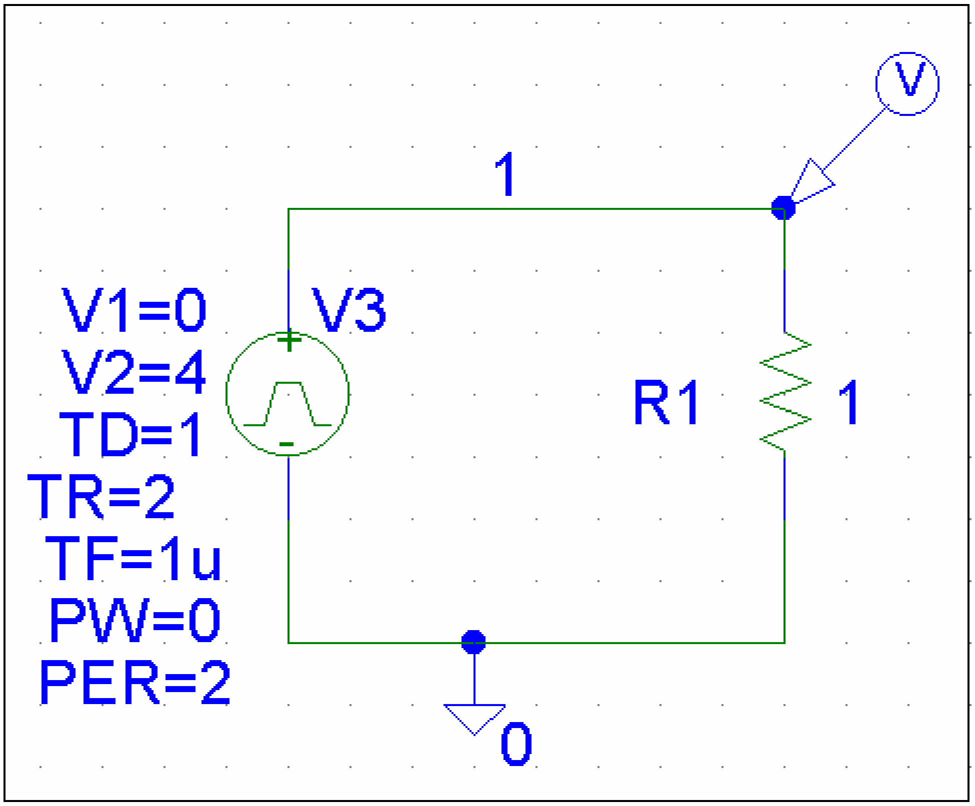

FOURIER COMPONENTS OF TRANSIENT RESPONSE V(1)

DC COMPONENT = 1.990000E+00

HARMONIC NO	FREQUENCY (HZ)	FOURIER COMPONENT	NORMALIZED COMPONENT	PHASE (DEG)	NORMALIZED PHASE (DEG)
1	5.000E-01	1.273E+00	1.000E+00	9.000E-01	0.000E+00
2	1.000E+00	6.367E-01	5.001E-01	-1.782E+02	1.791E+02
3	1.500E+00	4.246E-01	3.334E-01	2.700E+00	1.800E+00
4	2.000E+00	3.185E-01	2.502E-01	-1.764E+02	-1.773E+02
5	2.500E+00	2.549E-01	2.002E-01	4.500E+00	3.600E+00
6	3.000E+00	2.125E-01	1.669E-01	-1.746E+0	-1.755E+02
7	3.500E+00	1.823E-01	1.431E-01	6.300E+00	5.400E+00
8	4.000E+00	1.596E-01	1.253E-01	-1.728E+02	-1.737E+02
9	4.500E+00	1.419E-01	1.115E-01	8.100E+00	7.200E+00

Chapter 17, Solution 69.

The schematic is shown below. In the Transient dialog box, set Print Step = 0.05 s, Final Time = 120, Center Frequency = 0.5, Output Vars = V(1) and click enable Fourier. After simulation, we obtain V(1) as shown below. We also obtain an output file which includes the following Fourier components.

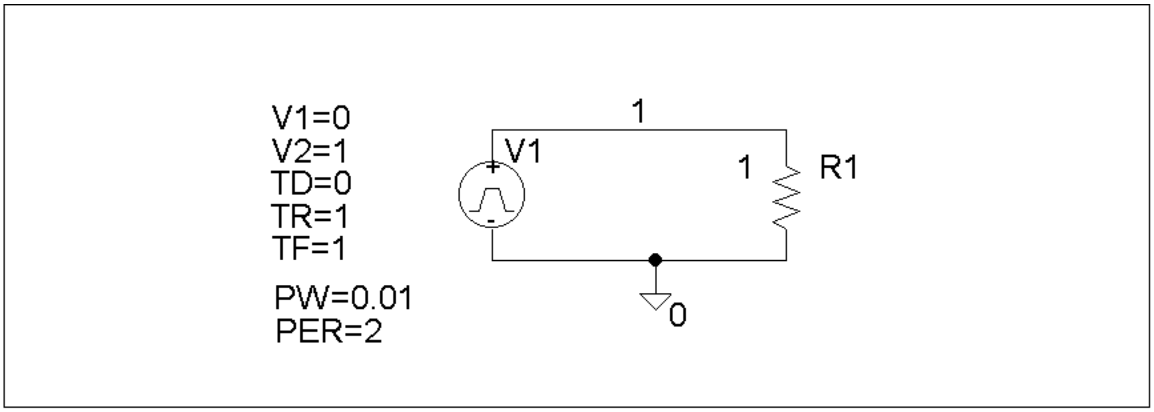

FOURIER COMPONENTS OF TRANSIENT RESPONSE V(1)

DC COMPONENT = 5.048510E-01

HARMONIC NO	FREQUENCY (HZ)	FOURIER COMPONENT	NORMALIZED COMPONENT	PHASE (DEG)	NORMALIZED PHASE (DEG)
1	5.000E-01	4.056E-01	1.000E+00	-9.090E+01	0.000E+00
2	1.000E+00	2.977E-04	7.341E-04	-8.707E+01	3.833E+00
3	1.500E+00	4.531E-02	1.117E-01	-9.266E+01	-1.761E+00
4	2.000E+00	2.969E-04	7.320E-04	-8.414E+01	6.757E+00
5	2.500E+00	1.648E-02	4.064E-02	-9.432E+01	-3.417E+00
6	3.000E+00	2.955E-04	7.285E-04	-8.124E+01	9.659E+00
7	3.500E+00	8.535E-03	2.104E-02	-9.581E+01	-4.911E+00
8	4.000E+00	2.935E-04	7.238E-04	-7.836E+01	1.254E+01
9	4.500E+00	5.258E-03	1.296E-02	-9.710E+01	-6.197E+00

TOTAL HARMONIC DISTORTION = 1.214285E+01 PERCENT

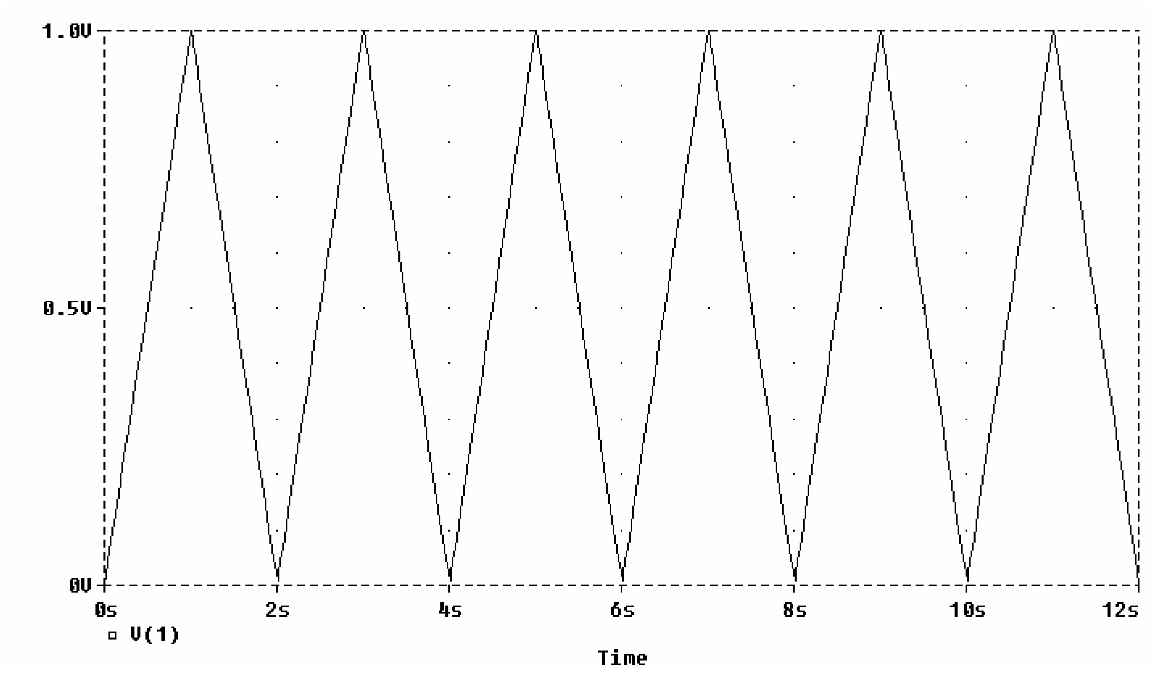

Chapter 17, Solution 70.

The schematic is shown below. In the Transient dialog box, we set Print Step = 0.02 s, Final Step = 12 s, Center Frequency = 0.5, Output Vars = V(1) and V(2), and click enable Fourier. After simulation, we compare the output and output waveforms as shown. The output includes the following Fourier components.

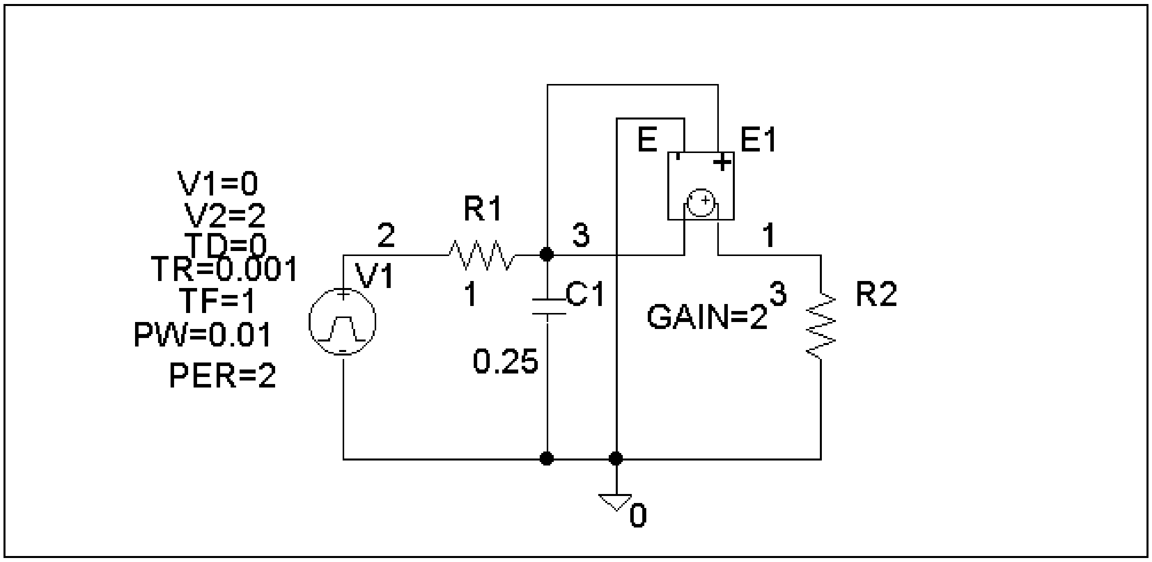

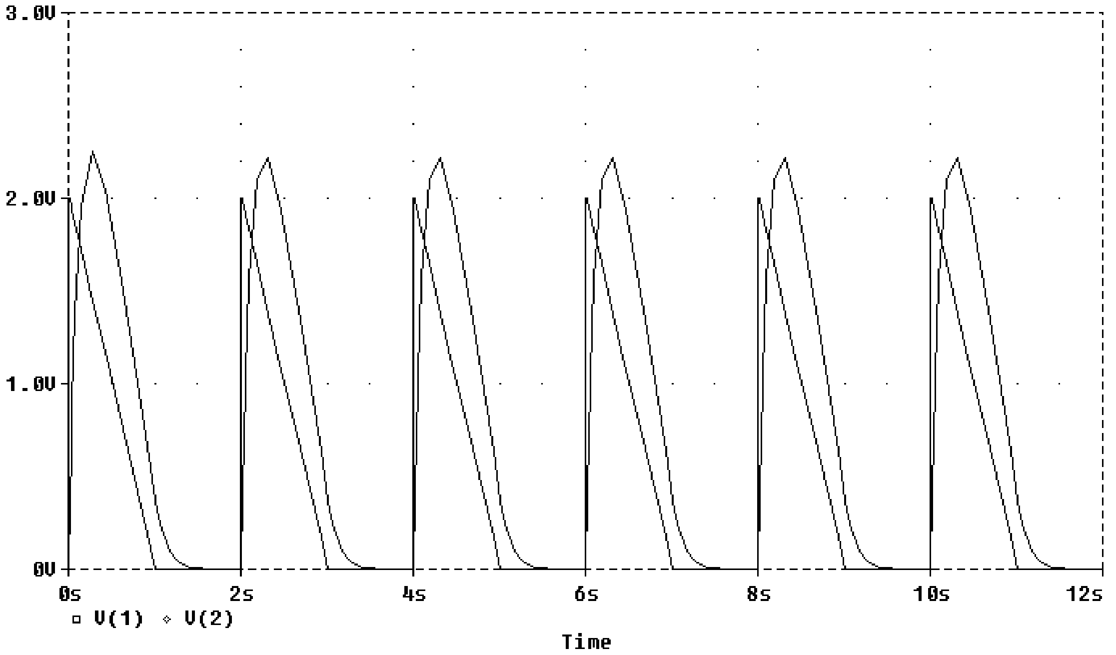

FOURIER COMPONENTS OF TRANSIENT RESPONSE V(1)

DC COMPONENT = 7.658051E-01

HARMONIC NO	FREQUENCY (HZ)	FOURIER COMPONENT	NORMALIZED COMPONENT	PHASE (DEG)	NORMALIZED PHASE (DEG)
1	5.000E-01	1.070E+00	1.000E+00	1.004E+01	0.000E+00
2	1.000E+00	3.758E-01	3.512E-01	-3.924E+01	-4.928E+01
3	1.500E+00	2.111E-01	1.973E-01	-3.985E+01	-4.990E+01
4	2.000E+00	1.247E-01	1.166E-01	-5.870E+01	-6.874E+01
5	2.500E+00	8.538E-02	7.980E-02	-5.680E+01	-6.685E+01
6	3.000E+00	6.139E-02	5.738E-02	-6.563E+01	-7.567E+01
7	3.500E+00	4.743E-02	4.433E-02	-6.520E+01	-7.524E+01
8	4.000E+00	3.711E-02	3.469E-02	-7.222E+01	-8.226E+01
9	4.500E+00	2.997E-02	2.802E-02	-7.088E+01	-8.092E+01

TOTAL HARMONIC DISTORTION = 4.352895E+01 PERCENT

Chapter 17, Solution 71.

The schematic is shown below. We set Print Step = 0.05, Final Time = 12 s, Center Frequency = 0.5, Output Vars = I(1), and click enable Fourier in the Transient dialog box. After simulation, the output waveform is as shown. The output file includes the following Fourier components.

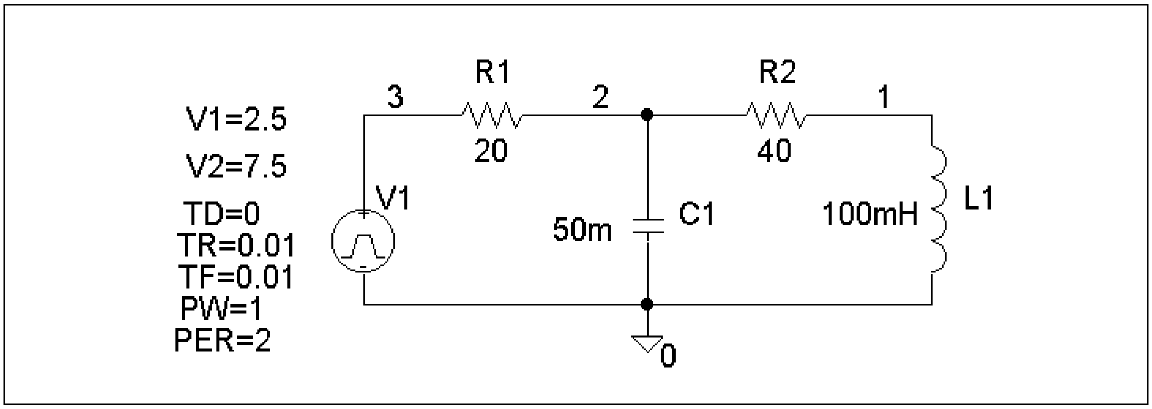

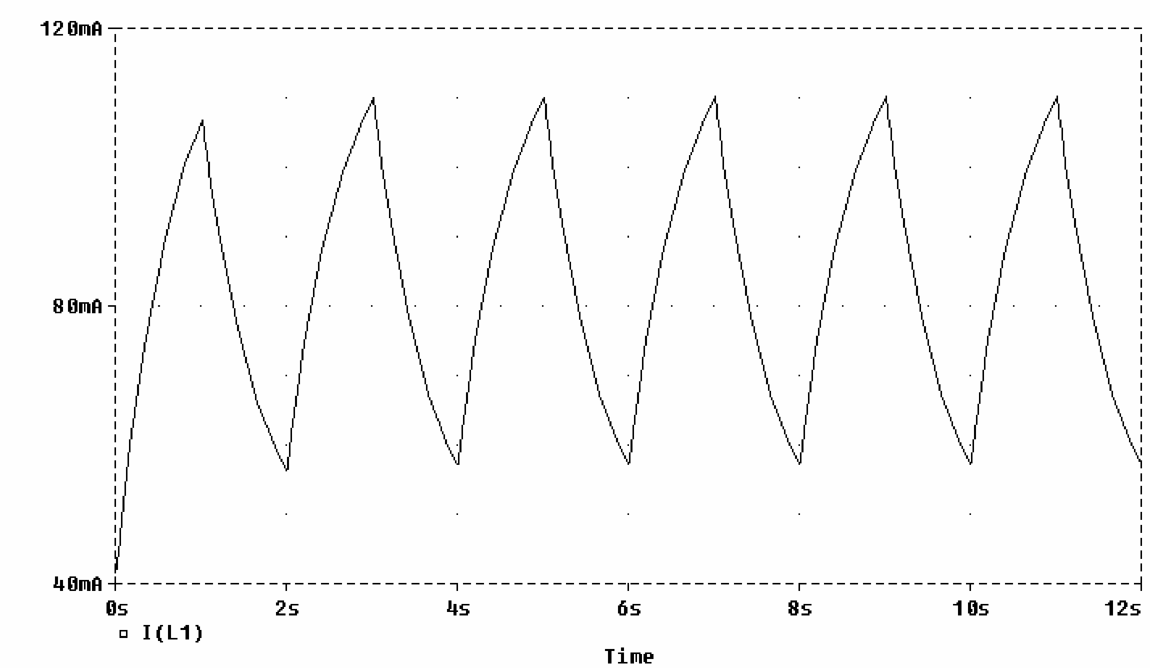

FOURIER COMPONENTS OF TRANSIENT RESPONSE I(L_L1)

DC COMPONENT = 8.374999E-02

HARMONIC NO	FREQUENCY (HZ)	FOURIER COMPONENT	NORMALIZED COMPONENT	PHASE (DEG)	NORMALIZED PHASE (DEG)
1	5.000E-01	2.287E-02	1.000E+00	-6.749E+01	0.000E+00
2	1.000E+00	1.891E-04	8.268E-03	8.174E+00	7.566E+01
3	1.500E+00	2.748E-03	1.201E-01	-8.770E+01	-2.021E+01
4	2.000E+00	9.583E-05	4.190E-03	-1.844E+00	6.565E+01
5	2.500E+00	1.017E-03	4.446E-02	-9.455E+01	-2.706E+01
6	3.000E+00	6.366E-05	2.783E-03	-7.308E+00	6.018E+01
7	3.500E+00	5.937E-04	2.596E-02	-9.572E+01	-2.823E+01
8	4.000E+00	6.059E-05	2.649E-03	-2.808E+01	3.941E+01
9	4.500E+00	2.113E-04	9.240E-03	-1.214E+02	-5.387E+01

TOTAL HARMONIC DISTORTION = 1.314238E+01 PERCENT

Chapter 17, Solution 72.

$T = 5, \ \omega_o = 2\pi/T = 2\pi/5$

f(t) is an odd function. $a_o = 0 = a_n$

$$b_n = \frac{4}{T}\int_0^{T/2} f(t)\sin(n\omega_o t)dt = \frac{4}{5}\int_0^{10} 10\sin(0.4n\pi t)dt$$

$$= -\frac{8x5}{2n\pi}\cos(0.4\pi nt)\Big|_0^1 = \frac{20}{n\pi}[1-\cos(0.4n\pi)]$$

$$f(t) = \underline{\boldsymbol{\frac{20}{\pi}\sum_{n=1}^{\infty}\frac{1}{n}[1-\cos(0.4n\pi)]\sin(0.4n\pi t)}}$$

Chapter 17, Solution 73.

$$p = \frac{V_{DC}^2}{R} + \frac{1}{2}\sum\frac{V_n^2}{R}$$

$= 0 + 0.5[(2^2 + 1^2 + 1^2)/10] =$ **300 mW**

Chapter 17, Solution 74.

(a) $A_n = \sqrt{a_n^2 + b_n^2}$, $\phi = \tan^{-1}(b_n/a_n)$

$A_1 = \sqrt{6^2 + 8^2} = 10$, $\phi_1 = \tan^{-1}(6/8) = 36.87°$

$A_2 = \sqrt{3^2 + 4^2} = 5$, $\phi_2 = \tan^{-1}(3/4) = 36.87°$

i(t) = **{4 + 10cos(100πt – 36.87°) – 5cos(200πt – 36.87°)} A**

(b) $p = I_{DC}^2 R + 0.5\sum I_n^2 R$

$= 2[4^2 + 0.5(10^2 + 5^2)] =$ **157 W**

Chapter 17, Solution 75.

The lowpass filter is shown below.

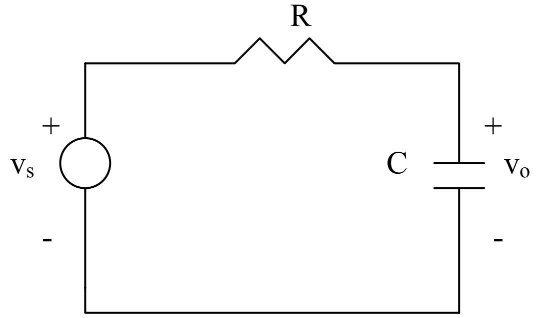

$$v_s = \frac{A\tau}{T} + \frac{2A}{T}\sum_{n=1}^{\infty}\frac{1}{n}\sin\frac{n\pi\tau}{T}\cos n\omega_o t$$

$$V_o = \frac{\frac{1}{j\omega_n C}}{R + \frac{1}{j\omega_n C}} V_s = \frac{1}{1 + j\omega_n RC} V_s, \quad \omega_n = n\omega_o = 2n\pi / T$$

For n=0, (dc component), $V_o = V_s = \frac{A\tau}{T}$ (1)

For the nth harmonic,

$$V_o = \frac{1}{\sqrt{1+\omega^2{}_n R^2 C^2}\angle \tan^{-1}\omega_n RC} \bullet \frac{2A}{nT}\sin\frac{n\pi\tau}{T}\angle -90^o$$

When n=1, $|V_o| = \frac{2A}{T}\sin\frac{n\pi\tau}{T} \bullet \frac{1}{\sqrt{1+\frac{4\pi^2}{T}R^2C^2}}$ (2)

From (1) and (2),

$$\frac{A\tau}{T} = 50x\frac{2A}{T}\sin\frac{\pi}{10}\frac{1}{\sqrt{1+\frac{4\pi^2}{T}R^2C^2}} \longrightarrow \sqrt{1+\frac{4\pi^2}{T}R^2C^2} = \frac{30.9}{\tau} = 3.09x10^4$$

$$1+\frac{4\pi^2}{T}R^2C^2 = 10^{10} \longrightarrow C = \frac{T}{2\pi R}10^5 = \frac{10^{-2}x3.09x10^4}{4\pi x10^3} = \underline{24.59\,\text{mF}}$$

Chapter 17, Solution 76.

$v_s(t)$ is the same as f(t) in Figure 16.1 except that the magnitude is multiplied by 10. Hence

$$v_o(t) = 5 + \frac{20}{\pi}\sum_{k=1}^{\infty}\frac{1}{n}\sin(n\pi t), \quad n = 2k-1$$

$T = 2$, $\omega_o = 2\pi/T = 2\pi$, $\omega_n = n\omega_o = 2n\pi$
$j\omega_n L = j2n\pi$; $Z = R||10 = 10R/(10+R)$
$V_o = ZV_s/(Z+j2n\pi) = [10R/(10R+j2n\pi(10+R))]V_s$

$$V_o = \frac{10R\angle -\tan^{-1}\{(n\pi/5R)(10+R)\}}{\sqrt{100R^2+4n^2\pi^2(10+R)^2}}V_s$$

$V_s = [20/(n\pi)]\angle 0°$

The source current I_s is

$$I_s = \frac{V_s}{Z+j2n\pi} = \frac{V_s}{\frac{10R}{10+R}+j2n\pi} = \frac{(10+R)\frac{20}{n\pi}}{10R+j2n\pi(10+R)}$$

$$= \frac{(10+R)\frac{20}{n\pi}\angle -\tan^{-1}\{(n\pi/3)(10+R)\}}{\sqrt{100R^2 + 4n^2\pi^2(10+R)^2}}$$

$$p_s = V_{DC}I_{DC} + \frac{1}{2}\sum V_{sn}I_{sn}\cos(\theta_n - \phi_n)$$

For the DC case, L acts like a short-circuit.

$$I_s = \frac{5}{\frac{10R}{10+R}} = \frac{5(10+R)}{10R}, \quad V_s = 5 = V_o$$

$$p_s = \frac{25(10+R)}{10R} + \frac{1}{2}\left[\left(\frac{20}{\pi}\right)^2 \frac{(10+R)\cos\left(\tan^{-1}\left(\frac{\pi}{5}(10+R)\right)\right)}{\sqrt{100R^2 + 4\pi^2(10+R)^2}}\right.$$

$$\left. + \left(\frac{10}{\pi}\right)^2 \frac{(10+R)^2\cos\left(\tan^{-1}\left(\frac{2\pi}{5}(10+R)\right)\right)}{\sqrt{100R^2 + 16\pi^2(10+R)^2}} + \cdots\right]$$

$$p_s = \frac{V_{DC}}{R} + \frac{1}{2}\sum_{n=1}^{\infty}\frac{V_{on}}{R}$$

$$= \frac{25}{R} + \frac{1}{2}\left[\frac{100R}{100R^2 + 4\pi^2(10+R)^2} + \frac{100R}{100R^2 + 10\pi^2(10+R)^2} + \cdots\right]$$

We want $p_o = (70/100)p_s = 0.7p_s$. Due to the complexity of the terms, we consider only the DC component as an approximation. In fact the DC component has the latgest share of the power for both input and output signals.

$$\frac{25}{R} = \frac{7}{10} x \frac{25(10+R)}{10R}$$

100 = 70 + 7R which leads to R = 30/7 = **4.286 Ω**

Chapter 17, Solution 77.

(a) For the first two AC terms, the frequency ratio is 6/4 = 1.5 so that the highest common factor is 2. Hence $\omega_o = 2$.

$$T = 2\pi/\omega_o = 2\pi/2 = \underline{\pi}$$

(b) The average value is the DC component = $\underline{-2}$

(c) $$V_{rms} = \sqrt{a_o + \frac{1}{2}\sum_{n=1}^{\infty}(a_n^2 + b_n^2)}$$

$$V_{rms}^2 = (-2)^2 + \frac{1}{2}(10^2 + 8^2 + 6^2 + 3^2 + 1^2) = 121.5$$

$$V_{rms} = \underline{\mathbf{11.02\ V}}$$

Chapter 17, Solution 78.

(a) $$p = \frac{V_{DC}^2}{R} + \frac{1}{2}\sum\frac{V_n^2}{R} = \frac{V_{DC}^2}{R} + \sum\frac{V_{n,rms}^2}{R}$$

$$= 0 + (40^2/5) + (20^2/5) + (10^2/5) = \underline{\mathbf{420\ W}}$$

(b) 5% increase = (5/100)420 = 21

$$p_{DC} = 21\text{ W} = \frac{V_{DC}^2}{R} \quad \text{which leads to} \quad V_{DC}^2 = 21R = 105$$

$$V_{DC} = \underline{\mathbf{10.25\ V}}$$

Chapter 17, Solution 79.

From Table 17.3, it is evident that $a_n = 0$,

$b_n = 4A/[\pi(2n - 1)]$, $A = 10$.

A Fortran program to calculate b_n is shown below. The result is also shown.

```
C       FOR PROBLEM 17.79
              DIMENSION B(20)

              A = 10
              PIE = 3.142
              C = 4.*A/PIE
              DO 10 N = 1, 10
              B(N) = C/(2.*FLOAT(N) – 1.)
              PRINT *, N, B(N)
10            CONTINUE
              STOP
              END
```

n	b_n
1	12.731
2	4.243
3	2.546
4	1.8187
5	1.414
6	1.1573
7	0.9793
8	0.8487
9	0.7498
10	0.67

Chapter 17, Solution 80.

From Problem 17.55,

$$c_n = [1 + e^{-jn\pi}]/[2\pi(1 - n^2)]$$

This is calculated using the Fortran program shown below. The results are also shown.

```
C       FOR PROBLEM 17.80
              COMPLEX X, C(0:20)

              PIE = 3.1415927
              A = 2.0*PIE
              DO 10 N = 0, 10
              IF(N.EQ.1) GO TO 10
              X = CMPLX(0, PIE*FLOAT(N))
              C(N) = (1.0 + CEXP(–X))/(A*(1 – FLOAT(N*N)))
              PRINT *, N, C(N)
10            CONTINUE
              STOP
              END
```

n	c_n
0	$0.3188 + j0$
1	0
2	$-0.1061 + j0$
3	0
4	$-0.2121x10^{-1} + j0$
5	0
6	$-0.9095x10^{-2} + j0$
7	0
8	$-0.5052x10^{-2} + j0$
9	0
10	$-0.3215x10^{-2} + j0$

Chapter 17, Solution 81.

(a)

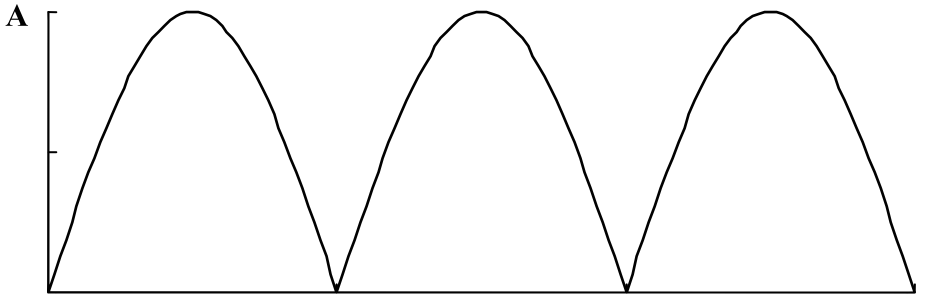

$$f(t) = \frac{2A}{\pi} - \frac{4A}{\pi}\sum_{n=1}^{\infty}\frac{1}{4n^2 - 1}\cos(n\omega_o t)$$

The total average power is $p_{avg} = F_{rms}{}^2 R = F_{rms}{}^2$ since $R = 1$ ohm.

$$P_{avg} = F_{rms}{}^2 = \frac{1}{T}\int_0^T f^2(t)dt = \underline{\mathbf{0.5A^2}}$$

(b) From the Fourier series above

$|c_o| = 2A/2, \; |c_n| = 4A/[\pi(4n^2 - 1)]$

n	ω_o	$\lvert c_n\rvert$	$2\lvert c_n\rvert^2$	% power
0	0	$2A/\pi$	$4A^2/(\pi^2)$	81.1%
1	$2\omega_o$	$2A/(3\pi)$	$8A^2/(9\pi^2)$	18.01%
2	$4\omega_o$	$2A/(15\pi)$	$2A^2/(225\pi^2)$	0.72%
3	$6\omega_o$	$2A/(35\pi)$	$8A^2/(1225\pi^2)$	0.13%
4	$8\omega_o$	$2A/(63\pi)$	$8A^2/(3969\pi^2)$	0.04%

(c) **81.1%**

(d) **0.72%**

Chapter 17, Solution 82.

$$P = \frac{V_{DC}^2}{R} + \frac{1}{2}\sum_{n=1}^{\infty}\frac{V_n^2}{R}$$

Assuming V is an amplitude-phase form of Fourier series. But

$$|A_n| = 2|C_n|, \quad c_o = a_o$$

$$|A_n|^2 = 4|C_n|^2$$

Hence,

$$P = \frac{c_o^2}{R} + 2\sum_{n=1}^{\infty}\frac{c_n^2}{R}$$

Alternatively,

$$P = \frac{V_{rms}^2}{R}$$

where

$$V_{rms}^2 = a_o^2 + \frac{1}{2}\sum_{n=1}^{\infty}A_n^2 = c_o^2 + 2\sum_{n=1}^{\infty}c_n^2 = \sum_{n=-\infty}^{\infty}c_n^2$$

$$= 10^2 + 2(8.5^2 + 4.2^2 + 2.1^2 + 0.5^2 + 0.2^2)$$

$$= 100 + 2\text{x}94.57 = 289.14$$

$P = 289.14/4 =$ **72.3 W**

Chapter 18, Solution 1.

$$f'(t) = \delta(t+2) - \delta(t+1) - \delta(t-1) + \delta(t-2)$$
$$j\omega F(\omega) = e^{j2\omega} - e^{j\omega} - e^{-j\omega} + e^{-j\omega 2}$$
$$= 2\cos 2\omega - 2\cos\omega$$

$$F(\omega) = \underline{\frac{\mathbf{2[\cos 2\omega - \cos\omega]}}{\mathbf{j\omega}}}$$

Chapter 18, Solution 2.

$$f(t) = \begin{bmatrix} t, & 0 < t < 1 \\ 0, & \text{otherwise} \end{bmatrix}$$

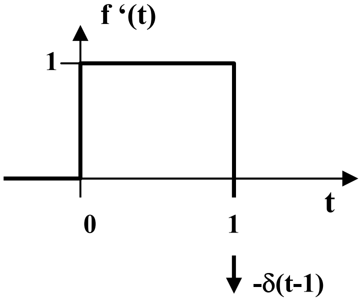

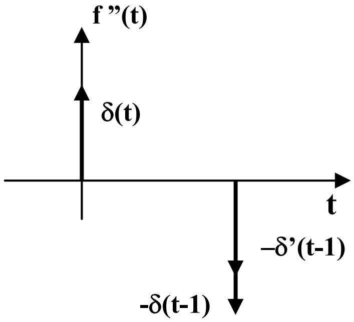

$f''(t) = \delta(t) - \delta(t-1) - \delta'(t-1)$

Taking the Fourier transform gives

$$-\omega^2 F(\omega) = 1 - e^{-j\omega} - j\omega e^{-j\omega}$$

$$F(\omega) = \underline{\frac{\mathbf{(1 + j\omega)e^{j\omega} - 1}}{\mathbf{\omega^2}}}$$

or $F(\omega) = \int_0^1 t\, e^{-j\omega t}\, dt$

But $\int x\, e^{ax} dx = \frac{e^{ax}}{a^2}(ax - 1) + c$

$$F(\omega) = \frac{e^{-j\omega}}{(-j\omega)^2}(-j\omega t - 1)\Big|_0^1 = \underline{\frac{\mathbf{1}}{\mathbf{\omega^2}}\left[\mathbf{(1 + j\omega)e^{-j\omega} - 1}\right]}$$

Chapter 18, Solution 3.

$$f(t) = \frac{1}{2}t, \; -2 < t < 2, \qquad f'(t) = \frac{1}{2}, \; -2 < t < 2$$

$$F(\omega) = \int_{-2}^{2} \frac{1}{2} t\, e^{j\omega t} dt = \frac{e^{-j\omega t}}{2(-j\omega)^2}(-j\omega t - 1)\Big|_{-2}^{2}$$

$$= -\frac{1}{2\omega^2}\left[e^{-j\omega 2}(-j\omega 2 - 1) - e^{j\omega 2}(j\omega 2 - 1)\right]$$

$$= -\frac{1}{2\omega^2}\left[-j\omega 2\left(e^{j\omega 2} + e^{j\omega 2}\right) + e^{j\omega 2} - e^{-j\omega 2}\right]$$

$$= -\frac{1}{2\omega^2}\left(-j\omega 4\cos 2\omega + j2\sin 2\omega\right)$$

$$F(\omega) = \underline{\mathbf{\frac{j}{\omega^2}(\sin 2\omega - 2\omega\cos 2\omega)}}$$

Chapter 18, Solution 4.

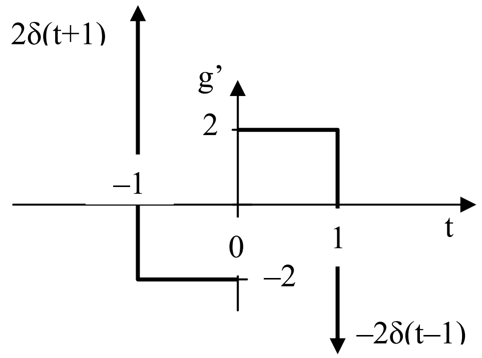

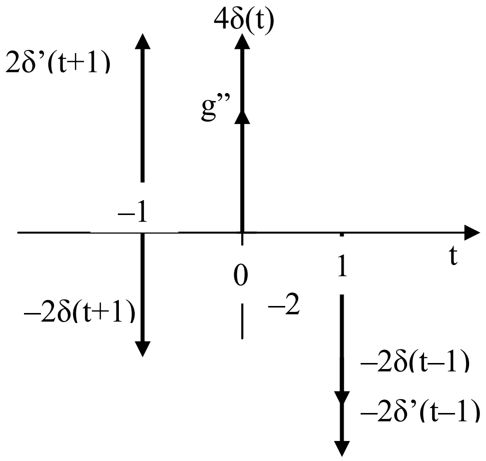

$$g'' = -2\delta(t+1) + 2\delta'(t+1) + 4\delta(t) - 2\delta(t-1) - 2\delta'(t-1)$$

$$(j\omega)^2 G(\omega) = -2e^{j\omega} + 2j\omega e^{j\omega} + 4 - 2e^{-j\omega} - 2j\omega e^{-j\omega}$$
$$= -4\cos\omega - 4\omega\sin\omega + 4$$

$$\underline{G(\omega) = \frac{4}{\omega^2}(\cos\omega + \omega\sin\omega - 1)}$$

Chapter 18, Solution 5.

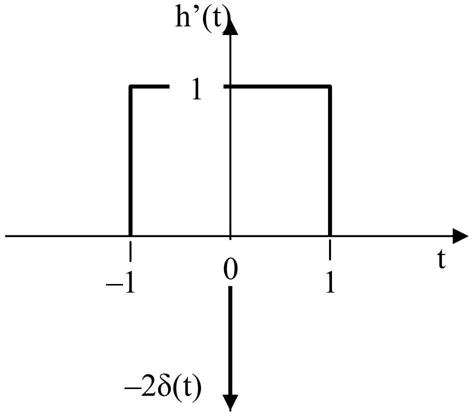

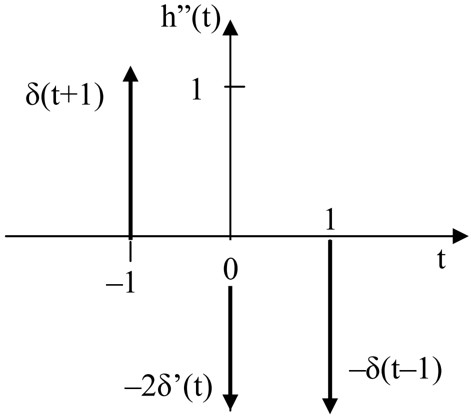

$$h''(t) = \delta(t+1) - \delta(t-1) - 2\delta'(t)$$

$$(j\omega)^2 H(\omega) = e^{j\omega} - e^{-j\omega} - 2j\omega = 2j\sin\omega - 2j\omega$$

$$\underline{H(\omega) = \frac{2j}{\omega} - \frac{2j}{\omega^2}\sin\omega}$$

Chapter 18, Solution 6.

$$F(\omega) = \int_{-1}^{0} (-1)e^{-j\omega t}dt + \int_{0}^{1} te^{-j\omega t}dt$$

$$\text{Re}\,F(\omega) = -\int_{-1}^{0} \cos\omega t dt + \int_{0}^{1} t\cos\omega t dt$$

$$= -\frac{1}{\omega}\sin\omega t \Big|_{-1}^{0} + \left(\frac{1}{\omega^2}\cos\omega t + \frac{t}{\omega}\sin\omega t\right)\Big|_{0}^{1} = \underline{\frac{1}{\omega^2}(\cos\omega - 1)}$$

Chapter 18, Solution 7.

(a) f_1 is similar to the function f(t) in Fig. 17.6.

$$f_1(t) = f(t-1)$$

$$\text{Since } F(\omega) = \frac{2(\cos\omega - 1)}{j\omega}$$

$$F_1(\omega) = e^{j\omega}F(\omega) = \underline{\mathbf{\frac{2e^{-j\omega}(\cos\omega - 1)}{j\omega}}}$$

Alternatively,

$$f_1'(t) = \delta(t) - 2\delta(t-1) + \delta(t-2)$$

$$j\omega F_1(\omega) = 1 - 2e^{-j\omega} + e^{-j2\omega} = e^{-j\omega}(e^{j\omega} - 2 + e^{j\omega})$$

$$= e^{-j\omega}(2\cos\omega - 2)$$

$$F_1(\omega) = \underline{\mathbf{\frac{2e^{-j\omega}(\cos\omega - 1)}{j\omega}}}$$

(b) f_2 is similar to f(t) in Fig. 17.14.
$f_2(t) = 2f(t)$

$$F_2(\omega) = \underline{\mathbf{\frac{4(1 - \cos\omega)}{\omega^2}}}$$

Chapter 18, Solution 8.

(a)
$$F(\omega)=\int_0^1 2e^{-j\omega t}dt+\int_1^2 (4-2t)e^{-j\omega t}dt$$
$$=\frac{2}{-j\omega}e^{-j\omega t}\Big|_0^1+\frac{4}{-j\omega}e^{-j\omega t}\Big|_1^2-\frac{2}{-\omega^2}e^{-j\omega t}(-j\omega t-1)\Big|_1^2$$

$$\underline{F(\omega)=\frac{2}{\omega^2}+\frac{2}{j\omega}e^{-j\omega}+\frac{2}{j\omega}-\frac{4}{j\omega}e^{-j2\omega}-\frac{2}{\omega^2}(1+j2\omega)e^{-j2\omega}}$$

(b) g(t) = 2[u(t+2) – u(t-2)] - [u(t+1) – u(t-1)]

$$\underline{G(\omega)=\frac{4\sin 2\omega}{\omega}-\frac{2\sin\omega}{\omega}}$$

Chapter 18, Solution 9.

(a) y(t) = u(t+2) – u(t-2) + 2[u(t+1) – u(t-1)]

$$\underline{Y(\omega)=\frac{2}{\omega}\sin 2\omega+\frac{4}{\omega}\sin\omega}$$

(b) $$Z(\omega)=\int_0^1(-2t)e^{-j\omega t}dt=\frac{-2e^{-j\omega t}}{-\omega^2}(-j\omega t-1)\Big|_0^1=\underline{\frac{2}{\omega^2}-\frac{2e^{-j\omega}}{\omega^2}(1+j\omega)}$$

Chapter 18, Solution 10.

(a) $x(t) = e^{2t}u(t)$

$X(\omega) =$ **<u>1/(2 + jω)</u>**

(b) $$e^{-(t)}=\begin{cases}e^{-t}, & t>0\\ e^{t}, & t<0\end{cases}$$

$$Y(\omega)=\int_{-1}^{1}y(t)e^{j\omega t}\,dt=\int_{-1}^{0}e^{t}\,e^{j\omega t}\,dt+\int_{0}^{1}e^{-t}\,e^{-j\omega t}\,dt$$

$$= \frac{e^{(1-j\omega)t}}{1-j\omega}\Big|_{-1}^{0} + \frac{e^{-(1+j\omega)t}}{-(1+j\omega)}\Big|_{0}^{1}$$

$$= \frac{2}{1+\omega^2} - e^{-1}\left[\frac{\cos\omega + j\sin\omega}{1-j\omega} + \frac{\cos\omega - j\sin\omega}{1+j\omega}\right]$$

$$Y(\omega) = \underline{\boldsymbol{\frac{2}{1+\omega^2}\left[1 - e^{-1}(\cos\omega - \omega\sin\omega)\right]}}$$

Chapter 18, Solution 11.

$$f(t) = \sin \pi t\,[u(t) - u(t-2)]$$

$$F(\omega) = \int_0^2 \sin \pi t\, e^{-j\omega t}\, dt = \frac{1}{2j}\int_0^2 \left(e^{j\pi t} - e^{-j\pi t}\right)e^{-j\omega t}\, dt$$

$$= \frac{1}{2j}\left[\int_0^2 (e^{+j(-\omega+\pi)t} + e^{-j(\omega+\pi)t})dt\right]$$

$$= \frac{1}{2j}\left[\frac{1}{-j(\omega-\pi)} e^{-j(\omega-\pi)t}\Big|_0^2 + \frac{e^{-j(\omega+\pi)t}}{-j(\omega+\pi)}\Big|_0^2\right]$$

$$= \frac{1}{2}\left(\frac{1-e^{-j2\omega}}{\pi-\omega} + \frac{1-e^{-j2\omega}}{\pi+\omega}\right)$$

$$= \frac{1}{2(\pi^2-\omega^2)}\left(2\pi + 2\pi e^{-j2\omega}\right)$$

$$F(\omega) = \underline{\boldsymbol{\frac{\pi}{\omega^2-\pi^2}\left(e^{-j\omega 2} - 1\right)}}$$

Chapter 18, Solution 12.

(a) $$F(\omega) = \int_0^\infty e^{t}\, e^{-j\omega t}\, dt = \int_0^2 e^{(1-j\omega)t}\, dt$$

$$= \frac{1}{1-j\omega} e^{(1-j\omega)t}\Big|_0^2 = \underline{\boldsymbol{\frac{e^{2-j\omega 2} - 1}{1-j\omega}}}$$

(b) $H(\omega) = \int_{-1}^{0} e^{-j\omega t}\,dt + \int_{0}^{1} (-1)e^{-j\omega t}\,dt$

$$= -\frac{1}{j\omega}\left(1 - e^{j\omega}\right) + \frac{1}{j\omega}\left(e^{-j\omega} - 1\right) = \frac{1}{j\omega}(-2 + 2\cos\omega)$$

$$= \frac{-4\sin^2\omega/2}{j\omega} = \underline{\mathbf{j\omega\left(\frac{\sin\omega/2}{\omega/2}\right)^2}}$$

Chapter 18, Solution 13.

(a) We know that $\mathcal{F}[\cos at] = \pi[\delta(\omega - a) + \delta(\omega + a)]$.

Using the time shifting property,
$\mathcal{F}[\cos a(t - \pi/3a)] = \pi e^{-j\omega\pi/3a}[\delta(\omega - a) + \delta(\omega + a)] = \underline{\pi e^{-j\pi/3}\delta(\omega - a) + \pi e^{j\pi/3}\delta(\omega + a)}$

(b) $\sin\pi(t+1) = \sin\pi t\cos\pi + \cos\pi t\sin\pi = -\sin\pi t$

g(t) = -u(t+1) sin (t+1)

Let x(t) = u(t)sin t, then $X(\omega) = \frac{1}{(j\omega)^2 + 1} = \frac{1}{1 - \omega^2}$

Using the time shifting property,

$$G(\omega) = -\frac{1}{1 - \omega^2}e^{j\omega} = \underline{\frac{e^{j\omega}}{\omega^2 - 1}}$$

(c) Let y(t) = 1 + Asin at, then $Y(\omega) = 2\pi\delta(\omega) + j\pi A[\delta(\omega + a) - \delta(\omega - a)]$
h(t) = y(t) cos bt

Using the modulation property,
$$H(\omega) = \frac{1}{2}[Y(\omega + b) + Y(\omega - b)]$$

$$\underline{H(\omega) = \pi[\delta(\omega + b) + \delta(\omega - b)] + \frac{j\pi A}{2}[\delta(\omega + a + b) - \delta(\omega - a + b) + \delta(\omega + a - b) - \delta(\omega - a - b)]}$$

(d) $I(\omega)=\int_0^4 (1-t)e^{-j\omega t}dt = \frac{e^{-j\omega t}}{-j\omega}-\frac{e^{-j\omega t}}{-\omega^2}(-j\omega t-1)\Big|_0^4 = \underline{\frac{1}{\omega^2}-\frac{e^{-j4\omega}}{j\omega}-\frac{e^{-j4\omega}}{\omega^2}(j4\omega+1)}$

Chapter 18, Solution 14.

(a) $\cos(3t+\pi)=\cos 3t\cos\pi-\sin 3t\sin\pi=\cos 3t(-1)-\sin 3t(0)=-\cos(3t)$

$f(t)=-e^{-t}\cos 3t\, u(t)$

$$F(\omega) = \underline{\frac{-(1+j\omega)}{(1+j\omega)^2+9}}$$

(b)

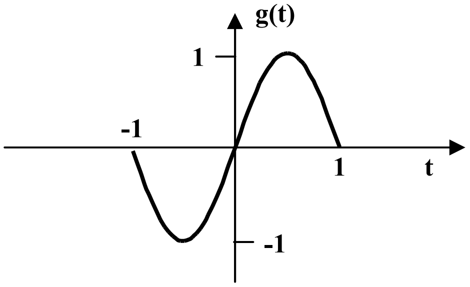

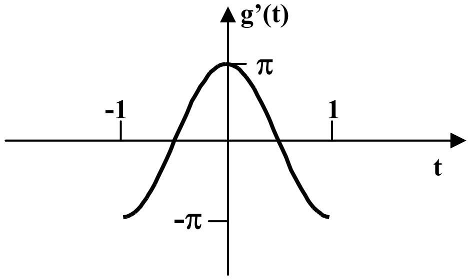

$g'(t)=\pi\cos\pi t[u(t-1)-u(t-1)]$

$g''(t)=-\pi^2 g(t)-\pi\delta(t+1)+\pi\delta(t-1)$

$-\omega^2 G(\omega)=-\pi^2 G(\omega)-\pi e^{j\omega}+\pi e^{-j\omega}$

$(\pi^2-\omega^2)G(\omega)=-\pi(e^{j\omega}-e^{-j\omega})=-2j\pi\sin\omega$

$$G(\omega) = \underline{\frac{2j\pi\sin\omega}{\omega^2-\pi^2}}$$

Alternatively, we compare this with Prob. 17.7

f(t) = g(t - 1)

$F(\omega) = G(\omega)e^{-j\omega}$

$$G(\omega) = F(\omega)e^{j\omega} = \frac{\pi}{\omega^2 - \pi^2}\left(e^{-j\omega} - e^{j\omega}\right)$$

$$= \frac{-j2\pi \sin\omega}{\omega^2 - \pi^2}$$

$$G(\omega) = \underline{\frac{\mathbf{2j\pi \sin\omega}}{\mathbf{\pi^2 - \omega^2}}}$$

(c) $\cos\pi(t-1) = \cos\pi t \cos\pi + \sin\pi t \sin\pi = \cos\pi t(-1) + \sin\pi t(0) = -\cos\pi t$

Let $x(t) = e^{-2(t-1)} \cos\pi(t-1)u(t-1) = -e^2 h(t)$

and $y(t) = e^{-2t}\cos(\pi t)u(t)$

$$Y(\omega) = \frac{2 + j\omega}{(2 + j\omega)^2 + \pi^2}$$

$$y(t) = x(t-1)$$

$$Y(\omega) = X(\omega)e^{-j\omega}$$

$$X(\omega) = \frac{(2 + j\omega)e^{j\omega}}{(2 + j\omega)^2 + \pi^2}$$

$$X(\omega) = -e^2 H(\omega)$$

$$H(\omega) = -e^{-2}X(\omega)$$

$$= \underline{\frac{\mathbf{-(2 + j\omega)e^{j\omega - 2}}}{\mathbf{(2 + j\omega)^2 + \pi^2}}}$$

(d) Let $x(t) = e^{-2t}\sin(-4t)u(-t) = y(-t)$

$p(t) = -x(t)$

where $y(t) = e^{2t}\sin 4t\, u(t)$

$$Y(\omega) = \frac{2 + j\omega}{(2 + j\omega)^2 + 4^2}$$

$$X(\omega) = Y(-\omega) = \frac{2 - j\omega}{(2 - j\omega)^2 + 16}$$

$$p(\omega) = -X(\omega) = \underline{\mathbf{\frac{j\omega - 2}{(j\omega - 2)^2 + 16}}}$$

(e) $$Q(\omega) = \frac{8}{j\omega}e^{-j\omega 2} + 3 - 2\left(\pi\delta(\omega) + \frac{1}{j\omega}\right)e^{-j\omega 2}$$

$$Q(\omega) = \underline{\mathbf{\frac{6}{j\omega}e^{j\omega 2} + 3 - 2\pi\delta(\omega)e^{-j\omega 2}}}$$

Chapter 18, Solution 15.

(a) $$F(\omega) = e^{j3\omega} - e^{-j\omega 3} = \underline{\mathbf{2j\sin 3\omega}}$$

(b) Let $g(t) = 2\delta(t-1)$, $G(\omega) = 2e^{-j\omega}$

$$F(\omega) = \mathcal{F}\left(\int_{-\infty}^{t} g(t)\,dt\right)$$

$$= \frac{G(\omega)}{j\omega} + \pi F(0)\delta(\omega)$$

$$= \frac{2e^{-j\omega}}{j\omega} + 2\pi\delta(-1)\delta(\omega)$$

$$= \underline{\mathbf{\frac{2e^{-j\omega}}{j\omega}}}$$

(c) $$\mathcal{F}\left[\delta(2t)\right] = \frac{1}{2}\cdot 1$$

$$F(\omega) = \frac{1}{3}\cdot 1 - \frac{1}{2}j\omega = \underline{\mathbf{\frac{1}{3} - \frac{j\omega}{2}}}$$

Chapter 18, Solution 16.

(a) Using duality properly

$$|t| \rightarrow \frac{-2}{\omega^2}$$

$$\frac{-2}{t^2} \rightarrow 2\pi|\omega|$$

or $$\frac{4}{t^2} \rightarrow -4\pi|\omega|$$

$$F(\omega) = F\left(\frac{4}{t^2}\right) = \underline{\mathbf{-4\pi|\omega|}}$$

(b) $$e^{-|a|t} \longrightarrow \frac{2a}{a^2+\omega^2}$$

$$\frac{2a}{a^2+t^2} \longrightarrow 2\pi e^{-a|\omega|}$$

$$\frac{8}{a^2+t^2} \longrightarrow 4\pi e^{-2|\omega|}$$

$$G(\omega) = F\left(\frac{8}{4+t^2}\right) = \underline{\mathbf{4\pi e^{-2|\omega|}}}$$

Chapter 18, Solution 17.

(a) Since $H(\omega) = F\left(\cos\omega_0 t\ f(t)\right) = \frac{1}{2}\left[F(\omega+\omega_0) + F(\omega-\omega_0)\right]$

where $F(\omega) = F\left[u(t)\right] = \pi\delta(\omega) + \frac{1}{j\omega}$, $\omega_0 = 2$

$$H(\omega) = \frac{1}{2}\left[\pi\delta(\omega+2) + \frac{1}{j(\omega+2)} + \pi\delta(\omega-2) + \frac{1}{j(\omega-2)}\right]$$

$$= \frac{\pi}{2}[\delta(\omega+2)+\delta(\omega-2)] - \frac{j}{2}\left[\frac{\omega+2+\omega-2}{(\omega+2)(\omega-2)}\right]$$

$$H(\omega) = \underline{\mathbf{\frac{\pi}{2}[\delta(\omega+2)+\delta(\omega-2)] - \frac{j\omega}{\omega^2-4}}}$$

(b) $G(\omega) = \mathcal{F}[\sin\omega_0 t\, f(t)] = \frac{j}{2}[F(\omega+\omega_0) - F(\omega-\omega_0)]$

where $F(\omega) = \mathcal{F}[u(t)] = \pi\delta(\omega) + \frac{1}{j\omega}$

$$G(\omega) = \frac{j}{2}\left[\pi\delta(\omega+10) + \frac{1}{j(\omega+10)} - \pi\delta(\omega-10) - \frac{1}{j(\omega-10)}\right]$$

$$= \frac{j\pi}{2}[\delta(\omega+10) - \delta(\omega-10)] + \frac{j}{2}\left[\frac{j}{\omega-10} - \frac{j}{\omega+10}\right]$$

$$= \underline{\mathbf{\frac{j\pi}{2}[\delta(\omega+10) - \delta(\omega-10)] - \frac{10}{\omega^2-100}}}$$

Chapter 18, Solution 18.

Let $f(t) = e^{-t}u(t) \longrightarrow F(\omega) = \frac{1}{j + j\omega}$

$$f(t)\cos t \longrightarrow \frac{1}{2}[F(\omega-1) + F(\omega+1)]$$

Hence $Y(\omega) = \frac{1}{2}\left[\frac{1}{1+j(\omega-1)} + \frac{1}{1+j(\omega+1)}\right]$

$$= \frac{1}{2}\left[\frac{1+j\omega+j+1+j\omega-j}{[1+j(\omega-1)][1+j(\omega+1)]}\right]$$

$$= \frac{1+j\omega}{1+j\omega+j+j\omega-j-\omega^2+1}$$

$$= \underline{\mathbf{\frac{1+j\omega}{2j\omega-\omega^2+2}}}$$

Chapter 18, Solution 19.

$$F(\omega) = \int_{-\infty}^{\infty} f(t)e^{j\omega t}\,dt = \frac{1}{2}\int_0^1 \left(e^{j2\pi t} + e^{-j2\pi t}\right)e^{-j\omega t}\,dt$$

$$F(\omega) = \frac{1}{2}\int_0^1 \left[e^{-j(\omega+2\pi)t} + e^{-j(\omega-2\pi)t}\right]dt$$

$$= \frac{1}{2}\left[\frac{1}{-j(\omega+2\pi)}e^{-j(\omega+2\pi)t} + \frac{1}{-j(\omega-2\pi)}e^{-j(\omega-2\pi)t}\right]_0^1$$

$$= -\frac{1}{2}\left[\frac{e^{-j(\omega+2\pi)}-1}{j(\omega+2\pi)} + \frac{e^{-j(\omega-2\pi)}-1}{j(\omega-2\pi)}\right]$$

But $\quad e^{j2\pi} = \cos 2\pi + j\sin 2\pi = 1 = e^{-j2\pi}$

$$F(\omega) = -\frac{1}{2}\left(\frac{e^{-j\omega}-1}{j}\right)\left(\frac{1}{\omega+2\pi} + \frac{1}{\omega-2\pi}\right)$$

$$= \underline{\boldsymbol{\frac{j\omega}{\omega^2-4\pi^2}\left(e^{-j\omega}-1\right)}}$$

Chapter 18, Solution 20.

(a) $\quad F(c_n) = c_n\delta(\omega)$

$$F\left(c_n e^{jn\omega_o t}\right) = c_n\delta(\omega - n\omega_o)$$

$$F\left(\sum_{n=-\infty}^{\infty} c_n e^{jn\omega_o t}\right) = \underline{\boldsymbol{\sum_{n=-\infty}^{\infty} c_n\delta(\omega - n\omega_o)}}$$

(b) $\quad T = 2\pi \longrightarrow \omega_o = \frac{2\pi}{T} = 1$

$$c_n = \frac{1}{T}\int_0^T f(t)e^{-jn\omega_o t}\,dt = \frac{1}{2\pi}\left(\int_0^{\pi} 1\cdot e^{-jnt}\,dt + 0\right)$$

$$= \frac{1}{2\pi}\left(-\frac{1}{jn} e^{jnt} \Big|_0^\pi \right) = \frac{j}{2\pi n}\left(e^{-jn\pi} - 1 \right)$$

But $e^{-jn\pi} = \cos n\pi + j\sin n\pi = \cos n\pi = (-1)^n$

$$c_n = \frac{j}{2n\pi}\left[(-1)^n - 1 \right] = \begin{cases} 0, & n=\text{even} \\ \frac{-j}{n\pi}, & n=\text{odd}, n\neq 0 \end{cases}$$

for n = 0

$$c_n = \frac{1}{2\pi}\int_0^\pi 1\,dt = \frac{1}{2}$$

Hence

$$f(t) = \frac{1}{2} - \sum_{\substack{n=-\infty \\ n\neq 0 \\ n=\text{odd}}}^{\infty} \frac{j}{n\pi} e^{jnt}$$

$$F(\omega) = \mathbf{\frac{1}{2}}\delta\omega - \sum_{\substack{n=-\infty \\ n\neq 0 \\ n=\text{odd}}}^{\infty} \frac{\mathbf{j}}{\mathbf{n}\pi}\delta(\omega - \mathbf{n})$$

Chapter 18, Solution 21.

Using Parseval's theorem,

$$\int_{-\infty}^{\infty} f^2(t)dt = \frac{1}{2\pi}\int_{-\infty}^{\infty} |F(\omega)|^2 \, d\omega$$

If f(t) = u(t+a) – u(t+a), then

$$\int_{-\infty}^{\infty} f^2(t)dt = \int_{-a}^{a} (1)^2 dt = 2a = \frac{1}{2\pi}\int_{-\infty}^{\infty} 4a^2 \left(\frac{\sin a\omega}{a\omega} \right)^2 d\omega$$

or

$$\int_{-\infty}^{\infty} \left(\frac{\sin a\omega}{a\omega} \right)^2 d\omega = \frac{4\pi a}{4a^2} = \frac{\pi}{a} \quad \text{as required.}$$

Chapter 18, Solution 22.

$$F\left[f(t)\sin\omega_o t\right] = \int_{-\infty}^{\infty} f(t)\frac{\left(e^{j\omega_o t} - e^{-j\omega_o t}\right)}{2j} e^{-j\omega t}\,dt$$

$$= \frac{1}{2j}\left[\int_{-\infty}^{\infty} f(t)e^{-j(\omega-\omega_o)t}\,dt - \int_{-\infty}^{\infty} e^{-j(\omega+\omega_o)t}\,dt\right]$$

$$= \underline{\mathbf{\frac{1}{2j}\left[F(\omega-\omega_o) - F(\omega+\omega_o)\right]}}$$

Chapter 18, Solution 23.

(a) f(3t) leads to $\frac{1}{3}\cdot\frac{10}{(2+j\omega/3)(5+j\omega/3)} = \frac{30}{(6+j\omega)(15+j\omega)}$

$$F\left[f(-3t)\right] = \underline{\mathbf{\frac{30}{(6-j\omega)(15-j\omega)}}}$$

(b) f(2t) ⟶ $\frac{1}{2}\cdot\frac{10}{(2+j\omega/2)(15+j\omega/2)} = \frac{20}{(4+j\omega)(10+j\omega)}$

f(2t-1) = f [2(t-1/2)] ⟶ $\underline{\mathbf{\frac{20e^{-j\omega/2}}{(4+j\omega)(10+j\omega)}}}$

(c) f(t) cos 2t ⟶ $\frac{1}{2}F(\omega+2) + \frac{1}{2}F(\omega+2)$

$$= \underline{\mathbf{\frac{5}{[2+j(\omega+2)][5+j(\omega+2)]} + \frac{5}{[2+j(\omega-2)[5+j(\omega-2)]]}}}$$

(d) $F\left[f'(t)\right] = j\omega F(\omega) = \frac{j\omega 10}{(2+j\omega)(5+j\omega)}$

(e) $\int_{-\infty}^{t} f(t)dt$ ⟶ $\frac{F(\omega)}{j(\omega)} + \pi F(0)\delta(\omega)$

$$= \frac{10}{j\omega(2+j\omega)(5+j\omega)} + \pi\delta(\omega)\frac{x10}{2x5}$$

$$= \underline{\mathbf{\frac{10}{j\omega(2+j\omega)(5+j\omega)} + \pi\delta(\omega)}}$$

Chapter 18, Solution 24.

(a) $X(\omega) = F(\omega) + \mathcal{F}[3]$

$$= \underline{\mathbf{6\pi\delta(\omega) + \frac{j}{\omega}\left(e^{-j\omega} - 1\right)}}$$

(b) $y(t) = f(t-2)$

$$Y(\omega) = e^{-j\omega 2}F(\omega) = \underline{\mathbf{\frac{je^{-j2\omega}}{\omega}\left(e^{-j\omega} - 1\right)}}$$

(c) If $h(t) = f'(t)$

$$H(\omega) = j\omega F(\omega) = j\omega\frac{j}{\omega}\left(e^{-j\omega} - 1\right) = \underline{\mathbf{1 - e^{-j\omega}}}$$

(d) $g(t) = 4f\left(\frac{2}{3}t\right) + 10f\left(\frac{5}{3}t\right)$, $G(\omega) = 4x\frac{3}{2}F\left(\frac{3}{2}\omega\right) + 10x\frac{3}{5}F\left(\frac{3}{5}\omega\right)$

$$= 6\cdot\frac{j}{\frac{3}{2}\omega}\left(e^{-j3\omega/2} - 1\right) + \frac{6j}{\frac{3}{5}\omega}\left(e^{-j3\omega/5} - 1\right)$$

$$= \underline{\mathbf{\frac{j4}{\omega}\left(e^{-j3\omega/2} - 1\right) + \frac{j10}{\omega}\left(e^{-j3\omega/5} - 1\right)}}$$

Chapter 18, Solution 25.

(a) $F(s) = \dfrac{10}{s(s+2)} = \dfrac{A}{s} + \dfrac{B}{s+2}, \quad s = j\omega$

$$A = \frac{10}{2} = 5, \;\; B = \frac{10}{-2} = -5$$

$$F(\omega) = \frac{5}{j\omega} - \frac{5}{j\omega + 2}$$

$$f(t) \;=\; \underline{\mathbf{\frac{5}{2}sgn(t) - 5e^{-2t}u(t)}}$$

(b) $F(\omega) = \dfrac{j\omega - 4}{(j\omega+1)(j\omega+2)} = \dfrac{A}{j\omega+1} + \dfrac{B}{j\omega+2}$

$$F(s) = \frac{s-4}{(s+1)(s+2)} = \frac{A}{s+1} + \frac{B}{s+2}, \quad s = j\omega$$

$$A = 5, \;\; B = 6$$

$$F(\omega) = \frac{-5}{1+j\omega} + \frac{6}{2+j\omega}$$

$$f(t) \;=\; \underline{\mathbf{\left(-5e^{-t} + 6e^{-2t}\right)u(t)}}$$

Chapter 18, Solution 26.

(a) $\underline{f(t) = e^{-(t-2)}u(t)}$

(b) $\underline{h(t) = te^{-4t}u(t)}$

(c) If $\quad x(t) = u(t+1) - u(t-1) \qquad \longrightarrow \qquad X(\omega) = 2\dfrac{\sin\omega}{\omega}$

By using duality property,

$$G(\omega) = 2u(\omega+1) - 2u(\omega-1) \quad \longrightarrow \quad \underline{g(t) = \frac{2\sin t}{\pi t}}$$

Chapter 18, Solution 27.

(a) Let $F(s) = \dfrac{100}{s(s+10)} = \dfrac{A}{s} + \dfrac{B}{s+10}, \quad s = j\omega$

$$A = \frac{100}{10} = 10, \; B = \frac{100}{-10} = -10$$

$$F(\omega) = \frac{10}{j\omega} - \frac{10}{j\omega+10}$$

f(t) = $\underline{\mathbf{5sgn(t) - 10e^{-10t}u(t)}}$

(b) $G(s) = \dfrac{10s}{(2-s)(3+s)} = \dfrac{A}{2-s} + \dfrac{B}{s+3}, \quad s = j\omega$

$$A = \frac{20}{5} = 4, \quad B = \frac{-30}{5} = -6$$

$$G(\omega) = \frac{4}{= -j\omega + 2} - \frac{6}{j\omega + 3}$$

g(t) = $\underline{\mathbf{4e^{2t}u(-t) - 6e^{-3t}u(t)}}$

(c) $H(\omega) = \dfrac{60}{(j\omega)^2 + j40\omega + 1300} = \dfrac{60}{(j\omega+20)^2 + 900}$

h(t) = $\underline{\mathbf{2e^{-20t}\,sin(30t)\,u(t)}}$

$$y(t) = \frac{1}{2\pi}\int_{-\infty}^{\infty} \frac{\delta(\omega)e^{j\omega t}d\omega}{(2+j\omega)(j\omega+1)} = \frac{1}{2}\pi \cdot \frac{1}{2} = \underline{\mathbf{\frac{1}{4}}}\pi$$

Chapter 18, Solution 28.

(a) $$f(t) = \frac{1}{2\pi}\int_{-\infty}^{\infty} F(\omega)e^{j\omega t}\, d\omega = \frac{1}{2\pi}\int_{-\infty}^{\infty} \frac{\pi\delta(\omega)\, e^{j\omega t}}{(5+j\omega)(2+j\omega)} d\omega$$

$$= \frac{1}{2}\,\frac{1}{(5)(2)} = \frac{1}{20} = \underline{\mathbf{0.05}}$$

(b) $$f(t) = \frac{1}{2\pi}\int_{-\infty}^{\infty} \frac{10\delta(\omega+2)}{j\omega(j\omega+1)} e^{j\omega t}\, d\omega = \frac{10}{2\pi}\frac{e^{-j2t}}{(-j2)(-j2+1)}$$

$$= \frac{j5}{2\pi}\frac{e^{-j2t}}{1-j2} = \underline{\frac{\mathbf{(-2+j)e^{-j2t}}}{\mathbf{2\pi}}}$$

(c) $$f(t) = \frac{1}{2\pi}\int_{-\infty}^{\infty} \frac{20\delta(\omega-1)e^{j\omega t}}{(2+j\omega)(3+5\omega)} d\omega = \frac{20}{2\pi}\frac{e^{jt}}{(2+j)(3+j)}$$

$$= \frac{20e^{jt}}{2\pi(5+5j)} = \underline{\frac{\mathbf{(1-j)e^{jt}}}{\mathbf{\pi}}}$$

(d) Let $$F(\omega) = \frac{5\pi\delta(\omega)}{(5+j\omega)} + \frac{5}{j\omega(5+j\omega)} = F_1(\omega) + F_2(\omega)$$

$$f_1(t) = \frac{1}{2\pi}\int_{-\infty}^{\infty} \frac{5\pi\delta(\omega)}{5+j\omega} e^{j\omega t}\, d\omega = \frac{5\pi}{2\pi}\cdot\frac{1}{5} = 0.5$$

$$F_2(s) = \frac{5}{s(5+s)} = \frac{A}{s} + \frac{B}{s+5}\ ,\ A = 1, B = -1$$

$$F_2(\omega) = \frac{1}{j\omega} - \frac{1}{j\omega+5}$$

$$f_2(t) = \frac{1}{2}\text{sgn}(t) - e^{-5t} = -\frac{1}{2} + u(t) - e^{5t}$$

$$f(t) = f_1(t) + f_2(t) = \underline{\mathbf{u(t) - e^{-5t}}}$$

Chapter 18, Solution 29.

(a) $f(t) = F^{-1}[\delta(\omega)] + F^{-1}\left[4\delta(\omega+3) + 4\delta(\omega-3)\right]$

$$= \frac{1}{2\pi} + \frac{4\cos 3t}{\pi} = \underline{\mathbf{\frac{1}{2\pi}\left(1 + 8\cos 3t\right)}}$$

(b) If $h(t) = u(t+2) - u(t-2)$

$$H(\omega) = \frac{2\sin 2\omega}{\omega}$$

$$G(\omega) = 4H(\omega) \longrightarrow \qquad g(t) = \frac{1}{2\pi}\cdot\frac{8\sin 2t}{t}$$

$$g(t) = \underline{\mathbf{\frac{4\sin 2t}{\pi t}}}$$

(c) Since
$\cos(at) \leftrightarrow \pi\delta(\omega+a) + \pi\delta(\omega-a)$
Using the reversal property,
$2\pi\cos 2\omega \leftrightarrow \pi\delta(t+2) + \pi\delta(t-2)$

or $F^{-1}\left[6\cos 2\omega\right] = \underline{\mathbf{3\delta(t+2) + 3\delta(t-2)}}$

Chapter 18, Solution 30.

(a) $y(t) = \mathrm{sgn}(t) \longrightarrow Y(\omega) = \frac{2}{j\omega}, \qquad X(\omega) = \frac{1}{a + j\omega}$

$$H(\omega) = \frac{Y(\omega)}{X(\omega)} = \frac{2(a+j\omega)}{j\omega} = 2 + \frac{2a}{j\omega} \longrightarrow \underline{h(t) = 2\delta(t) + a[u(t) - u(-t)]}$$

(b) $X(\omega) = \frac{1}{1+j\omega}, \qquad Y(\omega) = \frac{1}{2+j\omega}$

$$H(\omega) = \frac{1+j\omega}{2+j\omega} = 1 - \frac{1}{2+j\omega} \longrightarrow \underline{h(t) = \delta(t) - e^{-2t}u(t)}$$

(c) In this case, by definition, $\underline{h(t) = \quad y(t) = e^{-at}\sin bt\, u(t)}$

Chapter 18, Solution 31.

(a) $Y(\omega) = \dfrac{1}{(a+j\omega)^2}, \qquad H(\omega) = \dfrac{1}{a+j\omega}$

$$X(\omega) = \frac{Y(\omega)}{H(\omega)} = \frac{1}{a+j\omega} \longrightarrow \underline{x(t) = e^{-at}u(t)}$$

(b) By definition, $\underline{x(t) = y(t) = u(t+1) - u(t-1)}$

(c) $Y(\omega) = \dfrac{1}{(a+j\omega)}, \qquad H(\omega) = \dfrac{2}{j\omega}$

$$X(\omega) = \frac{Y(\omega)}{H(\omega)} = \frac{j\omega}{2(a+j\omega)} = \frac{1}{2} - \frac{a}{2(a+j\omega)} \longrightarrow \underline{x(t) = \frac{1}{2}\delta(t) - \frac{a}{2}e^{-at}u(t)}$$

Chapter 18, Solution 32.

(a) Since $\dfrac{e^{-j\omega}}{j\omega+1} \qquad e^{-(t-1)}u(t-1)$

and $F(-\omega) \longrightarrow f(-t)$

$$F_1(\omega) = \frac{e^{j\omega}}{-j\omega+1} \longrightarrow f_1(t) = e^{-(-t-1)}u(-t-1)$$

$f_1(t) = \underline{\mathbf{e^{(t+1)}u(-t-1)}}$

(b) From Section 17.3,

$$\frac{2}{t^2+1} \longrightarrow 2\pi e^{-|\omega|}$$

If $F_2(\omega) = 2e^{-|\omega|}$, then

$f_2(t) = \underline{\mathbf{\dfrac{2}{\pi(t^2+1)}}}$

(b) By partial fractions

$$F_3(\omega) = \frac{1}{(j\omega+1)^2(j\omega-1)^2} = \frac{\frac{1}{4}}{(j\omega+1)^2} + \frac{\frac{1}{4}}{(j\omega+1)} + \frac{\frac{1}{4}}{(j\omega-1)^2} - \frac{\frac{1}{4}}{j\omega-1}$$

Hence $f_3(t) = \frac{1}{4}\left(te^{-t} + e^{-t} + te^{t} - e^{t}\right)u(t)$

$= \underline{\mathbf{\frac{1}{4}(t+1)e^{-t}u(t) + \frac{1}{4}(t-1)e^{t}u(t)}}$

(d) $$f_4(t) = \frac{1}{2\pi}\int_{-\infty}^{\infty} F_1(\omega)e^{j\omega t}\,d\omega = \frac{1}{2\pi}\int_{-\infty}^{\infty} \frac{\delta(\omega)e^{j\omega t}}{1+j2\omega} = \underline{\mathbf{\frac{1}{2\pi}}}$$

Chapter 18, Solution 33.

(a) Let $x(t) = 2\sin \pi t[u(t+1) - u(t-1)]$

From Problem 17.9(b),

$$X(\omega) = \frac{4j\pi \sin \omega}{\pi^2 - \omega^2}$$

Applying duality property,

$$f(t) = \frac{1}{2\pi}X(-t) = \frac{2j\sin(-t)}{\pi^2 - t^2}$$

$$f(t) = \underline{\frac{2j\sin t}{t^2 - \pi^2}}$$

(b) $$F(\omega) = \frac{j}{\omega}(\cos 2\omega - j\sin 2\omega) - \frac{j}{\omega}(\cos\omega - j\sin\omega)$$

$$= \frac{j}{\omega}\left(e^{j2\omega} - e^{-j\omega}\right) = \frac{e^{-j\omega}}{j\omega} - \frac{e^{j2\omega}}{j\omega}$$

$$f(t) = \frac{1}{2}\text{sgn}(t-1) - \frac{1}{2}\text{sgn}(t-2)$$

But $\text{sgn}(t) = 2u(t) - 1$

$$f(t) = u(t-1) - \frac{1}{2} - u(t-2) + \frac{1}{2}$$

$$= \underline{\mathbf{u(t-1) - u(t-2)}}$$

Chapter 18, Solution 34.

First, we find G(ω) for g(t) shown below.

$$g(t) = 10[u(t+2) - u(t-2)] + 10[u(t+1) - u(t-1)]$$
$$g'(t) = 10[\delta(t+2) - \delta(t-2)] + 10[\delta(t+1) - \delta(t-1)]$$

The Fourier transform of each term gives

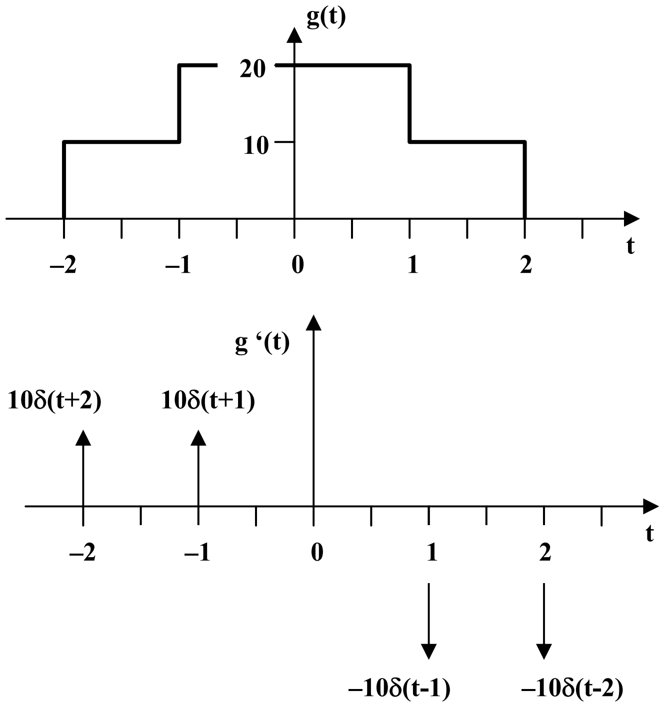

$$j\omega G(\omega) = 10\left(e^{j\omega 2} - e^{-j\omega 2}\right) + 10\left(e^{j\omega} - e^{-j\omega}\right)$$
$$= 20j\sin 2\omega + 20j\sin\omega$$

$$G(\omega) = \frac{20\sin 2\omega}{\omega} + \frac{20\sin\omega}{\omega} = 40\ \text{sinc}(2\omega) + 20\ \text{sinc}(\omega)$$

Note that G(ω) = G(-ω).

$$F(\omega) = 2\pi G(-\omega)$$

$$f(t) = \frac{1}{2\pi} G(t)$$

= **$(20/\pi)\text{sinc}(2t) + (10/\pi)\text{sinc}(t)$**

Chapter 18, Solution 35.

(a) x(t) = f[3(t-1/3)]. Using the scaling and time shifting properties,''

$$X(\omega) = \frac{1}{3}\frac{1}{2 + j\omega/3} e^{-j\omega/3} = \underline{\frac{e^{-j\omega/3}}{(6 + j\omega)}}$$

(b) Using the modulation property,

$$Y(\omega) = \frac{1}{2}[F(\omega+5) + F(\omega-5)] = \frac{1}{2}\left[\frac{1}{2 + j(\omega+5)} + \frac{1}{2 + j(\omega-5)}\right] = \underline{\frac{1}{2}\left[\frac{1}{j\omega+7} + \frac{1}{j\omega-3}\right]}$$

(c) $Z(\omega) = j\omega F(\omega) = \underline{\dfrac{j\omega}{2 + j\omega}}$

(d) $H(\omega) = F(\omega)F(\omega) = \underline{\dfrac{1}{(2 + j\omega)^2}}$

(e) $I(\omega) = j\dfrac{d}{d\omega}F(\omega) = j\dfrac{(0 - j)}{(2 + j\omega)^2} = \underline{\dfrac{1}{(2 + j\omega)^2}}$

Chapter 18, Solution 36.

$$H(\omega) = \frac{V_o(\omega)}{V_i(\omega)}$$

$$V_o(\omega) = H(\omega)V_i(\omega) = \frac{10V_i(\omega)}{2 + j\omega}$$

(a) $v_i = 4\delta(t)$ $\longrightarrow$ $V_i(\omega) = 4$

$$V_o(\omega) = \frac{40}{2 + j\omega}$$

$$v_o(t) = 40e^{-2t}u(t)$$

$v_o(2) = 40e^{-4} =$ **<u>0.7326 V</u>**

(b) $v_i = 6e^{-t}u(t)$ $\longrightarrow$ $V_i(\omega) = \dfrac{6}{1 + j\omega}$

$$V_o(\omega) = \frac{60}{(2 + j\omega)(1 + j\omega)}$$

$$V_o(s) = \frac{60}{(s+2)(s+1)} = \frac{A}{s+1} + \frac{B}{s+2}, \quad s = j\omega$$

$$A = \frac{60}{1} = 60, \quad B = \frac{60}{-1} = -60$$

$$V_o(\omega) = \frac{60}{1 + j\omega} - \frac{60}{2 + j\omega}$$

$$v_o(t) = 60\left[e^{-t} - e^{-2t}\right]u(t)$$

$$v_o(2) = 60\left[e^{-2} - e^{-4}\right] = 60(0.13533 - 0.01831)$$

$=$ **<u>7.021 V</u>**

(c) $v_i(t) = 3 \cos 2t$

$V_i(\omega) = \pi[\delta(\omega + 2) + \delta(\omega- 2)]$

$$V_o = \frac{10\pi[\delta(\omega+2) + \delta(\omega-2)]}{2 + j\omega}$$

$$v_o(t) = \frac{1}{2\pi}\int_{-\infty}^{\infty} V_o(\omega)e^{j\omega t}d\omega$$

$$= 5\int_{-\infty}^{\infty} \frac{\delta(\omega+2)}{2 + j\omega}e^{j\omega t}d\omega + 5\int_{-\infty}^{\infty} \frac{\delta(\omega-2)e^{j\omega t}}{2 + j\omega}d\omega$$

$$= \frac{5e^{-j2t}}{2-j2} + \frac{5e^{+j2t}}{2+j2} = \frac{5}{2\sqrt{2}}\left[e^{-j(2t-45°)} + e^{j(2t-45°)}\right]$$

$$= \frac{5}{\sqrt{2}}\cos(2t-45°)$$

$$v_o(2) = \frac{5}{\sqrt{2}}\cos(4-45°) = \frac{5}{\sqrt{2}}\cos(229.18°-45°)$$

$v_o(2)$ = **<u>–3.526 V</u>**

Chapter 18, Solution 37.

$$2\|j\omega = \frac{j2\omega}{2+j\omega}$$

By current division,

$$H(\omega) = \frac{I_o(\omega)}{I_s(\omega)} = \frac{\frac{j2\omega}{2+j\omega}}{4+\frac{j2\omega}{2+j\omega}} = \frac{j2\omega}{j2\omega+8+j4\omega}$$

$$H(\omega) = \underline{\mathbf{\frac{j\omega}{4+j3\omega}}}$$

Chapter 18, Solution 38.

$$V_i(\omega) = \pi\delta(\omega) + \frac{1}{j\omega}$$

$$V_o(\omega) = \frac{10}{10+j\omega 2}V_i(\omega) = \frac{5}{5+j\omega}\left(\pi\delta(\omega) + \frac{1}{j\omega}\right)$$

$$\text{Let } V_o(\omega) = V_1(\omega) + V_2(\omega) = \frac{5\pi\delta(\omega)}{5+j\omega} + \frac{5}{j\omega(5+j\omega)}$$

$$V_2(\omega) = \frac{5}{s(s+5)} = \frac{A}{s} + \frac{B}{s+5} \longrightarrow A = 1,\ B = -1, \quad s = j\omega$$

$$V_2(\omega) = \frac{1}{j\omega} - \frac{1}{5+j\omega} \longrightarrow v_2(t) = \frac{1}{2}\text{sgn}(t) - e^{-5t}$$

$$V_1 = \frac{5\pi\delta(\omega)}{5+j\omega} \longrightarrow v_1(t) = \frac{1}{2\pi}\int_{-\infty}^{\infty} \frac{5\pi\delta(\omega)}{5+j\omega} e^{j\omega t} d\omega$$

$$v_1(t) = \frac{5\pi}{2\pi}\cdot\frac{1}{5} = 0.5$$

$$v_0(t) = v_1(t) + v_2(t) = 0.5 + 0.5\,\text{sgn}(t) - e^{-5t}$$

But $\quad \text{sgn}(t) = -1 + 2u(t)$

$$v_o(t) = +0.5 - 0.5 + u(t) - e^{-5t}u(t) = \underline{\mathbf{u(t) - e^{-5t}u(t)}}$$

Chapter 18, Solution 39.

$$V_S(\omega) = \int_{-\infty}^{\infty}(1-t)e^{-j\omega t}dt = \frac{1}{j\omega} + \frac{1}{\omega^2} - \frac{1}{\omega^2}e^{-j\omega}$$

$$I(\omega) = \frac{V_S(\omega)}{10^3 + j\omega x10^{-3}} = \underline{\frac{10^3}{10^6 + j\omega}\left(\frac{1}{j\omega} + \frac{1}{\omega^2} - \frac{1}{\omega^2}e^{-j\omega}\right)}$$

Chapter 18, Solution 40.

$$\ddot{v}(t) = \delta(t) - 2\delta(t-1) + \delta(t-2)$$
$$-\omega^2 V(\omega) = 1 - 2e^{-j\omega} + e^{j\omega 2}$$

$$V(\omega) = \frac{1 - 2e^{-j\omega} + e^{-j\omega 2}}{-\omega^2}$$

Now $\quad Z(\omega) = 2 + \frac{1}{j\omega} = \frac{1 + j2\omega}{j\omega}$

$$I = \frac{V(\omega)}{Z(\omega)} = \frac{2e^{j\omega} - e^{j\omega 2} - 1}{\omega^2} \cdot \frac{j\omega}{1 + j2\omega}$$

$$= \frac{1}{j\omega(0.5 + j\omega)}\left(0.5 + 0.5e^{-j\omega 2} - e^{-j\omega}\right)$$

But $$\frac{1}{s(s+0.5)} = \frac{A}{s} + \frac{B}{s+0.5} \longrightarrow A = 2, B = -2$$

$$I(\omega) = \frac{2}{j\omega}\left(0.5 + 0.5e^{j\omega 2} - e^{-j\omega}\right) - \frac{2}{0.5 + j\omega}\left(0.5 + 0.5e^{-j\omega 2} - e^{-j\omega}\right)$$

$$i(t) = \underline{\mathbf{\frac{1}{2}sgn(t) + \frac{1}{2}sgn(t-2) - sgn(t-1) - e^{-0.5t}u(t) - e^{-0.5(t-2)}u(t-2) - 2e^{-0.5(t-1)}u(t-1)}}$$

Chapter 18, Solution 41.

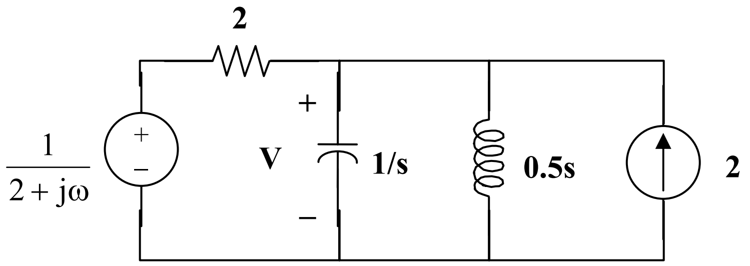

$$\frac{V - \frac{1}{2+j\omega}}{2} + j\omega V + \frac{2V}{j\omega} - 2 = 0$$

$$\left(j\omega - 2\omega^2 + 4\right)V = j4\omega + \frac{j\omega}{2 + j\omega} = \frac{-4\omega^2 + j9\omega}{2 + j\omega}$$

$$V(\omega) = \underline{\frac{2j\omega(4.5 + j2\omega)}{(2 + j\omega)(4 - 2\omega^2 + j\omega)}}$$

Chapter 18, Solution 42.

By current division, $I_o = \frac{2}{2+j\omega} \cdot I(\omega)$

(a) For i(t) = 5 sgn (t),

$$I(\omega) = \frac{10}{j\omega}$$

$$I_o = \frac{2}{2+j\omega} \cdot \frac{10}{j\omega} = \frac{20}{j\omega(2+j\omega)}$$

Let $I_o = \frac{20}{s(s+2)} = \frac{A}{s} + \frac{B}{s+2}$, $A = 10$, $B = -10$

$$I_o(\omega) = \frac{10}{j\omega} - \frac{10}{2+j\omega}$$

$i_o(t) = \underline{\mathbf{5\,sgn(t) - 10e^{-2t}u(t)A}}$

(b)

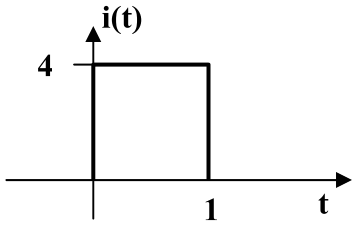

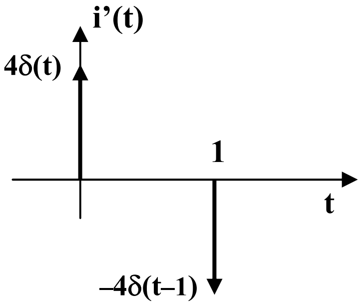

$$i'(t) = 4\delta(t) - 4\delta(t-1)$$
$$j\omega I(\omega) = 4 - 4e^{-j\omega}$$

$$I(\omega) = \frac{4\left(1 - e^{-j\omega}\right)}{j\omega}$$

$$I_o = \frac{8\left(1 - e^{-j\omega}\right)}{j\omega(2+j\omega)} = 4\left(\frac{1}{j\omega} - \frac{1}{2+j\omega}\right)\left(1 - e^{-j\omega}\right)$$

$$= \frac{4}{j\omega} - \frac{4}{2+j\omega} - \frac{4e^{-j\omega}}{j\omega} + \frac{4e^{-j\omega}}{2+j\omega}$$

$$i_o(t) = \underline{\mathbf{2\,sgn(t) - 2\,sgn(t-1) - 4e^{-2t}u(t) + 4e^{-2(t-1)}u(t-1)A}}$$

Chapter 18, Solution 43.

$$20\text{ mF} \longrightarrow \frac{1}{j\omega C} = \frac{1}{j20x10^{-3}\omega} = \frac{50}{j\omega}, \qquad i_s = 5e^{-t} \longrightarrow I_s = \frac{1}{5+j\omega}$$

$$V_o = \frac{40}{40+\frac{50}{j\omega}} I_s \bullet \frac{50}{j\omega} = \frac{50}{(s+1.25)(s+5)}, \qquad s = j\omega$$

$$V_o = \frac{A}{s+1.25} + \frac{B}{s+5} = \frac{40}{3}\left[\frac{1}{j\omega+1.25} - \frac{1}{j\omega+5}\right]$$

$$\underline{v_o(t) = \frac{40}{3}(e^{-1.25t} - e^{-5t})u(t)}$$

Chapter 18, Solution 44.

$$1\text{H} \longrightarrow j\omega$$

We transform the voltage source to a current source as shown in Fig. (a) and then combine the two parallel 2Ω resistors, as shown in Fig. (b).

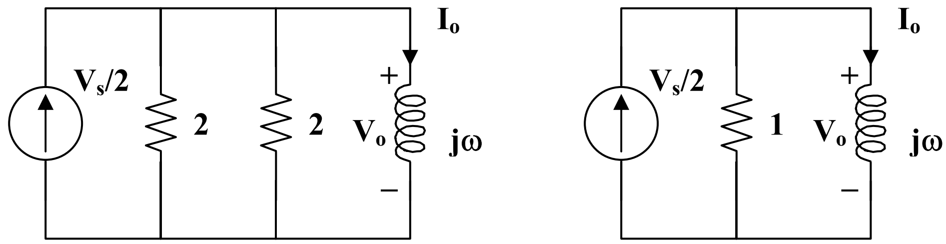

(a) **(b)**

$$2\|2 = 1\Omega, \quad I_o = \frac{1}{1+j\omega} \cdot \frac{V_s}{2}$$

$$V_o = j\omega I_o = \frac{j\omega V_s}{2(1+j\omega)}$$

$$\ddot{v}_s(t) = 10\delta(t) - 10\delta(t-2)$$
$$j\omega V_s(\omega) = 10 - 10e^{-j2\omega}$$

$$V_s(\omega) = \frac{10\left(1 - e^{-j2\omega}\right)}{j\omega}$$

Hence $V_o = \dfrac{5\left(1 - e^{-j2\omega}\right)}{1 + j\omega} = \dfrac{5}{1 + j\omega} - \dfrac{5}{1 + j\omega} e^{-j2\omega}$

$$v_o(t) = 5e^{-t}u(t) - 5e^{-(t-2)}u(t-2)$$
$$v_o(1) = 5e^{-1} - 1 - 0 = \underline{\mathbf{1.839\ V}}$$

Chapter 18, Solution 45.

$$V_o = \frac{\frac{1}{j\omega}}{2 + j\omega + \frac{1}{j\omega}}(2) = \frac{2}{(j\omega + 1)^2} \longrightarrow \underline{v_o(t) = 2te^{-t}u(t)}$$

Chapter 18, Solution 46.

$$\frac{1}{4}F \longrightarrow \frac{1}{j\omega\frac{1}{4}} = \frac{-j4}{\omega}$$

$$2H \longrightarrow j\omega 2$$
$$3\delta(t) \longrightarrow 3$$

$$e^{-t}u(t) \longrightarrow \frac{1}{1 + j\omega}$$

The circuit in the frequency domain is shown below:

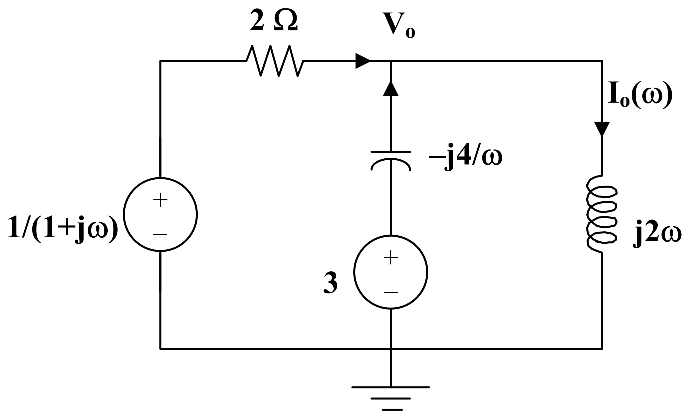

At node V_o, KCL gives

$$\frac{\frac{1}{1+j\omega} - V_o}{2} + \frac{3 - V_o}{\frac{-j4}{\omega}} = \frac{V_o}{j2\omega}$$

$$\frac{2}{1+j\omega} - 2V_o + j\omega 3 - j\omega V_o = -\frac{j2V_o}{\omega}$$

$$V_o = \frac{\frac{2}{1+j\omega} + j\omega 3}{2 + j\omega - \frac{j2}{\omega}}$$

$$I_o(\omega) = \frac{V_o}{j2\omega} = \frac{\frac{2 + j\omega 3 - 3\omega^2}{1+j\omega}}{j2\omega\left(2 + j\omega - \frac{j2}{\omega}\right)}$$

$$I_o(\omega) = \underline{\frac{\mathbf{2 + j\omega^2 - 3\omega^2}}{\mathbf{4 - 6\omega^2 + j(8\omega - 2\omega^3)}}}$$

Chapter 18, Solution 47.

Transferring the current source to a voltage source gives the circuit below:

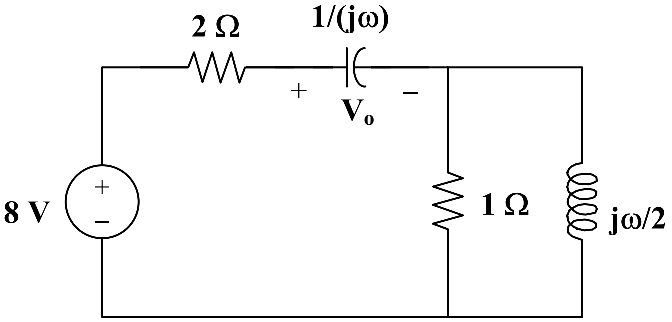

Let $Z_{in} = 2 + 1 \| \frac{j\omega}{2} = 2 + \frac{\frac{j\omega}{2}}{1 + \frac{j\omega}{2}} = \frac{4 + j3\omega}{2 + j\omega}$

By voltage division,

$$V_o(\omega) = \frac{\frac{1}{j\omega}}{\frac{1}{j\omega} + Z_{in}} \cdot 8 = \frac{8}{1 + j\omega Z_{in}} = \frac{8}{1 + \frac{j\omega(4 + j3\omega)}{2 + j\omega}}$$

$$= \frac{8(2 + j\omega)}{2 + j\omega + j\omega 4 - 3\omega^2}$$

$$= \underline{\mathbf{\frac{8(2 + j\omega)}{2 + j\omega 5 - 3\omega^2}}}$$

Chapter 18, Solution 48.

$$0.2F \longrightarrow \frac{1}{j\omega C} = -\frac{j5}{\omega}$$

As an integrator,

$$RC = 20 \, x \, 10^3 \, x \, 20 \, x \, 10^{-6} = 0.4$$

$$v_o = -\frac{1}{RC} \int_o^t v_i dt$$

$$V_o = -\frac{1}{RC}\left[\frac{V_i}{j\omega} + \pi V_i(0)\delta(\omega)\right]$$

$$= -\frac{1}{0.4}\left[\frac{2}{j\omega(2 + j\omega)} + \pi\delta(\omega)\right]$$

$$I_o = \frac{V_o}{20} mA = -0.125\left[\frac{2}{j\omega(2 + j\omega)} + \pi\delta(\omega)\right]$$

$$= -\frac{0.125}{j\omega} + \frac{0.125}{2 + j\omega} - 0.125\pi\delta(\omega)$$

$$i_o(t) = -0.125\,\text{sgn}(t) + 0.125e^{-2t}u(t) - \frac{0.125}{2\pi}\int \pi\delta(\omega)e^{j\omega t}dt$$

$$= 0.125 + 0.25u(t) + 0.125e^{-2t}u(t) - \frac{0.125}{2}$$

$i_o(t)$ = $\underline{\mathbf{0.625 - 0.25u(t) + 0.125e^{-2t}u(t)\,mA}}$

Chapter 18, Solution 49.

Consider the circuit shown below:

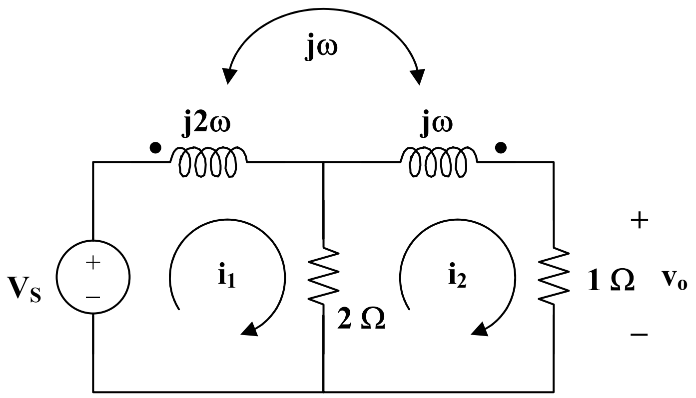

$$V_s = \pi[\delta(\omega+1) + \delta(\omega-2)]$$

For mesh 1, $-V_s + (2 + j2\omega)I_1 - 2I_2 - j\omega I_2 = 0$

$$V_s = 2(1 + j\omega)I_1 - (2 + j\omega)I_2 \qquad (1)$$

For mesh 2, $\quad 0 = (3 + j\omega)I_2 - 2I_1 - j\omega I_1$

$$I_1 = \frac{(3+\omega)I_2}{(2+\omega)} \qquad (2)$$

Substituting (2) into (1) gives

$$V_s = 2\frac{2(1+j\omega)(3+j\omega)I_2}{2+j\omega} - (2+j\omega)I_2$$

$$V_s(2+\omega) = [2(3 + j4\omega - \omega^2) - (4 + j4\omega - \omega^2)]I_2$$
$$= I_2(2 + j4\omega - \omega^2)$$

$$I_2 = \frac{(s+2)V_s}{s^2+4s+2}, \; s = j\omega$$

$$V_o = I_2 = \frac{(j\omega+2)\pi[\delta(\omega+1)+\delta(\omega-1)]}{(j\omega)^2 + j\omega 4 + 2}$$

$$v_o(t) = \frac{1}{2\pi}\int_{-\infty}^{\infty} v_o(\omega)e^{j\omega t}d\omega$$

$$= \int_{-\infty}^{\infty} \frac{\frac{1}{2}(j\omega+2)e^{j\omega t}\delta(\omega+1)d\omega}{(j\omega)^2 + j\omega 4 + 2} + \frac{\frac{1}{2}(j\omega+2)e^{j\omega t}\delta(\omega-1)d\omega}{(j\omega)^2 + j\omega 4 + 2}$$

$$= \frac{\frac{1}{2}(-j+2)e^{jt}}{-1-j4+2} + \frac{\frac{1}{2}(j+2)e^{jt}}{-1+j4+2}$$

$$v_o(t) = \frac{\frac{1}{2}(2-j)(1+j4)}{17}e^{jt} + \frac{\frac{1}{2}(2-j)(1-j4)e^{jt}}{17}$$

$$= \frac{1}{34}(6+j7)e^{jt} + \frac{1}{34}(6-j7)e^{jt}$$

$$= 0.271e^{-j(t-13.64°)} + 0.271e^{j(t-13.64°)}$$

$v_o(t) = \underline{\mathbf{0.542\cos(t - 13.64°)V}}$

Chapter 18, Solution 50.

Consider the circuit shown below:

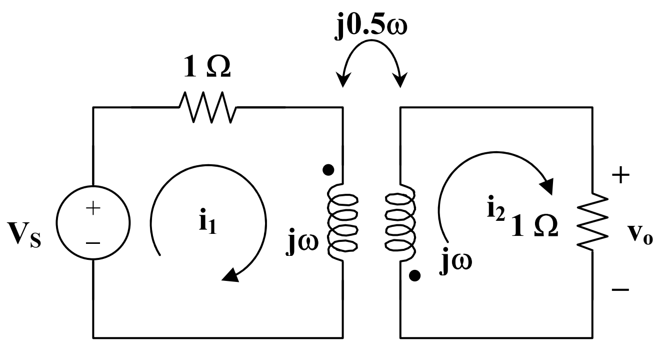

For loop 1,

$$-2+(1+j\omega)I_1 + j0.5\omega I_2 = 0 \qquad (1)$$

For loop 2,

$$(1+j\omega)I_2 + j0.5\omega I_1 = 0 \qquad (2)$$

From (2),

$$I_1 = \frac{(1+j\omega)I_2}{-j0.5\omega} = -2\frac{(1+j\omega)I_2}{j\omega}$$

Substituting this into (1),

$$2 = \frac{-2(1+j\omega)I_2}{j\omega} + \frac{j\omega}{2}I_2$$

$$2j\omega = -\left(4 + j4\omega - \frac{3}{2}\omega^2\right)I_2$$

$$I_2 = \frac{2j\omega}{4 + j4\omega - 1.5\omega^2}$$

$$V_o = I_2 = \frac{-2j\omega}{4 + j4\omega + 1.5(j\omega)^2}$$

$$V_o = \frac{\frac{4}{3}j\omega}{\frac{8}{3} + j\frac{8\omega}{3} + (j\omega)^2}$$

$$= \frac{-4\left(\frac{4}{3}+j\omega\right)}{\left(\frac{4}{3}+j\omega\right)^2 + \left(\frac{\sqrt{8}}{3}\right)^2} + \frac{\frac{16}{3}}{\left(\frac{4}{3}+j\omega\right)^2 + \left(\frac{\sqrt{8}}{3}\right)^2}$$

$$V_o(t) = \underline{\mathbf{-4e^{-4t/3}\cos\left(\frac{\sqrt{8}}{3}t\right)u(t) + 5.657e^{-4t/3}\sin\left(\frac{\sqrt{8}}{3}t\right)u(t)\,V}}$$

Chapter 18, Solution 51.

$$Z = 1 // \frac{1}{j\omega} = \frac{\frac{1}{j\omega}}{1+\frac{1}{j\omega}} = \frac{1}{1+j\omega}$$

$$V_o = \frac{Z}{Z+2}V_o = \frac{\frac{1}{1+j\omega}}{2+\frac{1}{1+j\omega}} * \frac{2}{1+j\omega} = \frac{1}{3+2j\omega}\frac{2}{1+j\omega}$$

$$= \frac{1}{(s+1)(s+1.5)}, \qquad s = j\omega$$

$$V_o = \frac{A}{s+1} + \frac{B}{s+1.5} = \frac{2}{s+1} - \frac{2}{s+1.5} \qquad \longrightarrow \qquad v_o(t) = 2(e^{-t} - e^{-1.5t})u(t)$$

$$W = \int_{-\infty}^{\infty} f^2(t)dt = 4\int_0^{\infty}(e^{-t} - e^{-1.5t})^2 dt$$

$$= 4\int_0^{\infty}(e^{-2t} - 2e^{-2.5t} + e^{-3t})dt = 4\left(\frac{e^{-2t}}{-2} + 2\frac{e^{-2.5t}}{2.5} - \frac{e^{-3t}}{3}\right)\Bigg|_0^{\infty}$$

$$W = 4(\frac{1}{2} - \frac{2}{2.5} + \frac{1}{3}) = \underline{0.1332\text{ J}}$$

Chapter 18, Solution 52.

$$J = 2\int_0^{\infty} f^2(t)\,dt = \frac{1}{\pi}\int_0^{\infty} |F(\omega)|^2\,d\omega$$

$$= \frac{1}{\pi}\int_0^{\infty} \frac{1}{9^2 + \omega^2}d\omega = \frac{1}{3\pi}\tan^{-1}(\omega/3)\Bigg|_0^{\infty} = \frac{1}{3\pi}\frac{\pi}{2} = \underline{\mathbf{(1/6)}}$$

Chapter 18, Solution 53.

$$J = \int_0^{\infty} |F(\omega)|^2 d\omega = 2\pi \int_{-\infty}^{\infty} f^2(t)\,dt$$

$$f(t) = \begin{vmatrix} e^{2t}, & t < 0 \\ e^{-2t}, & t > 0 \end{vmatrix}$$

$$J = 2\pi\left[\int_{-\infty}^{0} e^{4t}dt + \int_0^{\infty} e^{-4t}dt\right] = 2\pi\left[\frac{e^{4t}}{4}\bigg|_{-\infty}^{0} + \frac{e^{-4t}}{-4}\bigg|_0^{\infty}\right] = 2\pi[(1/4) + (1/4)] = \underline{\pi}$$

Chapter 18, Solution 54.

$$W_{1\Omega} = \int_{-\infty}^{\infty} f^2(t)\,dt = 16\int_0^{\infty} e^{-2t}dt = -8e^{-2t}\Big|_0^{\infty} = \underline{\mathbf{8\ J}}$$

Chapter 18, Solution 55.

$f(t) = 5e^2e^{-t}u(t)$

$F(\omega) = 5e^2/(1 + j\omega)$, $|F(\omega)|^2 = 25e^4/(1 + \omega^2)$

$$W_{1\Omega} = \frac{1}{\pi}\int_0^{\infty} |F(\omega)|^2 d\omega = \frac{25e^4}{\pi}\int_0^{\infty} \frac{1}{1+\omega^2} d\omega = \frac{25e^4}{\pi}\tan^{-1}(\omega)\Big|_0^{\infty}$$

$$= 12.5e^4 = \underline{\mathbf{682.5\ J}}$$

or $$W_{1\Omega} = \int_{-\infty}^{\infty} f^2(t)\,dt = 25e^4\int_0^{\infty} e^{-2t}dt = 12.5e^4 = \underline{\mathbf{682.5\ J}}$$

Chapter 18, Solution 56.

$$W_{1\Omega} = \int_{-\infty}^{\infty} f^2(t)\,dt = \int_0^{\infty} e^{-2t}\sin^2(2t)\,dt$$

But, $\sin^2(A) = 0.5(1 - \cos(2A))$

$$W_{1\Omega} = \int_0^{\infty} e^{-2t}\,0.5[1-\cos(4t)]dt = \frac{1}{2}\frac{e^{-2t}}{-2}\bigg|_0^{\infty} - \frac{e^{-2t}}{4+16}[-2\cos(4t)+4\sin(4t)]\bigg|_0^{\infty}$$

$$= (1/4) + (1/20)(-2) = \underline{\mathbf{0.15\ J}}$$

Chapter 18, Solution 57.

$$W_{1\Omega} = \int_{-\infty}^{\infty} i^2(t)\,dt = \int_{-\infty}^{0} 4e^{2t}dt = 2e^{2t}\Big|_{-\infty}^{0} = \underline{\mathbf{2\ J}}$$

or $\quad I(\omega) = 2/(1 - j\omega), \quad |I(\omega)|^2 = 4/(1 + \omega^2)$

$$W_{1\Omega} = \frac{1}{2\pi}\int_{-\infty}^{\infty}|I(\omega)|^2 d\omega = \frac{4}{2\pi}\int_{-\infty}^{\infty}\frac{1}{(1+\omega^2)}d\omega = \frac{4}{\pi}\tan^{-1}(\omega)\bigg|_0^{\infty} = \frac{4}{\pi}\frac{\pi}{2} = \underline{\mathbf{2\ J}}$$

In the frequency range, $-5 < \omega < 5$,

$$W = \frac{4}{\pi}\tan^{-1}\omega\bigg|_0^{5} = \frac{4}{\pi}\tan^{-1}(5) = \frac{4}{\pi}(1.373) = 1.7487$$

$W/ W_{1\Omega} = 1.7487/2 = 0.8743$ or $\underline{\mathbf{87.43\%}}$

Chapter 18, Solution 58.

$\omega_m = 200\pi = 2\pi f_m$ which leads to $f_m = 100$ Hz

(a) $\omega_c = \pi x 10^4 = 2\pi f_c$ which leads to $f_c = 10^4/2 =$ **<u>5 kHz</u>**

(b) lsb $= f_c - f_m = 5{,}000 - 100 =$ **<u>4,900 Hz</u>**

(c) usb $= f_c + f_m = 5{,}000 + 100 =$ **<u>5,100 Hz</u>**

Chapter 18, Solution 59.

$$H(\omega) = \frac{V_o(\omega)}{V_i(\omega)} = \frac{\dfrac{10}{2+j\omega} - \dfrac{6}{4+j\omega}}{2} = \frac{5}{2+j\omega} - \frac{3}{4+j\omega}$$

$$V_o(\omega) = H(\omega)V_i(\omega) = \left(\frac{5}{2+j\omega} - \frac{3}{4+j\omega}\right)\frac{4}{1+j\omega}$$

$$= \frac{20}{(s+1)(s+2)} - \frac{12}{(s+1)(s+4)}, \qquad s = j\omega$$

Using partial fraction,

$$V_o(\omega) = \frac{A}{s+1} + \frac{B}{s+2} + \frac{C}{s+1} + \frac{D}{s+4} = \frac{16}{1+j\omega} - \frac{20}{2+j\omega} + \frac{4}{4+j\omega}$$

Thus,

$$v_o(t) = \underline{\left(16e^{-t} - 20e^{-2t} + 4e^{-4t}\right)u(t)\ \text{V}}$$

Chapter 18, Solution 60.

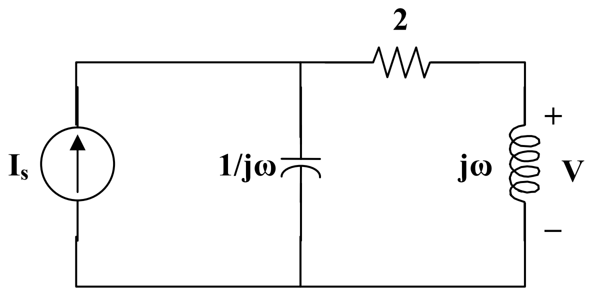

$$V = j\omega I_s \frac{\frac{1}{j\omega}}{\frac{1}{j\omega} + 2 + j\omega} = \frac{j\omega I_s}{1 - \omega^2 + j2\omega}$$

Since the voltage appears across the inductor, there is no DC component.

$$V_1 = \frac{2\pi\angle 90°8}{1 - 4\pi^2 + j4\pi} = \frac{50.27\angle 90°}{-38.48 + j12.566} = 1.2418\angle -71.92°$$

$$V_2 = \frac{4\pi\angle 90°5}{1 - 16\pi^2 + j8\pi} = \frac{62.83\angle 90°}{-156.91 + j25.13} = 0.3954\angle -80.9°$$

$$v(t) = \underline{1.2418\cos(2\pi t - 41.92°) + 0.3954\cos(4\pi t + 129.1°)\ \text{mV}}$$

Chapter 18, Solution 61.

lsb = 8,000,000 – 5,000 = **<u>7,995,000 Hz</u>**

usb = 8,000,000 + 5,000 = **<u>8,005,000 Hz</u>**

Chapter 18, Solution 62.

For the lower sideband, the frequencies range from

10,000 – 3,500 Hz = 6,500 Hz to 10,000 – 400 Hz = <u>9,600 Hz</u>

For the upper sideband, the frequencies range from

10,000 + 400 Hz = 10,400 Hz to 10,000 + 3,500 Hz = <u>13,500 Hz</u>

Chapter 18, Solution 63.

Since f_n = 5 kHz, $2f_n$ = 10 kHz

i.e. the stations must be spaced 10 kHz apart to avoid interference.

$$\Delta f = 1600 - 540 = 1060 \text{ kHz}$$

The number of stations = Δf /10 kHz = **<u>106 stations</u>**

Chapter 18, Solution 64.

Δf = 108 – 88 MHz = 20 MHz

The number of stations = 20 MHz/0.2 MHz = **<u>100 stations</u>**

Chapter 18, Solution 65.

ω = 3.4 kHz

$f_s = 2\omega$ = **<u>6.8 kHz</u>**

Chapter 18, Solution 66.

$\omega = 4.5$ MHz

$f_c = 2\omega = 9$ MHz

$T_s = 1/f_c = 1/(9x10^6) = 1.11x10^{-7} =$ **111 ns**

Chapter 18, Solution 67.

We first find the Fourier transform of g(t). We use the results of Example 17.2 in conjunction with the duality property. Let Arect(t) be a rectangular pulse of height A and width T as shown below.

Arect(t) transforms to Atsinc(ω^2/2)

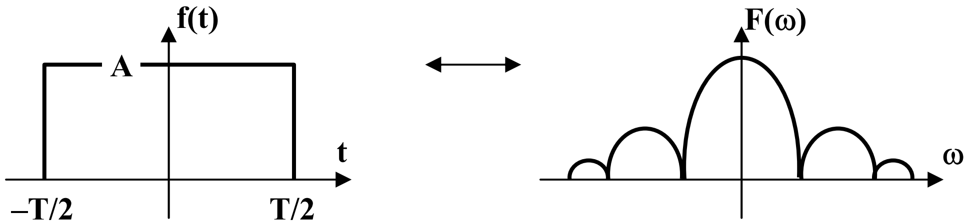

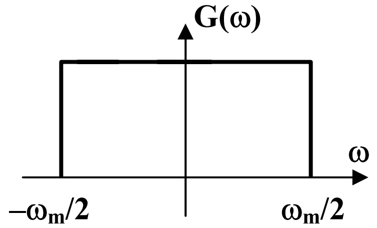

According to the duality property,

$A\tau sinc(\tau t/2)$ becomes $2\pi Arect(\tau)$

$g(t) = sinc(200\pi t)$ becomes $2\pi Arect(\tau)$

where $A\tau = 1$ and $\tau/2 = 200\pi$ or $T = 400\pi$

i.e. the upper frequency $\omega_u = 400\pi = 2\pi f_u$ or $f_u = 200$ Hz

The Nyquist rate $= f_s =$ **200 Hz**

The Nyquist interval $= 1/f_s = 1/200 =$ **5 ms**

Chapter 18, Solution 68.

The total energy is

$$W_T = \int_{-\infty}^{\infty} v^2(t)\,dt$$

Since v(t) is an even function,

$$W_T = \int_0^{\infty} 2500e^{-4t}dt = 5000\left.\frac{e^{-4t}}{-4}\right|_0^{\infty} = 1250 \text{ J}$$

$$V(\omega) = 50\text{x}4/(4+\omega^2)$$

$$W = \frac{1}{2\pi}\int_1^5 |V(\omega)|^2\, d\omega = \frac{1}{2\pi}\int_1^5 \frac{(200)^2}{(4+\omega^2)^2}d\omega$$

But $\displaystyle\int \frac{1}{(a^2+x^2)^2}dx = \frac{1}{2a^2}\left[\frac{x}{x^2+a^2}+\frac{1}{a}\tan^{-1}(x/a)\right]+C$

$$W = \frac{2\text{x}10^4}{\pi}\frac{1}{8}\left[\frac{\omega}{4+\omega^2}+\frac{1}{2}\tan^{-1}(\omega/2)\right]_1^5$$

$$= (2500/\pi)[(5/29) + 0.5\tan^{-1}(5/2) - (1/5) - 0.5\tan^{-1}(1/2) = 267.19$$

W/W_T = 267.19/1250 = 0.2137 or **21.37%**

Chapter 18, Solution 69.

The total energy is

$$W_T = \frac{1}{2\pi}\int_{-\infty}^{\infty}|F(\omega)|^2 d\omega = \frac{1}{2\pi}\int_{-\infty}^{\infty}\frac{400}{4^2+\omega^2}d\omega$$

$$= \frac{400}{\pi}\left[(1/4)\tan^{-1}(\omega/4)\right]_0^{\infty} = \frac{100}{\pi}\frac{\pi}{2} = 50$$

$$W = \frac{1}{2\pi}\int_0^2 |F(\omega)|^2 d\omega = \frac{400}{2\pi}\left[(1/4)\tan^{-1}(\omega/4)\right]_0^2$$

$$= [100/(2\pi)]\tan^{-1}(2) = (50/\pi)(1.107) = 17.6187$$

W/W_T = 17.6187/50 = 0.3524 or **35.24%**

Chapter 19, Solution 1.

To get $\mathbf{z}_{11}$ and $\mathbf{z}_{21}$, consider the circuit in Fig. (a).

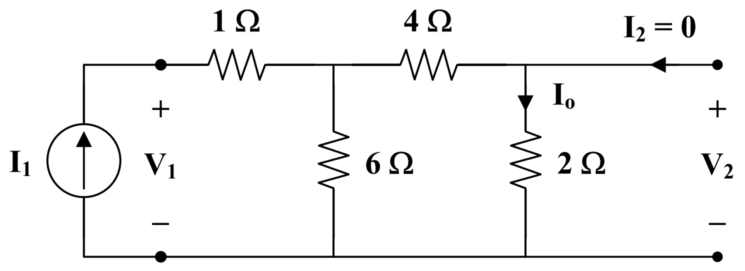

(a)

$$\mathbf{z}_{11} = \frac{\mathbf{V}_1}{\mathbf{I}_1} = 1 + 6 \,||\, (4+2) = 4\ \Omega$$

$$\mathbf{I}_o = \frac{1}{2}\mathbf{I}_1, \qquad \mathbf{V}_2 = 2\mathbf{I}_o = \mathbf{I}_1$$

$$\mathbf{z}_{21} = \frac{\mathbf{V}_2}{\mathbf{I}_1} = 1\ \Omega$$

To get $\mathbf{z}_{22}$ and $\mathbf{z}_{12}$, consider the circuit in Fig. (b).

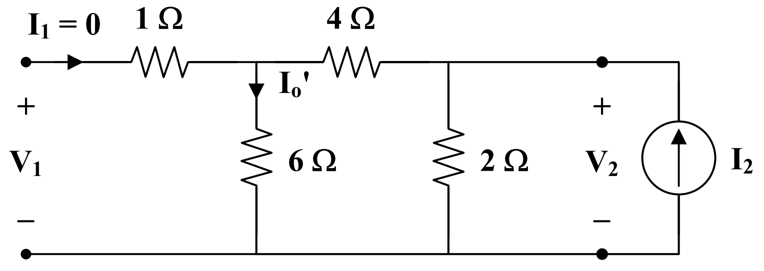

(b)

$$\mathbf{z}_{22} = \frac{\mathbf{V}_2}{\mathbf{I}_2} = 2 \,||\, (4+6) = 1.667\ \Omega$$

$$\mathbf{I}_o' = \frac{2}{2+10}\mathbf{I}_2 = \frac{1}{6}\mathbf{I}_2, \qquad \mathbf{V}_1 = 6\mathbf{I}_o' = \mathbf{I}_2$$

$$\mathbf{z}_{12} = \frac{\mathbf{V}_1}{\mathbf{I}_2} = 1\ \Omega$$

Hence,

$$[\mathbf{z}] = \begin{bmatrix} \mathbf{4} & \mathbf{1} \\ \mathbf{1} & \mathbf{1.667} \end{bmatrix}\Omega$$

Chapter 19, Solution 2.

Consider the circuit in Fig. (a) to get $\mathbf{z}_{11}$ and $\mathbf{z}_{21}$.

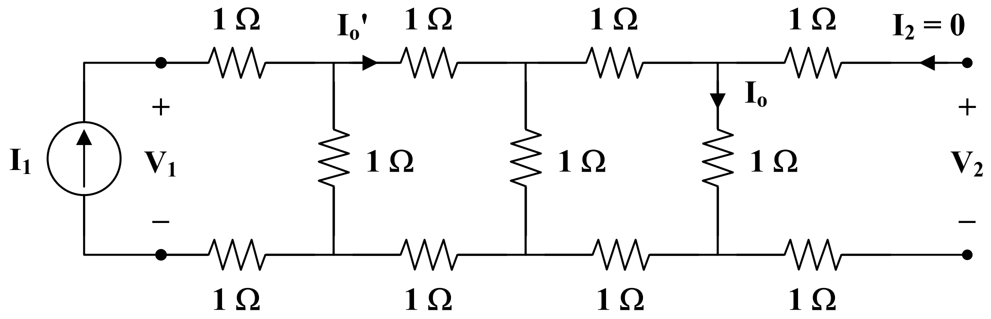

(a)

$$\mathbf{z}_{11} = \frac{\mathbf{V}_1}{\mathbf{I}_1} = 2 + 1 \,||\, [2 + 1 \,||\, (2+1)]$$

$$\mathbf{z}_{11} = 2 + 1 \,||\left(2 + \frac{3}{4}\right) = 2 + \frac{(1)(11/4)}{1 + 11/4} = 2 + \frac{11}{15} = 2.733$$

$$\mathbf{I}_o = \frac{1}{1+3}\mathbf{I}_o' = \frac{1}{4}\mathbf{I}_o'$$

$$\mathbf{I}_o' = \frac{1}{1 + 11/4}\mathbf{I}_1 = \frac{4}{15}\mathbf{I}_1$$

$$\mathbf{I}_o = \frac{1}{4}\cdot\frac{4}{15}\mathbf{I}_1 = \frac{1}{15}\mathbf{I}_1$$

$$\mathbf{V}_2 = \mathbf{I}_o = \frac{1}{15}\mathbf{I}_1$$

$$\mathbf{z}_{21} = \frac{\mathbf{V}_2}{\mathbf{I}_1} = \frac{1}{15} = \mathbf{z}_{12} = 0.06667$$

To get $\mathbf{z}_{22}$, consider the circuit in Fig. (b).

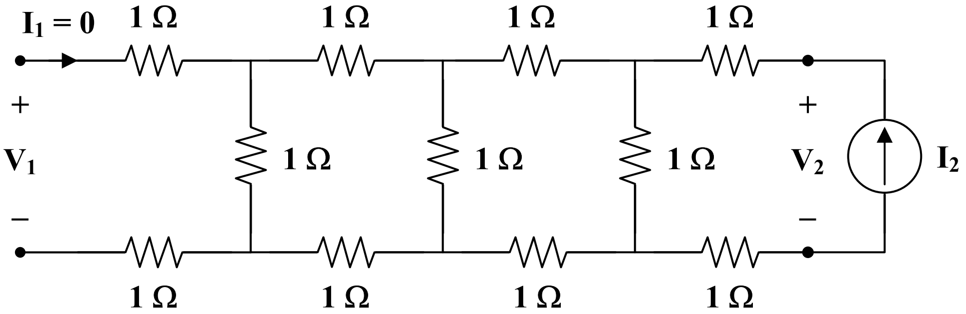

(b)

$$\mathbf{z}_{22} = \frac{\mathbf{V}_2}{\mathbf{I}_2} = 2 + 1 \,||\, (2 + 1 \,||\, 3) = \mathbf{z}_{11} = 2.733$$

Thus,

$$[\mathbf{z}] = \begin{bmatrix} \mathbf{2.733} & \mathbf{0.06667} \\ \mathbf{0.06667} & \mathbf{2.733} \end{bmatrix} \Omega$$

Chapter 19, Solution 3.

(a) To find $\mathbf{z}_{11}$ and $\mathbf{z}_{21}$, consider the circuit in Fig. (a).

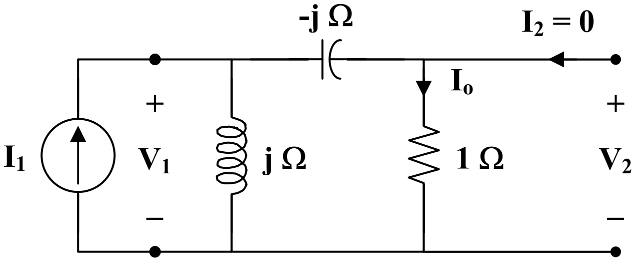

(a)

$$\mathbf{z}_{11} = \frac{\mathbf{V}_1}{\mathbf{I}_1} = j \,||\, (1 - j) = \frac{j(1 - j)}{j + 1 - j} = 1 + j$$

By current division,

$$\mathbf{I}_o = \frac{j}{j + 1 - j}\mathbf{I}_1 = j\mathbf{I}_1$$

$$\mathbf{V}_2 = \mathbf{I}_o = j\mathbf{I}_1$$

$$\mathbf{z}_{21} = \frac{\mathbf{V}_2}{\mathbf{I}_1} = j$$

To get $\mathbf{z}_{22}$ and $\mathbf{z}_{12}$, consider the circuit in Fig. (b).

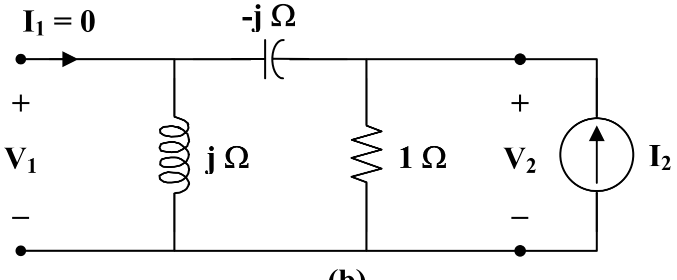

(b)

$$\mathbf{z}_{22} = \frac{\mathbf{V}_2}{\mathbf{I}_2} = 1 \,||\, (j - j) = 0$$

$$\mathbf{V}_1 = j\mathbf{I}_2$$

$$\mathbf{z}_{12} = \frac{\mathbf{V}_1}{\mathbf{I}_2} = j$$

Thus,

$$[\mathbf{z}] = \begin{bmatrix} \mathbf{1+j} & \mathbf{j} \\ \mathbf{j} & \mathbf{0} \end{bmatrix} \Omega$$

(b) To find $\mathbf{z}_{11}$ and $\mathbf{z}_{21}$, consider the circuit in Fig. (c).

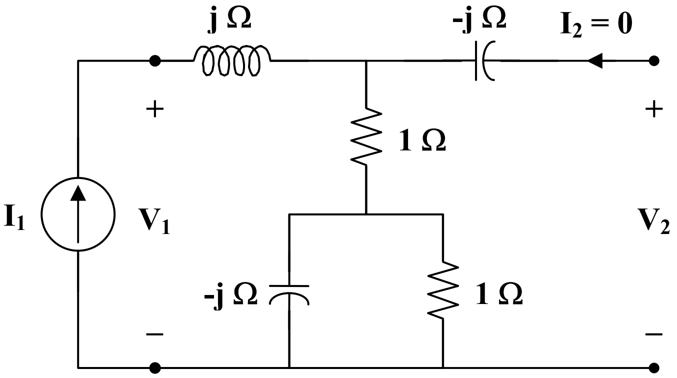

(c)

$$\mathbf{z}_{11} = \frac{\mathbf{V}_1}{\mathbf{I}_1} = \text{j} + 1 + 1 \,||\, (\text{-j}) = 1 + \text{j} + \frac{\text{- j}}{1 - \text{j}} = 1.5 + \text{j}0.5$$

$$\mathbf{V}_2 = (1.5 - \text{j}0.5)\,\mathbf{I}_1$$

$$\mathbf{z}_{21} = \frac{\mathbf{V}_2}{\mathbf{I}_1} = 1.5 - \text{j}0.5$$

To get $\mathbf{z}_{22}$ and $\mathbf{z}_{12}$, consider the circuit in Fig. (d).

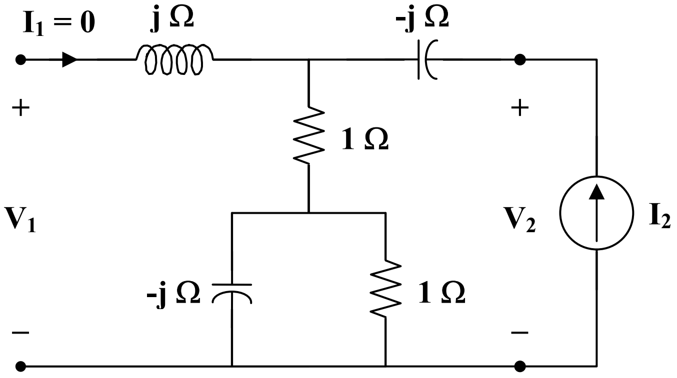

(d)

$$\mathbf{z}_{22} = \frac{\mathbf{V}_2}{\mathbf{I}_2} = \text{-j} + 1 + 1 \,||\, (\text{-j}) = 1.5 \text{ - j}1.5$$

$$\mathbf{V}_1 = (1.5 - \text{j}0.5)\,\mathbf{I}_2$$

$$\mathbf{z}_{12} = \frac{\mathbf{V}_1}{\mathbf{I}_2} = 1.5 - \text{j}0.5$$

Thus,

$$[\mathbf{z}] = \underline{\begin{bmatrix} \mathbf{1.5 + j0.5} & \mathbf{1.5 - j0.5} \\ \mathbf{1.5 - j0.5} & \mathbf{1.5 - j1.5} \end{bmatrix} \Omega}$$

Chapter 19, Solution 4.

Transform the Π network to a T network.

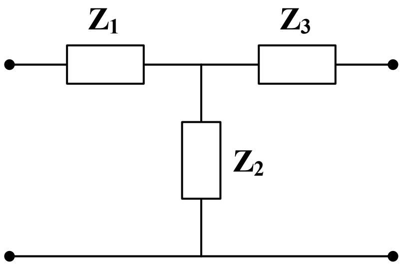

$$\mathbf{Z}_1 = \frac{(12)(j10)}{12 + j10 - j5} = \frac{j120}{12 + j5}$$

$$\mathbf{Z}_2 = \frac{-\,j60}{12 + j5}$$

$$\mathbf{Z}_3 = \frac{50}{12 + j5}$$

The z parameters are

$$\mathbf{z}_{12} = \mathbf{z}_{21} = \mathbf{Z}_2 = \frac{(-j60)(12 - j5)}{144 + 25} = -1.775 - j4.26$$

$$\mathbf{z}_{11} = \mathbf{Z}_1 + \mathbf{z}_{12} = \frac{(j120)(12 - j5)}{169} + \mathbf{z}_{12} = 1.775 + j4.26$$

$$\mathbf{z}_{22} = \mathbf{Z}_3 + \mathbf{z}_{21} = \frac{(50)(12 - j5)}{169} + \mathbf{z}_{21} = 1.7758 - j5.739$$

Thus,

$$[\mathbf{z}] = \underline{\begin{bmatrix} \mathbf{1.775 + j4.26} & \mathbf{-1.775 - j4.26} \\ \mathbf{-1.775 - j4.26} & \mathbf{1.775 - j5.739} \end{bmatrix} \Omega}$$

Chapter 19, Solution 5.

Consider the circuit in Fig. (a).

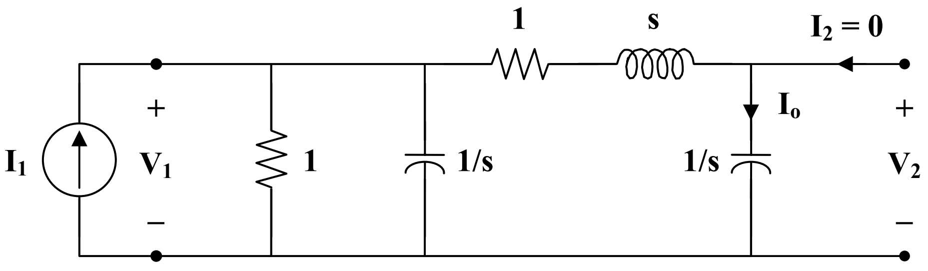

(a)

$$\mathbf{z}_{11} = 1 \,||\, \frac{1}{s} \,||\, \left(1 + s + \frac{1}{s}\right) = \frac{\frac{1}{s}}{1 + \frac{1}{s}} \,||\, \left(1 + s + \frac{1}{s}\right) = \frac{\left(\frac{1}{s+1}\right)\left(1 + s + \frac{1}{s}\right)}{\left(\frac{1}{s+1}\right) + 1 + s + \frac{1}{s}}$$

$$\mathbf{z}_{11} = \frac{s^2+s+1}{s^3+2s^2+3s+1}$$

$$\mathbf{I}_o = \frac{1 \| \frac{1}{s}}{1 \| \frac{1}{s} + 1 + s + \frac{1}{s}} \mathbf{I}_1 = \frac{\frac{1}{s+1}}{\frac{1}{s+1} + 1 + s + \frac{1}{s}} \mathbf{I}_1 = \frac{\frac{s}{s+1}}{\frac{s}{s+1} + s^2 + s + 1} \mathbf{I}_1$$

$$\mathbf{I}_o = \frac{s}{s^3+2s^2+3s+1} \mathbf{I}_1$$

$$\mathbf{V}_2 = \frac{1}{s} \mathbf{I}_o = \frac{\mathbf{I}_1}{s^3+2s^2+3s+1}$$

$$\mathbf{z}_{21} = \frac{\mathbf{V}_2}{\mathbf{I}_1} = \frac{1}{s^3+2s^2+3s+1}$$

Consider the circuit in Fig. (b).

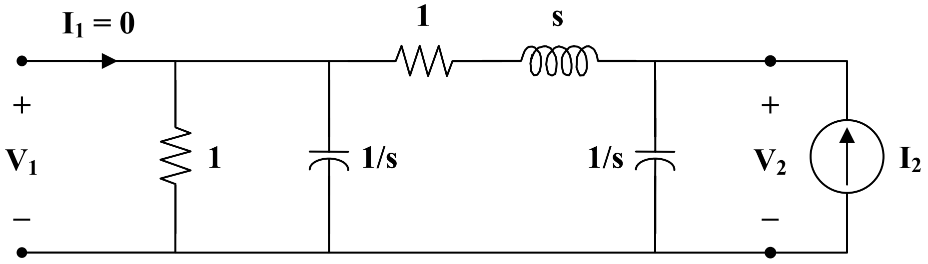

(b)

$$\mathbf{z}_{22} = \frac{\mathbf{V}_2}{\mathbf{I}_2} = \frac{1}{s} \| \left(1 + s + 1 \| \frac{1}{s}\right) = \frac{1}{s} \| \left(1 + s + \frac{1}{s+1}\right)$$

$$\mathbf{z}_{22} = \frac{\left(\frac{1}{s}\right)\left(1 + s + \frac{1}{s+1}\right)}{\frac{1}{s} + 1 + s + \frac{1}{s+1}} = \frac{1 + s + \frac{1}{s+1}}{1 + s + s^2 + \frac{s}{s+1}}$$

$$\mathbf{z}_{22} = \frac{s^2+2s+2}{s^3+2s^2+3s+1}$$

$$\mathbf{z}_{12} = \mathbf{z}_{21}$$

Hence,

$$[\mathbf{z}] = \begin{bmatrix} \dfrac{s^2+s+1}{s^3+2s^2+3s+1} & \dfrac{1}{s^3+2s^2+3s+1} \\ \dfrac{1}{s^3+2s^2+3s+1} & \dfrac{s^2+2s+2}{s^3+2s^2+3s+1} \end{bmatrix}$$

Chapter 19, Solution 6.

To find $\mathbf{z}_{11}$ and $\mathbf{z}_{21}$, connect a voltage source $\mathbf{V}_1$ to the input and leave the output open as in Fig. (a).

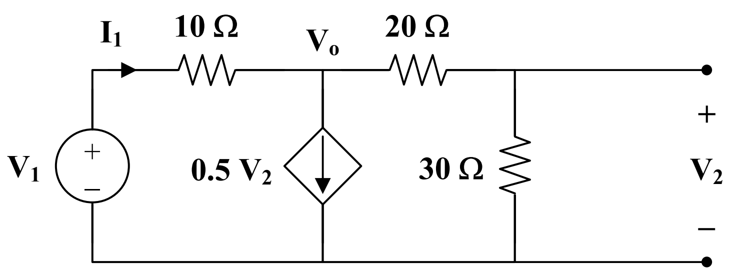

(a)

$$\frac{\mathbf{V}_1-\mathbf{V}_o}{10} = 0.5\mathbf{V}_2 + \frac{\mathbf{V}_o}{50}, \qquad \text{where} \quad \mathbf{V}_2 = \frac{30}{20+30}\mathbf{V}_o = \frac{3}{5}\mathbf{V}_o$$

$$\mathbf{V}_1 = \mathbf{V}_o + 5\left(\frac{3}{5}\mathbf{V}_o\right) + \frac{\mathbf{V}_o}{5} = 4.2\,\mathbf{V}_o$$

$$\mathbf{I}_1 = \frac{\mathbf{V}_1-\mathbf{V}_o}{10} = \frac{3.2}{10}\mathbf{V}_o = 0.32\,\mathbf{V}_o$$

$$\mathbf{z}_{11} = \frac{\mathbf{V}_1}{\mathbf{I}_1} = \frac{4.2\,\mathbf{V}_o}{0.32\,\mathbf{V}_o} = 13.125\,\Omega$$

$$\mathbf{z}_{21} = \frac{\mathbf{V}_2}{\mathbf{I}_1} = \frac{0.6\,\mathbf{V}_o}{0.32\,\mathbf{V}_o} = 1.875\,\Omega$$

To obtain $\mathbf{z}_{22}$ and $\mathbf{z}_{12}$, use the circuit in Fig. (b).

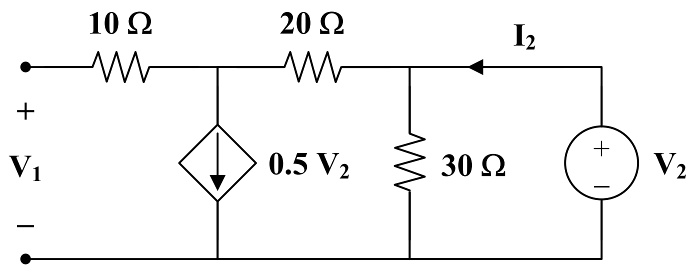

(b)

$$\mathbf{I}_2 = 0.5\mathbf{V}_2 + \frac{\mathbf{V}_2}{30} = 0.5333\mathbf{V}_2$$

$$\mathbf{z}_{22} = \frac{\mathbf{V}_2}{\mathbf{I}_2} = \frac{1}{0.5333} = 1.875\,\Omega$$

$$\mathbf{V}_1 = \mathbf{V}_2 - (20)(0.5\mathbf{V}_2) = -9\mathbf{V}_2$$

$$\mathbf{z}_{12} = \frac{\mathbf{V}_1}{\mathbf{I}_2} = \frac{-9\mathbf{V}_2}{0.5333\mathbf{V}_2} = -16.875\,\Omega$$

Thus,

$$[\mathbf{z}] = \begin{bmatrix} \mathbf{13.125} & \mathbf{-16.875} \\ \mathbf{1.875} & \mathbf{1.875} \end{bmatrix}\Omega$$

Chapter 19, Solution 7.

To get z_{11} and z_{21}, we consider the circuit below.

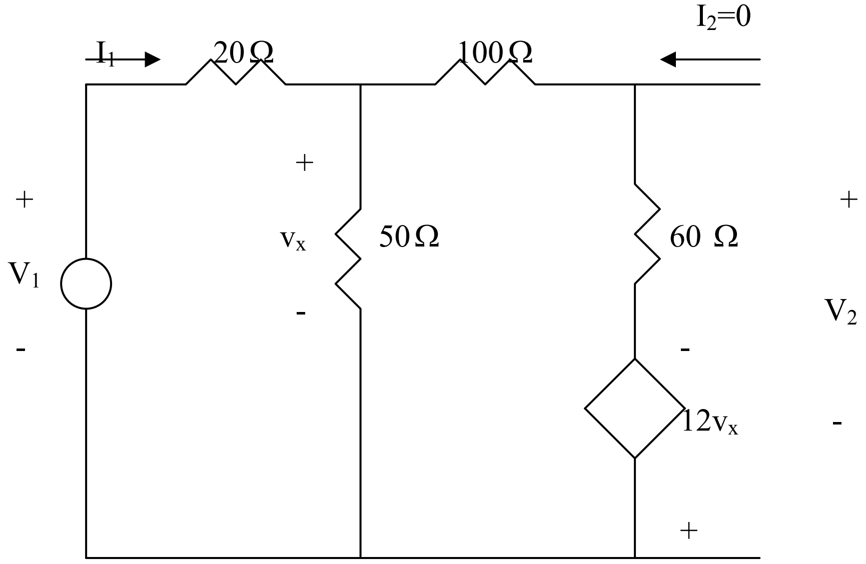

$$\frac{V_1 - V_x}{20} = \frac{V_x}{50} + \frac{V_x + 12V_x}{160} \longrightarrow V_x = \frac{40}{121}V_1$$

$$I_1 = \frac{V_1 - V_x}{20} = \frac{81}{121}(\frac{V_1}{20}) \longrightarrow z_{11} = \frac{V_1}{I_1} = 29.88$$

$$V_2 = 60(\frac{13V_x}{160}) - 12V_x = -\frac{57}{8}V_x = -\frac{57}{8}(\frac{40}{121})V_1 = -\frac{57}{8}(\frac{40}{121})\frac{20x121}{81}I_1$$

$$= -70.37I_1 \longrightarrow \quad z_{21} = \frac{V_2}{I_1} = -70.37$$

To get z_{12} and z_{22}, we consider the circuit below.

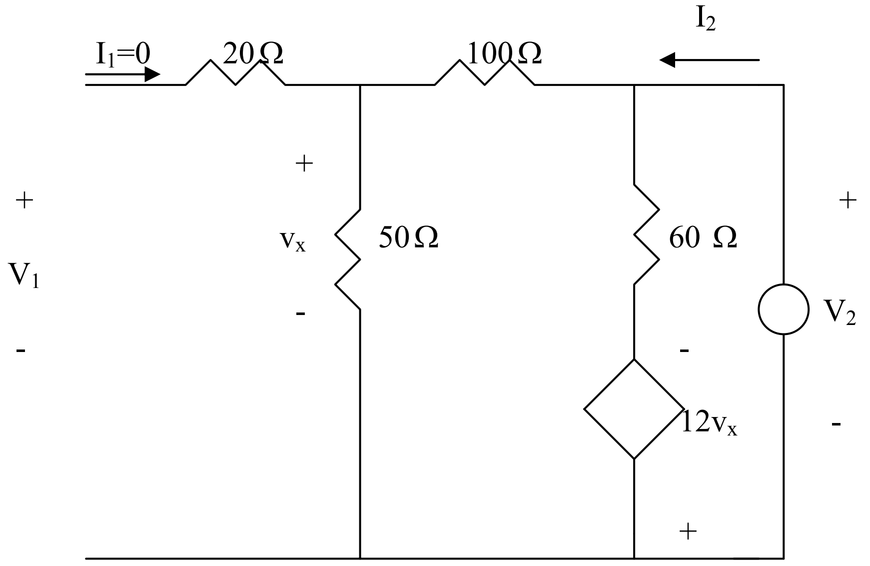

$$V_x = \frac{50}{100+50}V_2 = \frac{1}{3}V_2, \qquad I_2 = \frac{V_2}{150} + \frac{V_2 + 12V_x}{60} = 0.09V_2$$

$$z_{22} = \frac{V_2}{I_2} = 1/0.09 = 11.11$$

$$V_1 = V_x = \frac{1}{3}V_2 = \frac{11.11}{3}I_2 = 3.704I_2 \quad \longrightarrow \quad z_{12} = \frac{V_1}{I_2} = 3.704$$

Thus,

$$[z] = \begin{bmatrix} 29.88 & 3.704 \\ -70.37 & 11.11 \end{bmatrix}\Omega$$

Chapter 19, Solution 8.

To get z_{11} and z_{21}, consider the circuit below.

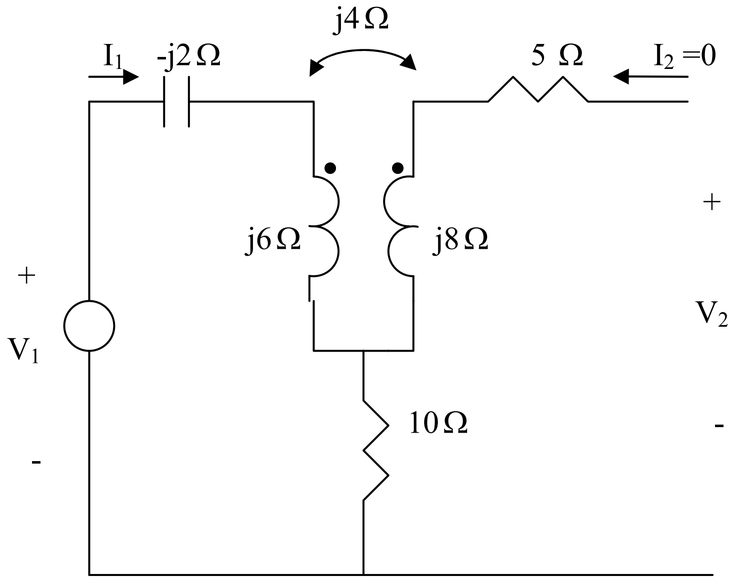

$$V_1 = (10 - j2 + j6)I_1 \longrightarrow z_{11} = \frac{V_1}{I_1} = 10 + j4$$

$$V_2 = -10I_1 - j4I_1 \longrightarrow z_{21} = \frac{V_2}{I_1} = -(10 + j4)$$

To get z_{22} and z_{12}, consider the circuit below.

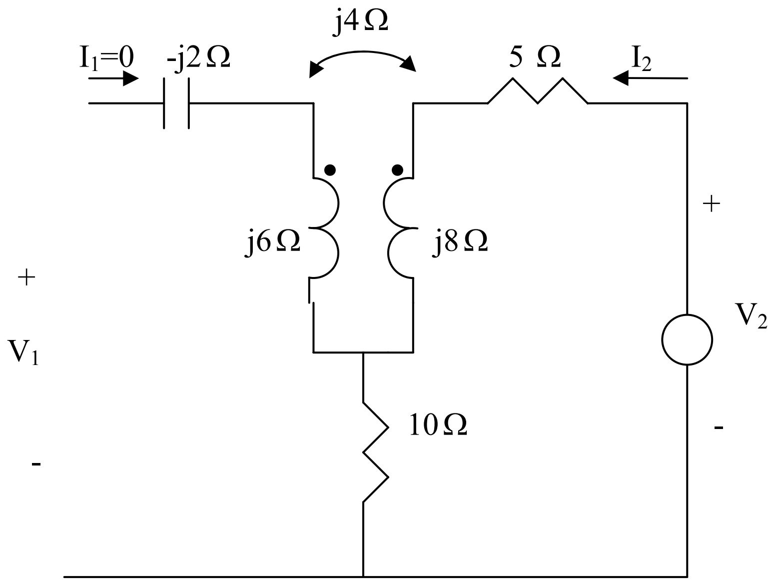

$$V_2 = (5 + 10 + j8)I_2 \longrightarrow z_{22} = \frac{V_2}{I_2} = 15 + j8$$

$$V_1 = -(10 + j4)I_2 \longrightarrow z_{12} = \frac{V_1}{I_2} = -(10 + j4)$$

Thus,

$$[z] = \begin{bmatrix} (10 + j4) & -(10 + j4) \\ -(10 + j4) & (15 + j8) \end{bmatrix} \Omega$$

Chapter 19, Solution 9.

It is evident from Fig. 19.5 that **a T network is appropriate for realizing the z parameters**.

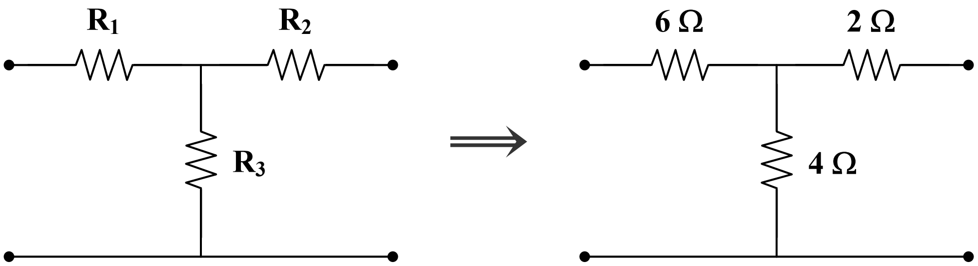

$$R_1 = \mathbf{z}_{11} - \mathbf{z}_{12} = 10 - 4 = \underline{\mathbf{6\,\Omega}}$$
$$R_2 = \mathbf{z}_{22} - \mathbf{z}_{12} = 6 - 4 = \underline{\mathbf{2\,\Omega}}$$
$$R_3 = \mathbf{z}_{12} = \mathbf{z}_{21} = \underline{\mathbf{4\,\Omega}}$$

Chapter 19, Solution 10.

(a) This is a non-reciprocal circuit so that **the two-port looks like the one shown in Figs. (a) and (b)**.

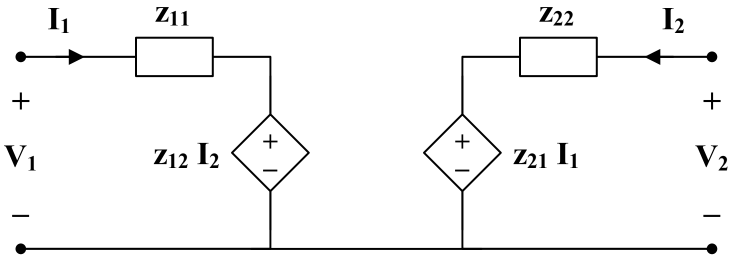

(a)

(b) This is a reciprocal network and **<u>the two-port look like the one shown in Figs. (c) and (d)</u>**.

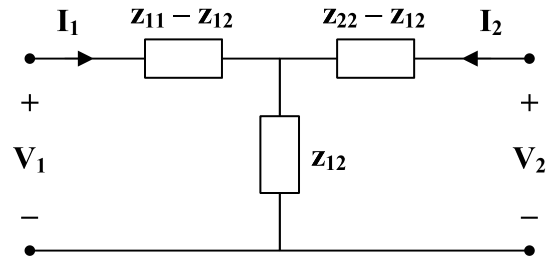

(c)

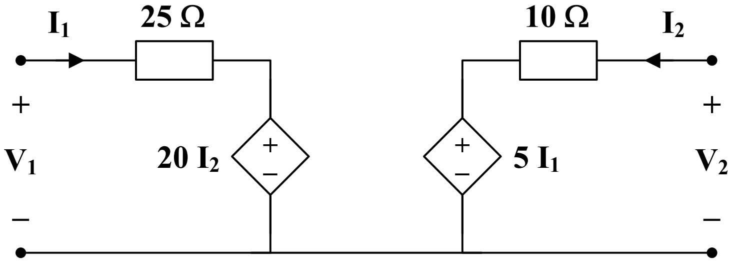

(b)

$$\mathbf{z}_{11} - \mathbf{z}_{12} = 1 + \frac{2}{s} = 1 + \frac{1}{0.5s}$$

$$\mathbf{z}_{22} - \mathbf{z}_{12} = 2s$$

$$\mathbf{z}_{12} = \frac{1}{s}$$

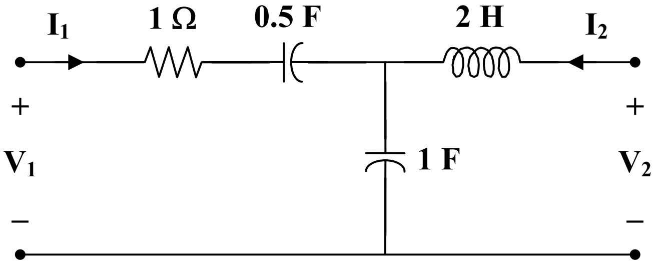

(d)

Chapter 19, Solution 11.

This is a reciprocal network, as shown below.

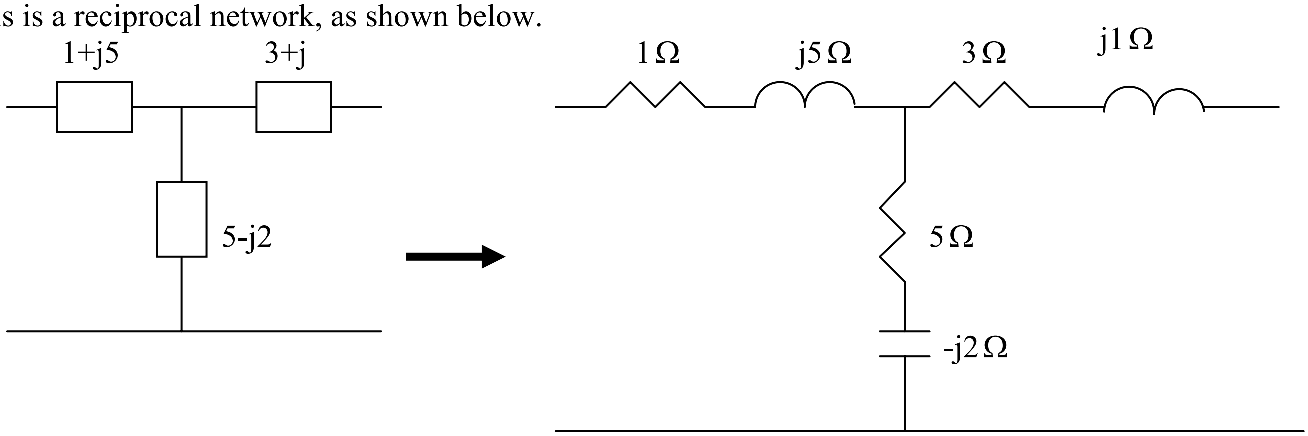

Chapter 19, Solution 12.

This is a reciprocal two-port so that it can be represented by the circuit in Figs. (a) and (b).

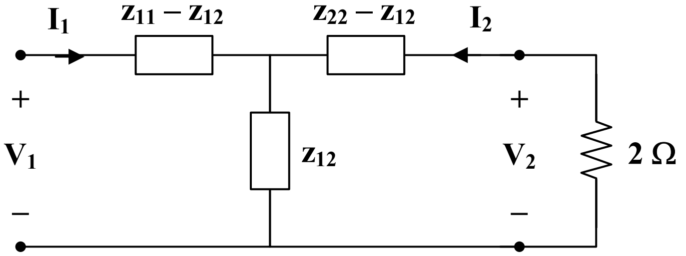

(a)

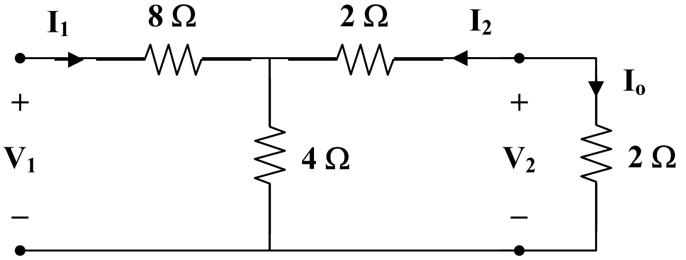

(b)

From Fig. (b),

$$\mathbf{V}_1 = (8 + 4 \parallel 4)\mathbf{I}_1 = 10\mathbf{I}_1$$

By current division,

$$\mathbf{I}_o = \frac{1}{2}\mathbf{I}_1, \qquad \mathbf{V}_2 = 2\mathbf{I}_o = \mathbf{I}_1$$

$$\frac{\mathbf{V}_2}{\mathbf{V}_1} = \frac{\mathbf{I}_1}{10\mathbf{I}_1} = \underline{\mathbf{0.1}}$$

Chapter 19, Solution 13.

This is a reciprocal two-port so that the circuit can be represented by the circuit below.

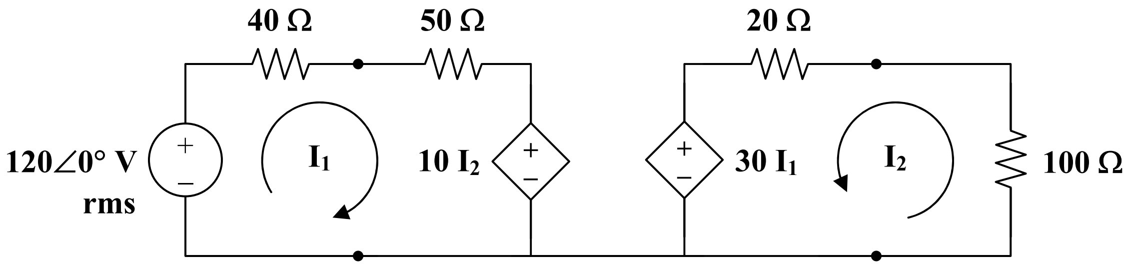

We apply mesh analysis.
For mesh 1,

$$-120 + 90\mathbf{I}_1 + 10\mathbf{I}_2 = 0 \longrightarrow 12 = 9\mathbf{I}_1 + \mathbf{I}_2 \qquad (1)$$

For mesh 2,

$$30\mathbf{I}_1 + 120\mathbf{I}_2 = 0 \longrightarrow \mathbf{I}_1 = -4\mathbf{I}_2 \qquad (2)$$

Substituting (2) into (1),

$$12 = -36\mathbf{I}_2 + \mathbf{I}_2 = -35\mathbf{I}_2 \longrightarrow \mathbf{I}_2 = \frac{-12}{35}$$

$$P = \frac{1}{2}|\mathbf{I}_2|^2 R = \frac{1}{2}\left(\frac{12}{35}\right)^2 (100) = \underline{\mathbf{5.877\ W}}$$

Chapter 19, Solution 14.

To find $\mathbf{Z}_{Th}$, consider the circuit in Fig. (a).

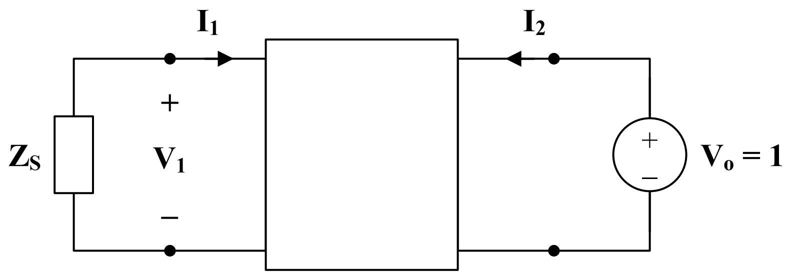

(a)

$$\mathbf{V}_1 = \mathbf{z}_{11}\mathbf{I}_1 + \mathbf{z}_{12}\mathbf{I}_2 \qquad (1)$$
$$\mathbf{V}_2 = \mathbf{z}_{21}\mathbf{I}_1 + \mathbf{z}_{22}\mathbf{I}_2 \qquad (2)$$

But

$$\mathbf{V}_2 = 1, \qquad \mathbf{V}_1 = -\mathbf{Z}_s\mathbf{I}_1$$

Hence, $$0 = (\mathbf{z}_{11} + \mathbf{Z}_s)\mathbf{I}_1 + \mathbf{z}_{12}\mathbf{I}_2 \longrightarrow \mathbf{I}_1 = \frac{-\mathbf{z}_{12}}{\mathbf{z}_{11} + \mathbf{Z}_s}\mathbf{I}_2$$

$$1 = \left(\frac{-\mathbf{z}_{21}\mathbf{z}_{12}}{\mathbf{z}_{11} + \mathbf{Z}_s} + \mathbf{z}_{22}\right)\mathbf{I}_2$$

$$\mathbf{Z}_{Th} = \frac{\mathbf{V}_2}{\mathbf{I}_2} = \frac{1}{\mathbf{I}_2} = \underline{\mathbf{z}_{22} - \frac{\mathbf{z}_{21}\mathbf{z}_{12}}{\mathbf{z}_{11} + \mathbf{Z}_s}}$$

To find $\mathbf{V}_{Th}$, consider the circuit in Fig. (b).

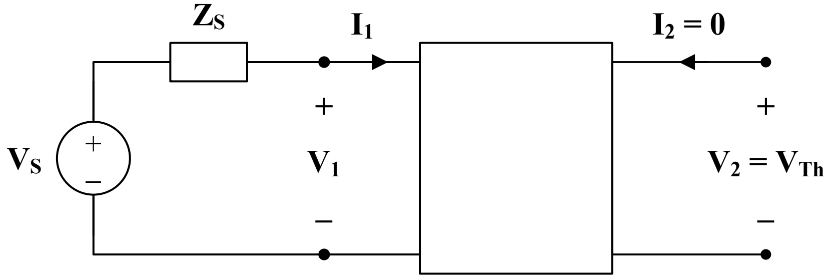

(b)

$$\mathbf{I}_2 = 0, \qquad \mathbf{V}_1 = \mathbf{V}_s - \mathbf{I}_1\mathbf{Z}_s$$

Substituting these into (1) and (2),

$$\mathbf{V}_s - \mathbf{I}_1 \mathbf{Z}_s = \mathbf{z}_{11} \mathbf{I}_1 \quad \longrightarrow \quad \mathbf{I}_1 = \frac{\mathbf{V}_s}{\mathbf{z}_{11} + \mathbf{Z}_s}$$

$$\mathbf{V}_2 = \mathbf{z}_{21} \mathbf{I}_1 = \frac{\mathbf{z}_{21} \mathbf{V}_s}{\mathbf{z}_{11} + \mathbf{Z}_s}$$

$$\mathbf{V}_{Th} = \mathbf{V}_2 = \underline{\frac{\mathbf{z}_{21} \mathbf{V}_s}{\mathbf{z}_{11} + \mathbf{Z}_s}}$$

Chapter 19, Solution 15.

(a) From Prob. 18.12,

$$Z_{Th} = z_{22} - \frac{z_{12} z_{21}}{z_{11} + Z_s} = 120 - \frac{80x60}{40 + 10} = 24$$

$$\underline{Z_L = Z_{Th} = 24\Omega}$$

(b) $V_{Th} = \dfrac{z_{21}}{z_{11} + Z_s} V_s = \dfrac{80}{40 + 10}(120) = 192$

$$P_{max} = \frac{V^2{}_{Th}}{8R_{Th}} = \frac{192^2}{8x24} = \underline{192\ W}$$

Chapter 19, Solution 16.

As a reciprocal two-port, the given circuit can be represented as shown in Fig. (a).

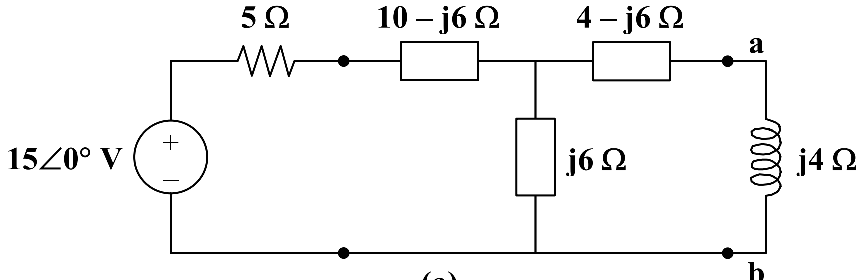

(a)

At terminals a-b,

$$\mathbf{Z}_{Th} = (4 - j6) + j6 \,||\, (5 + 10 - j6)$$

$$\mathbf{Z}_{Th} = 4 - j6 + \frac{j6(15 - j6)}{15} = 4 - j6 + 2.4 + j6$$

$$\mathbf{Z}_{Th} = \underline{\mathbf{6.4\,\Omega}}$$

$$\mathbf{V}_{Th} = \frac{j6}{j6 + 5 + 10 - j6}(15\angle 0°) = j6 = \underline{\mathbf{6\angle 90°\ V}}$$

The Thevenin equivalent circuit is shown in Fig. (b).

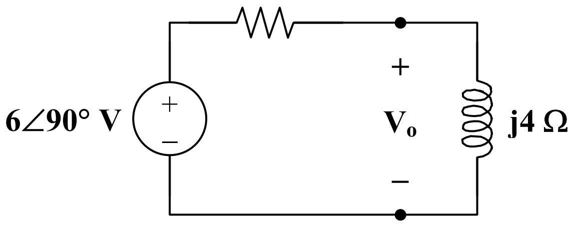

(b)

From this,

$$\mathbf{V}_o = \frac{j4}{6.4 + j4}(j6) = 3.18\angle 148°$$

$$v_o(t) = \underline{\mathbf{3.18\cos(2t + 148°)\ V}}$$

Chapter 19, Solution 17.

To obtain $\mathbf{z}_{11}$ and $\mathbf{z}_{21}$, consider the circuit in Fig. (a).

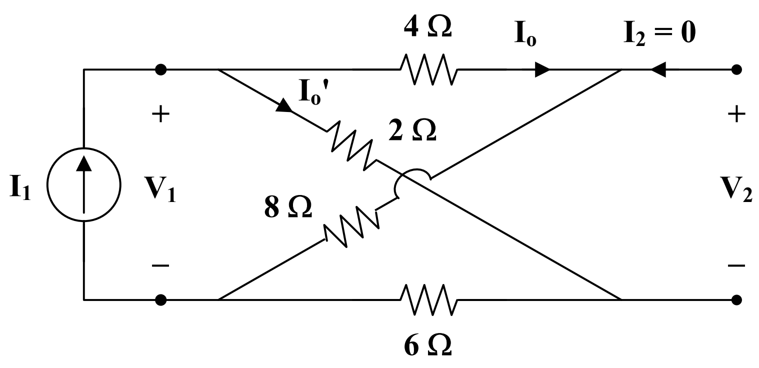

(a)

In this case, the 4-Ω and 8-Ω resistors are in series, since the same current, $\mathbf{I}_o$, passes through them. Similarly, the 2-Ω and 6-Ω resistors are in series, since the same current, $\mathbf{I}_o'$, passes through them.

$$\mathbf{z}_{11} = \frac{\mathbf{V}_1}{\mathbf{I}_1} = (4+8) \,||\, (2+6) = 12 \,||\, 8 = \frac{(12)(8)}{20} = 4.8\,\Omega$$

$$\mathbf{I}_o = \frac{8}{8+12}\mathbf{I}_1 = \frac{2}{5}\mathbf{I}_1 \qquad\qquad \mathbf{I}_o' = \frac{3}{5}\mathbf{I}_1$$

But $\qquad -\mathbf{V}_2 - 4\mathbf{I}_o + 2\mathbf{I}_o' = 0$

$$\mathbf{V}_2 = -4\mathbf{I}_o + 2\mathbf{I}_o' = \frac{-8}{5}\mathbf{I}_1 + \frac{6}{5}\mathbf{I}_1 = \frac{-2}{5}\mathbf{I}_1$$

$$\mathbf{z}_{21} = \frac{\mathbf{V}_2}{\mathbf{I}_1} = \frac{-2}{5} = -0.4\,\Omega$$

To get $\mathbf{z}_{22}$ and $\mathbf{z}_{12}$, consider the circuit in Fig. (b).

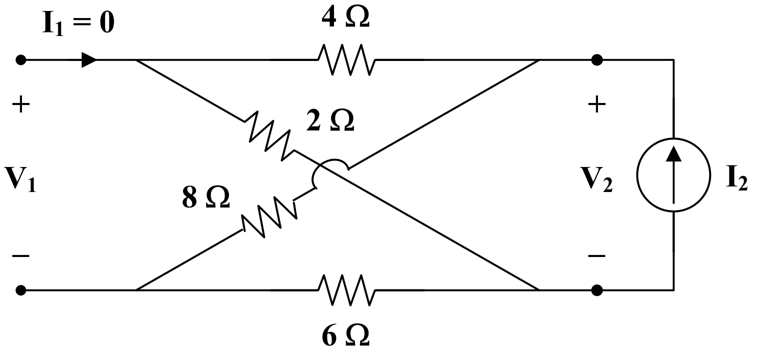

(b)

$$\mathbf{z}_{22} = \frac{\mathbf{V}_2}{\mathbf{I}_2} = (4+2) \,||\, (8+6) = 6 \,||\, 14 = \frac{(6)(14)}{20} = 4.2\,\Omega$$

$$\mathbf{z}_{12} = \mathbf{z}_{21} = -0.4\,\Omega$$

Thus,

$$[\mathbf{z}] = \begin{bmatrix} \mathbf{4.8} & \mathbf{-0.4} \\ \mathbf{-0.4} & \mathbf{4.2} \end{bmatrix}\Omega$$

We may take advantage of Table 18.1 to get [**y**] from [**z**].

$$\Delta_z = (4.8)(4.2) - (0.4)^2 = 20$$

$$\mathbf{y}_{11} = \frac{\mathbf{z}_{22}}{\Delta_z} = \frac{4.2}{20} = 0.21 \qquad \mathbf{y}_{12} = \frac{-\mathbf{z}_{12}}{\Delta_z} = \frac{0.4}{20} = 0.02$$

$$\mathbf{y}_{21} = \frac{-\mathbf{z}_{21}}{\Delta_z} = \frac{0.4}{20} = 0.02 \qquad \mathbf{y}_{22} = \frac{\mathbf{z}_{11}}{\Delta_z} = \frac{4.8}{20} = 0.24$$

Thus,

$$[\mathbf{y}] = \underline{\begin{bmatrix} \mathbf{0.21} & \mathbf{0.02} \\ \mathbf{0.02} & \mathbf{0.24} \end{bmatrix} \mathbf{S}}$$

Chapter 19, Solution 18.

To get $\mathbf{y}_{11}$ and $\mathbf{y}_{21}$, consider the circuit in Fig.(a).

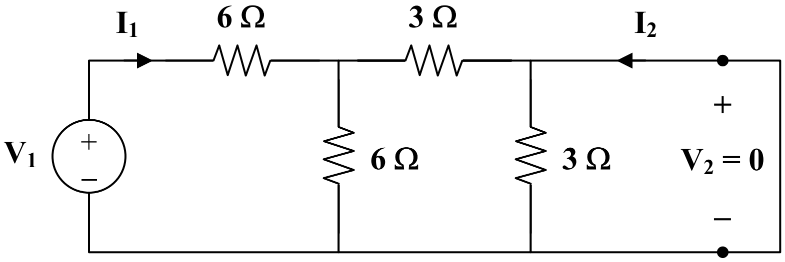

(a)

$$\mathbf{V}_1 = (6 + 6 \,\|\, 3)\mathbf{I}_1 = 8\mathbf{I}_1$$

$$\mathbf{y}_{11} = \frac{\mathbf{I}_1}{\mathbf{V}_1} = \frac{1}{8}$$

$$\mathbf{I}_2 = \frac{-6}{6+3}\mathbf{I}_1 = \frac{-2}{3}\frac{\mathbf{V}_1}{8} = \frac{-\mathbf{V}_1}{12}$$

$$\mathbf{y}_{21} = \frac{\mathbf{I}_2}{\mathbf{V}_1} = \frac{-1}{12}$$

To get $\mathbf{y}_{22}$ and $\mathbf{y}_{12}$, consider the circuit in Fig.(b).

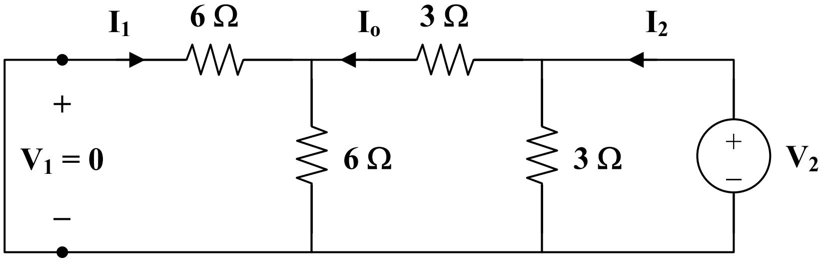

(b)

$$\mathbf{y}_{22} = \frac{\mathbf{I}_2}{\mathbf{V}_2} = \frac{1}{3 \parallel (3 + 6 \parallel 6)} = \frac{1}{3 \parallel 6} = \frac{1}{2}$$

$$\mathbf{I}_1 = \frac{-\mathbf{I}_o}{2}, \qquad \mathbf{I}_o = \frac{3}{3+6}\mathbf{I}_2 = \frac{1}{3}\mathbf{I}_2$$

$$\mathbf{I}_1 = \frac{-\mathbf{I}_2}{6} = \left(\frac{-1}{6}\right)\left(\frac{1}{2}\mathbf{V}_2\right) = \frac{-\mathbf{V}_2}{12}$$

$$\mathbf{y}_{12} = \frac{\mathbf{I}_1}{\mathbf{V}_2} = \frac{-1}{12} = \mathbf{y}_{21}$$

Thus,

$$[\mathbf{y}] = \begin{bmatrix} \frac{1}{8} & \frac{-1}{12} \\ \frac{-1}{12} & \frac{1}{2} \end{bmatrix} \mathbf{S}$$

Chapter 19, Solution 19.

Consider the circuit in Fig.(a) for calculating $\mathbf{y}_{11}$ and $\mathbf{y}_{21}$.

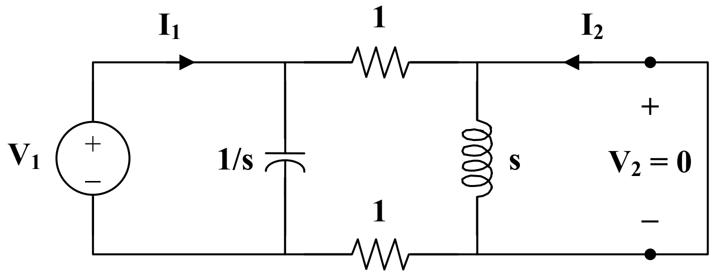

(a)

$$\mathbf{V}_1 = \left(\frac{1}{s} \parallel 2\right)\mathbf{I}_1 = \frac{2/s}{2 + (1/s)}\mathbf{I}_1 = \frac{2}{2s+1}\mathbf{I}_1$$

$$\mathbf{y}_{11} = \frac{\mathbf{I}_1}{\mathbf{V}_1} = \frac{2s+1}{2} = s + 0.5$$

$$\mathbf{I}_2 = \frac{(-1/s)}{(1/s) + 2}\mathbf{I}_1 = \frac{-\mathbf{I}_1}{2s+1} = \frac{-\mathbf{V}_1}{2}$$

$$\mathbf{y}_{21} = \frac{\mathbf{I}_2}{\mathbf{V}_1} = -0.5$$

To get $\mathbf{y}_{22}$ and $\mathbf{y}_{12}$, refer to the circuit in Fig.(b).

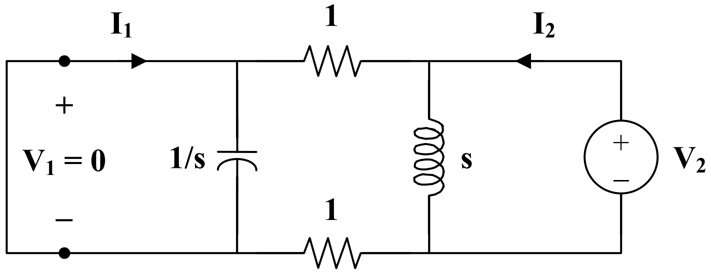

(b)

$$\mathbf{V}_2 = (s \parallel 2)\mathbf{I}_2 = \frac{2s}{s+2}\mathbf{I}_2$$

$$\mathbf{y}_{22} = \frac{\mathbf{I}_2}{\mathbf{V}_2} = \frac{s+2}{2s} = 0.5 + \frac{1}{s}$$

$$\mathbf{I}_1 = \frac{-s}{s+2}\mathbf{I}_2 = \frac{-s}{s+2} \cdot \frac{s+2}{2s}\mathbf{V}_2 = \frac{-\mathbf{V}_2}{2}$$

$$\mathbf{y}_{12} = \frac{\mathbf{I}_1}{\mathbf{V}_2} = -0.5$$

Thus,

$$[\mathbf{y}] = \underline{\begin{bmatrix} \mathbf{s+0.5} & \mathbf{-0.5} \\ \mathbf{-0.5} & \mathbf{0.5+1/s} \end{bmatrix} \mathbf{S}}$$

Chapter 19, Solution 20.

To get y_{11} and y_{21}, consider the circuit below.

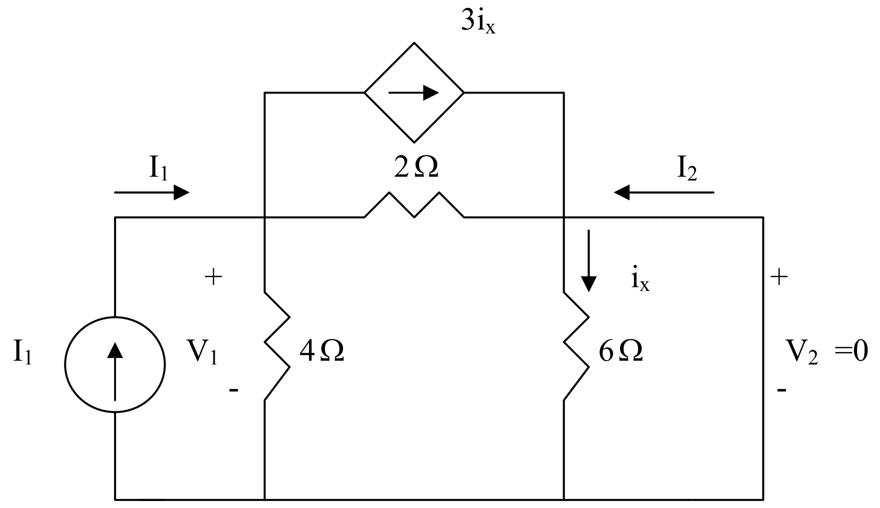

Since 6-ohm resistor is short-circuited, $i_x = 0$

$$V_1 = I_1(4//2) = \frac{8}{6}I_1 \longrightarrow y_{11} = \frac{I_1}{V_1} = 0.75$$

$$I_2 = -\frac{4}{4+2}I_1 = -\frac{2}{3}(\frac{6}{8}V_1) = -\frac{1}{2}V_1 \longrightarrow y_{21} = \frac{I_2}{V_1} = -0.5$$

To get y_{22} and y_{12}, consider the circuit below.

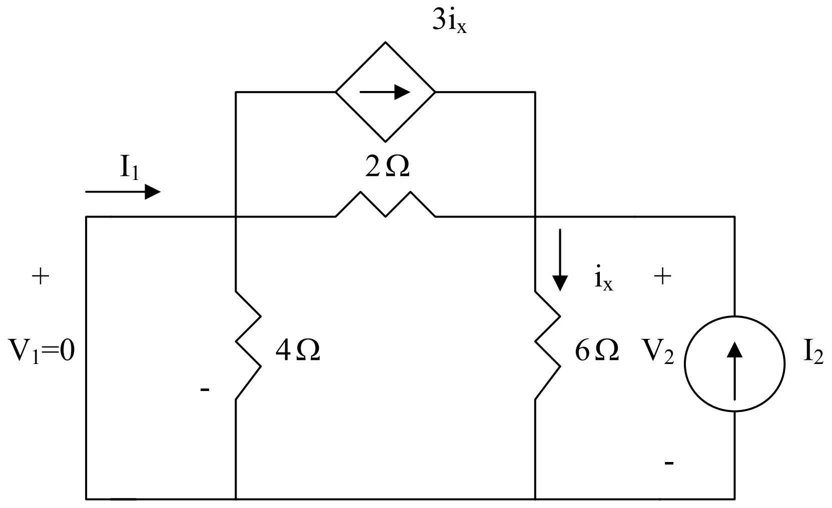

$$i_x = \frac{V_2}{6}, \quad I_2 = i_x - 3i_x + \frac{V_2}{2} = \frac{V_2}{6} \longrightarrow y_{22} = \frac{I_2}{V_2} = \frac{1}{6} = 0.1667$$

$$I_1 = 3i_x - \frac{V_2}{2} = 0 \longrightarrow y_{12} = \frac{I_1}{V_2} = 0$$

Thus,

$$\underline{[y] = \begin{bmatrix} 0.75 & 0 \\ -0.5 & 0.1667 \end{bmatrix} S}$$

Chapter 19, Solution 21.

To get $\mathbf{y}_{11}$ and $\mathbf{y}_{21}$, refer to Fig. (a).

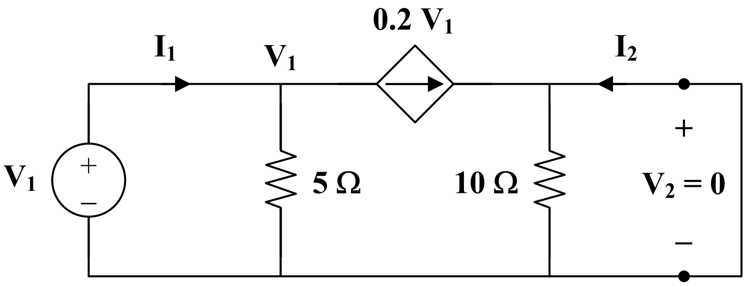

(a)

At node 1,

$$\mathbf{I}_1 = \frac{\mathbf{V}_1}{5} + 0.2\mathbf{V}_1 = 0.4\mathbf{V}_1 \longrightarrow \mathbf{y}_{11} = \frac{\mathbf{I}_1}{\mathbf{V}_1} = 0.4$$

$$\mathbf{I}_2 = -0.2\mathbf{V}_1 \longrightarrow \mathbf{y}_{21} = \frac{\mathbf{I}_2}{\mathbf{V}_1} = -0.2$$

To get $\mathbf{y}_{22}$ and $\mathbf{y}_{12}$, refer to the circuit in Fig. (b).

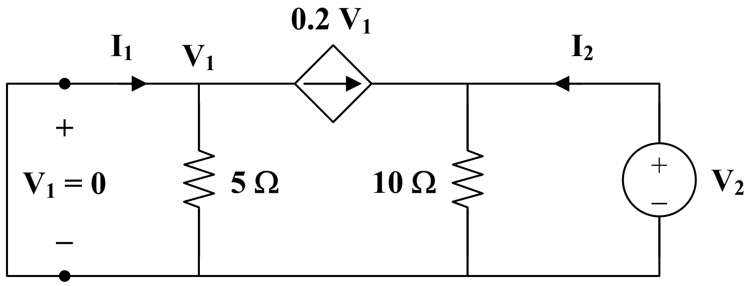

(b)

Since $\mathbf{V}_1 = 0$, the dependent current source can be replaced with an open circuit.

$$\mathbf{V}_2 = 10\mathbf{I}_2 \longrightarrow \mathbf{y}_{22} = \frac{\mathbf{I}_2}{\mathbf{V}_2} = \frac{1}{10} = 0.1$$

$$\mathbf{y}_{12} = \frac{\mathbf{I}_1}{\mathbf{V}_2} = 0$$

Thus,

$$[\mathbf{y}] = \begin{bmatrix} 0.4 & 0 \\ -0.2 & 0.1 \end{bmatrix} \mathrm{S}$$

Consequently, **the y parameter equivalent circuit is shown in Fig. (c)**.

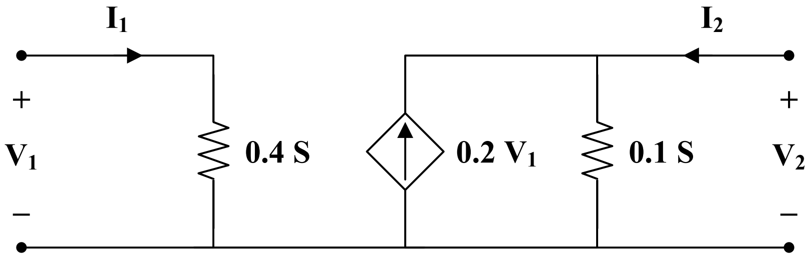

(c)

Chapter 19, Solution 22.

(a) To get $\mathbf{y}_{11}$ and $\mathbf{y}_{21}$ refer to the circuit in Fig. (a).

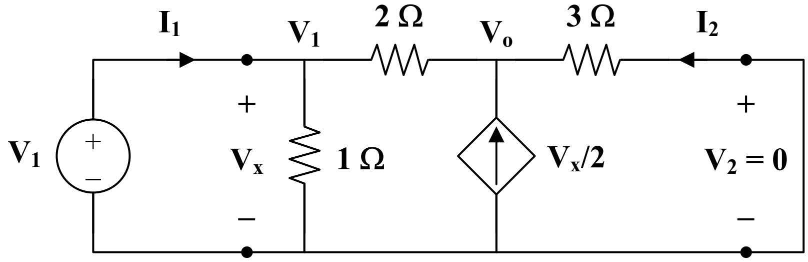

(a)

At node 1,

$$\mathbf{I}_1 = \frac{\mathbf{V}_1}{1} + \frac{\mathbf{V}_1 - \mathbf{V}_o}{2} \longrightarrow \mathbf{I}_1 = 1.5\mathbf{V}_1 - 0.5\mathbf{V}_o \qquad (1)$$

At node 2,

$$\frac{\mathbf{V}_1 - \mathbf{V}_o}{2} + \frac{\mathbf{V}_1}{2} = \frac{\mathbf{V}_o}{3} \longrightarrow 1.2\mathbf{V}_1 = \mathbf{V}_o \qquad (2)$$

Substituting (2) into (1) gives,

$$\mathbf{I}_1 = 1.5\mathbf{V}_1 - 0.6\mathbf{V}_1 = 0.9\mathbf{V}_1 \longrightarrow \mathbf{y}_{11} = \frac{\mathbf{I}_1}{\mathbf{V}_1} = 0.9$$

$$\mathbf{I}_2 = \frac{-\mathbf{V}_o}{3} = -0.4\mathbf{V}_1 \longrightarrow \mathbf{y}_{21} = \frac{\mathbf{I}_2}{\mathbf{V}_1} = -0.4$$

To get $\mathbf{y}_{22}$ and $\mathbf{y}_{12}$ refer to the circuit in Fig. (b).

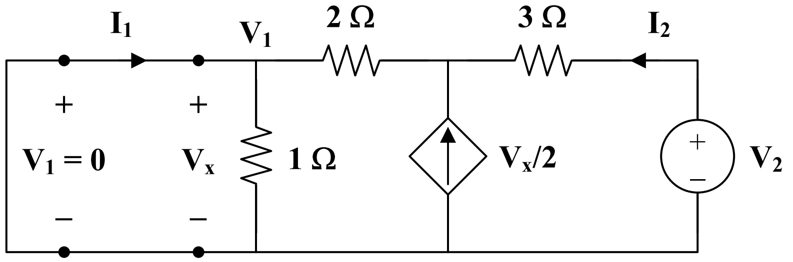

(b)

$\mathbf{V}_x = \mathbf{V}_1 = 0$ so that the dependent current source can be replaced by an open circuit.

$$\mathbf{V}_2 = (3 + 2 + 0)\mathbf{I}_2 = 5\mathbf{I}_2 \longrightarrow \mathbf{y}_{22} = \frac{\mathbf{I}_2}{\mathbf{V}_2} = \frac{1}{5} = 0.2$$

$$\mathbf{I}_1 = -\mathbf{I}_2 = -0.2\mathbf{V}_2 \longrightarrow \mathbf{y}_{12} = \frac{\mathbf{I}_1}{\mathbf{V}_2} = -0.2$$

Thus,

$$[\mathbf{y}] = \underline{\begin{bmatrix} \mathbf{0.9} & \mathbf{-0.2} \\ \mathbf{-0.4} & \mathbf{0.2} \end{bmatrix} \mathbf{S}}$$

(b) To get $\mathbf{y}_{11}$ and $\mathbf{y}_{21}$ refer to Fig. (c).

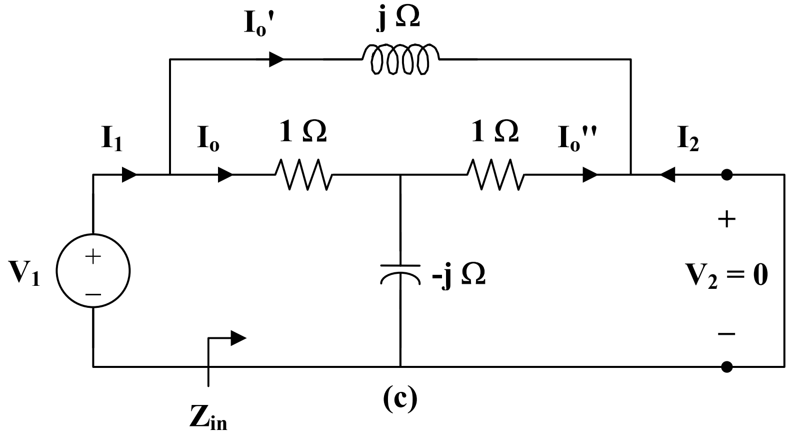

(c)

$$\mathbf{Z}_{in} = j \,||\, (1 + 1 \,||\, -j) = j \,||\, \left(1 + \frac{-j}{1 - j}\right) = j \,||\, (1.5 - j0.5)$$

$$= \frac{j(1.5 - j0.5)}{1.5 + j0.5} = 0.6 + j0.8$$

$$\mathbf{V}_1 = \mathbf{Z}_{in}\,\mathbf{I}_1 \quad \longrightarrow \quad \mathbf{y}_{11} = \frac{\mathbf{I}_1}{\mathbf{V}_1} = \frac{1}{\mathbf{Z}_{in}} = \frac{1}{0.6 + j0.8} = 0.6 - j0.8$$

$$\mathbf{I}_o = \frac{j}{1.5 + j0.5}\mathbf{I}_1, \qquad \mathbf{I}_o' = \frac{1.5 - j0.5}{1.5 + j0.5}\mathbf{I}_1$$

$$\mathbf{I}_o'' = \frac{-j}{1 - j}\mathbf{I}_o = \frac{\mathbf{I}_1}{(1 - j)(1.5 + j0.5)} = \frac{\mathbf{I}_1}{2 - j}$$

$$-\mathbf{I}_2 = \mathbf{I}_o' + \mathbf{I}_o'' = \frac{(1.5 - j0.5)^2}{2.5}\mathbf{I}_1 + \frac{2 + j}{5}\mathbf{I}_1 = (1.2 - j0.4)\mathbf{I}_1$$

$$-\mathbf{I}_2 = (1.2 - j0.4)(0.6 - j0.8)\,\mathbf{V}_1 = (0.4 - j1.2)\,\mathbf{V}_1$$

$$\mathbf{y}_{21} = \frac{\mathbf{I}_2}{\mathbf{V}_1} = -0.4 + j1.2 = \mathbf{y}_{12}$$

To get $\mathbf{y}_{22}$ refer to the circuit in Fig.(d).

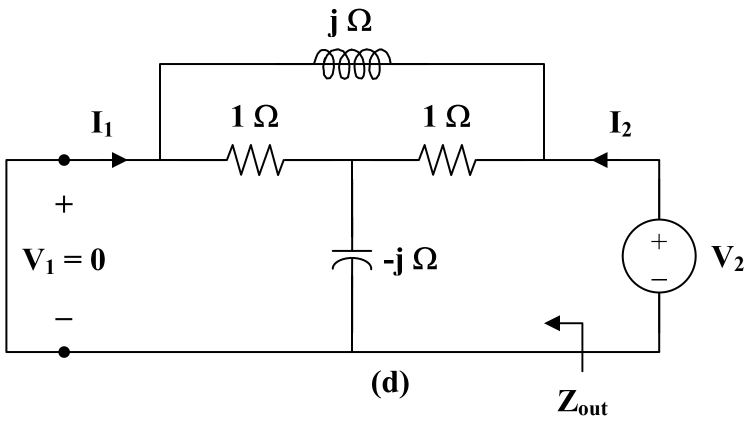

(d)

$$\mathbf{Z}_{out} = j\,||\,(1 + 1\,||\,-j) = 0.6 + j0.8$$

$$\mathbf{y}_{22} = \frac{1}{\mathbf{Z}_{out}} = 0.6 - j0.8$$

Thus,

$$[\mathbf{y}] = \underline{\begin{bmatrix} \mathbf{0.6 - j0.8} & \mathbf{-0.4 + j1.2} \\ \mathbf{-0.4 + j1.2} & \mathbf{0.6 - j0.8} \end{bmatrix} \mathbf{S}}$$

Chapter 19, Solution 23.

(a)

$$-y_{12} = 1 // \frac{1}{s} = \frac{1}{s+1} \longrightarrow y_{12} = -\frac{1}{s+1}$$

$$y_{11} + y_{12} = 1 \longrightarrow y_{11} = 1 - y_{12} = 1 + \frac{1}{s+1} = \frac{s+2}{s+1}$$

$$y_{22} + y_{12} = s \longrightarrow y_{22} = s - y_{12} = s + \frac{1}{s+1} = \frac{s^2+s+1}{s+1}$$

$$[y] = \begin{bmatrix} \frac{s+2}{s+1} & \frac{-1}{s+1} \\ \frac{-1}{s+1} & \frac{s^2+s+1}{s+1} \end{bmatrix}$$

(b) Consider the network below.

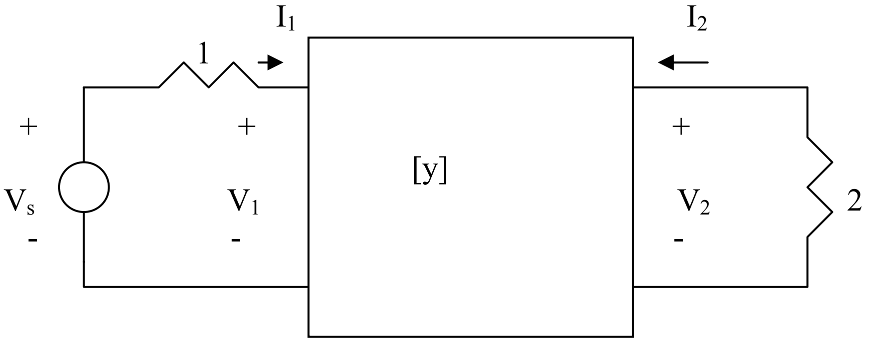

$$V_s = I_1 + V_1 \tag{1}$$

$$V_2 = -2I_2 \tag{2}$$

$$I_1 = y_{11}V_1 + y_{12}V_2 \tag{3}$$

$$I_2 = y_{21}V_1 + y_{22}V_2 \tag{4}$$

From (1) and (3)

$$V_s - V_1 = y_{11}V_1 + y_{12}V_2 \quad \longrightarrow \quad V_s = (1 + y_{11})V_1 + y_{12}V_2 \qquad (5)$$

From (2) and (4),

$$-0.5V_2 = y_{21}V_1 + y_{22}V_2 \quad \longrightarrow \quad V_1 = -\frac{1}{y_{21}}(0.5 + y_{22})V_2 \qquad (6)$$

Substituting (6) into (5),

$$V_s = -\frac{(1 + y_{11})(0.5 + y_{22})}{y_{21}}V_2 + y_{12}V_2$$

$$= \frac{2}{s} \quad \longrightarrow \quad V_2 = \frac{2/s}{\left[y_{12} - \dfrac{1}{y_{21}}(1 + y_{11})(0.5 + y_{22})\right]}$$

$$V_2 = \frac{2/s}{-\dfrac{1}{s+1} + (s+1)\left(\dfrac{2s+3}{s+1}\right)\left(\dfrac{1}{2} + \dfrac{s^2+s+1}{s+1}\right)} = \underline{\frac{2(s+1)}{s(2s^3 + 6s^2 + 7.5s + 3.5)}}$$

Chapter 19, Solution 24.

Since this is a reciprocal network, **a Π network is appropriate, as shown below**.

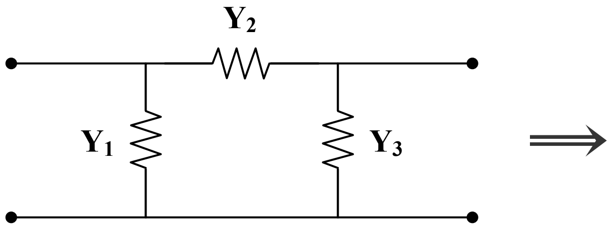

(a)

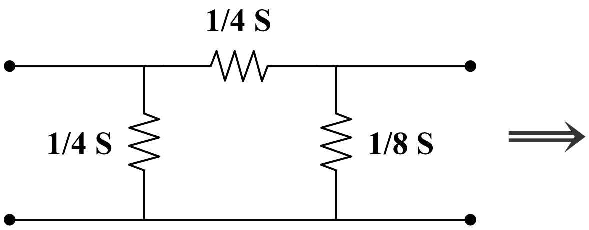

(b)

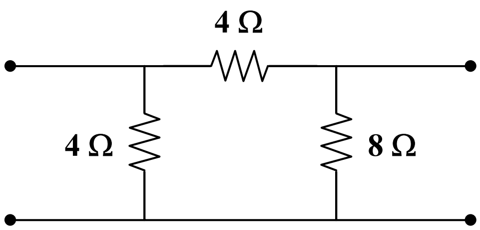

(c)

$$\mathbf{Y}_1 = \mathbf{y}_{11} + \mathbf{y}_{12} = \frac{1}{2} - \frac{1}{4} = \frac{1}{4}\,\text{S}, \qquad \mathbf{Z}_1 = \underline{\mathbf{4\,\Omega}}$$

$$\mathbf{Y}_2 = -\mathbf{y}_{12} = \frac{1}{4}\,\text{S}, \qquad \mathbf{Z}_2 = \underline{\mathbf{4\,\Omega}}$$

$$\mathbf{Y}_3 = \mathbf{y}_{22} + \mathbf{y}_{21} = \frac{3}{8} - \frac{1}{4} = \frac{1}{8}\,\text{S}, \qquad \mathbf{Z}_3 = \underline{\mathbf{8\,\Omega}}$$

Chapter 19, Solution 25.

This is a reciprocal network and is shown below.

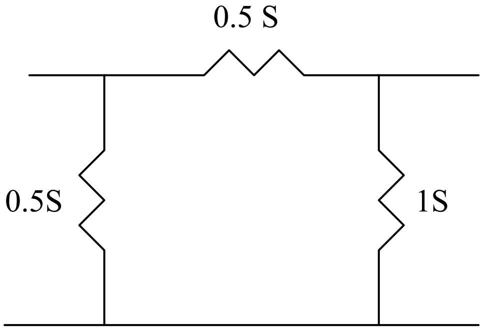

Chapter 19, Solution 26.

To get $\mathbf{y}_{11}$ and $\mathbf{y}_{21}$, consider the circuit in Fig. (a).

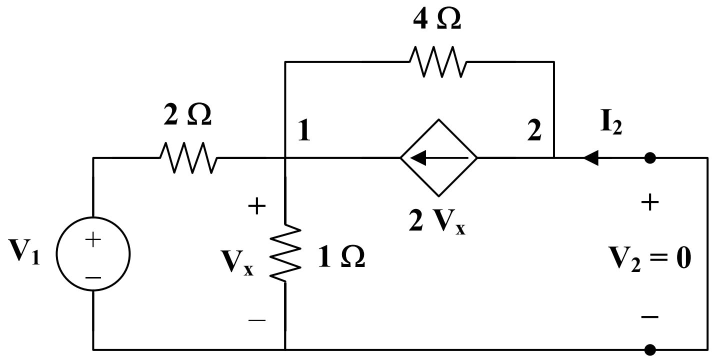

(a)

At node 1,

$$\frac{\mathbf{V}_1 - \mathbf{V}_x}{2} + 2\mathbf{V}_x = \frac{\mathbf{V}_x}{1} + \frac{\mathbf{V}_x}{4} \longrightarrow 2\mathbf{V}_1 = \text{-}\mathbf{V}_x \qquad (1)$$

But $\quad \mathbf{I}_1 = \frac{\mathbf{V}_1 - \mathbf{V}_x}{2} = \frac{\mathbf{V}_1 + 2\mathbf{V}_1}{2} = 1.5\mathbf{V}_1 \longrightarrow \mathbf{y}_{11} = \frac{\mathbf{I}_1}{\mathbf{V}_1} = 1.5$

Also, $\quad \mathbf{I}_2 + \frac{\mathbf{V}_x}{4} = 2\mathbf{V}_x \longrightarrow \mathbf{I}_2 = 1.75\mathbf{V}_x = \text{-}3.5\mathbf{V}_1$

$$\mathbf{y}_{21} = \frac{\mathbf{I}_2}{\mathbf{V}_1} = \text{-}3.5$$

To get $\mathbf{y}_{22}$ and $\mathbf{y}_{12}$, consider the circuit in Fig.(b).

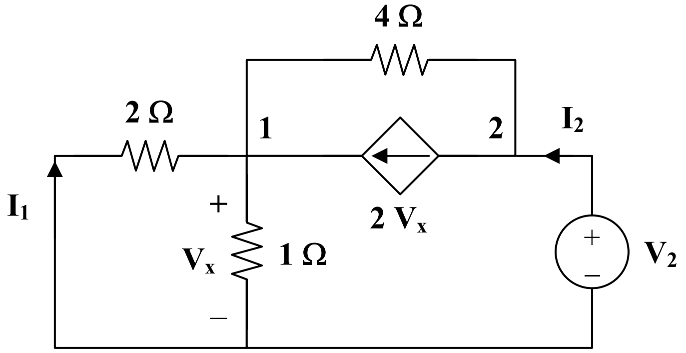

(b)

At node 2,

$$\mathbf{I}_2 = 2\mathbf{V}_x + \frac{\mathbf{V}_2 - \mathbf{V}_x}{4} \qquad (2)$$

At node 1,

$$2\mathbf{V}_x + \frac{\mathbf{V}_2 - \mathbf{V}_x}{4} = \frac{\mathbf{V}_x}{2} + \frac{\mathbf{V}_x}{1} = \frac{3}{2}\mathbf{V}_x \longrightarrow \mathbf{V}_2 = \text{-}\mathbf{V}_x \qquad (3)$$

Substituting (3) into (2) gives

$$\mathbf{I}_2 = 2\mathbf{V}_x - \frac{1}{2}\mathbf{V}_x = 1.5\mathbf{V}_x = \text{-}1.5\mathbf{V}_2$$

$$\mathbf{y}_{22} = \frac{\mathbf{I}_2}{\mathbf{V}_2} = \text{-}1.5$$

$$\mathbf{I}_1 = \frac{\text{-}\mathbf{V}_x}{2} = \frac{\mathbf{V}_2}{2} \longrightarrow \mathbf{y}_{12} = \frac{\mathbf{I}_1}{\mathbf{V}_2} = 0.5$$

Thus,

$$[y] = \begin{bmatrix} \mathbf{1.5} & \mathbf{0.5} \\ \mathbf{-3.5} & \mathbf{-1.5} \end{bmatrix} \mathbf{S}$$

Chapter 19, Solution 27.

Consider the circuit in Fig. (a).

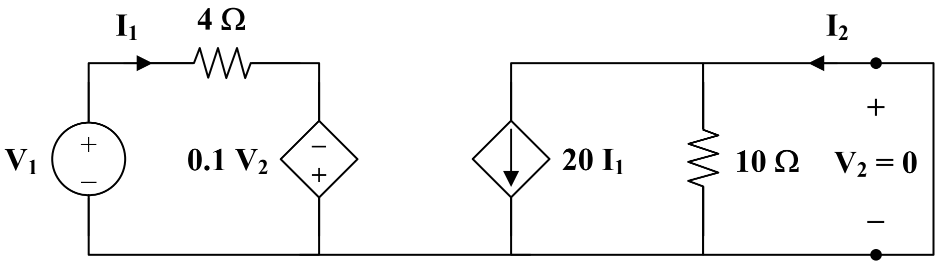

(a)

$$\mathbf{V}_1 = 4\mathbf{I}_1 \longrightarrow \mathbf{y}_{11} = \frac{\mathbf{I}_1}{\mathbf{V}_1} = \frac{\mathbf{I}_1}{4\mathbf{I}_1} = 0.25$$

$$\mathbf{I}_2 = 20\mathbf{I}_1 = 5\mathbf{V}_1 \longrightarrow \mathbf{y}_{21} = \frac{\mathbf{I}_2}{\mathbf{V}_1} = 5$$

Consider the circuit in Fig. (b).

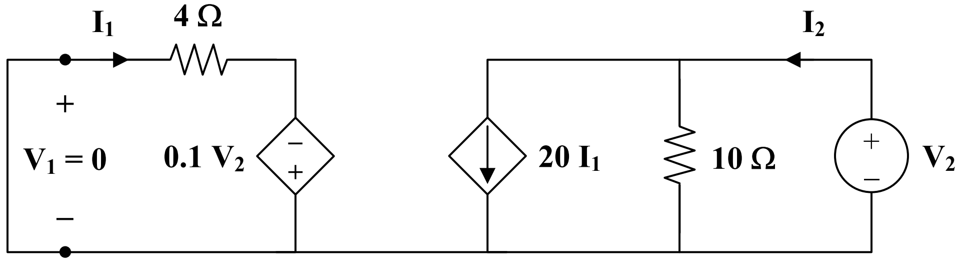

(b)

$$4\mathbf{I}_1 = 0.1\mathbf{V}_2 \longrightarrow \mathbf{y}_{12} = \frac{\mathbf{I}_1}{\mathbf{V}_2} = \frac{0.1}{4} = 0.025$$

$$\mathbf{I}_2 = 20\mathbf{I}_1 + \frac{\mathbf{V}_2}{10} = 0.5\mathbf{V}_2 + 0.1\mathbf{V}_2 = 0.6\mathbf{V}_2 \longrightarrow \mathbf{y}_{22} = \frac{\mathbf{I}_2}{\mathbf{V}_2} = 0.6$$

Thus,

$$[\mathbf{y}] = \begin{bmatrix} \mathbf{0.25} & \mathbf{0.025} \\ \mathbf{5} & \mathbf{0.6} \end{bmatrix} \mathbf{S}$$

Alternatively, from the given circuit,

$$\mathbf{V}_1 = 4\mathbf{I}_1 - 0.1\mathbf{V}_2$$
$$\mathbf{I}_2 = 20\mathbf{I}_1 + 0.1\mathbf{V}_2$$

Comparing these with the equations for the h parameters show that

$$\mathbf{h}_{11} = 4, \qquad \mathbf{h}_{12} = \text{-}0.1, \qquad \mathbf{h}_{21} = 20, \qquad \mathbf{h}_{22} = 0.1$$

Using Table 18.1,

$$\mathbf{y}_{11} = \frac{1}{\mathbf{h}_{11}} = \frac{1}{4} = 0.25, \qquad \mathbf{y}_{12} = \frac{\text{-}\mathbf{h}_{12}}{\mathbf{h}_{11}} = \frac{0.1}{4} = 0.025$$

$$\mathbf{y}_{21} = \frac{\mathbf{h}_{21}}{\mathbf{h}_{11}} = \frac{20}{4} = 5, \qquad \mathbf{y}_{22} = \frac{\Delta_h}{\mathbf{h}_{11}} = \frac{0.4 + 2}{4} = 0.6$$

as above.

Chapter 19, Solution 28.

We obtain $\mathbf{y}_{11}$ and $\mathbf{y}_{21}$ by considering the circuit in Fig.(a).

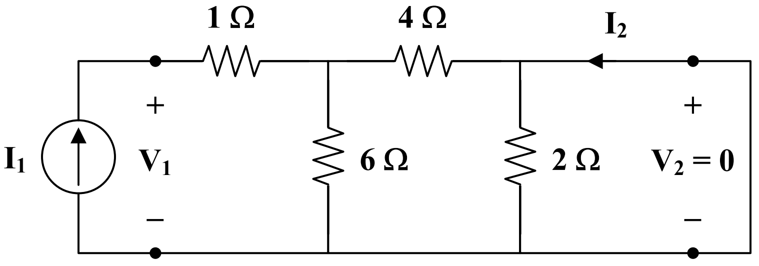

(a)

$$\mathbf{Z}_{in} = 1 + 6 \,||\, 4 = 3.4$$

$$\mathbf{y}_{11} = \frac{\mathbf{I}_1}{\mathbf{V}_1} = \frac{1}{\mathbf{Z}_{in}} = 0.2941$$

$$\mathbf{I}_2 = \frac{\text{-}6}{10}\mathbf{I}_1 = \left(\frac{\text{-}6}{10}\right)\left(\frac{\mathbf{V}_1}{3.4}\right) = \frac{\text{-}6}{34}\mathbf{V}_1$$

$$\mathbf{y}_{21} = \frac{\mathbf{I}_2}{\mathbf{V}_1} = \frac{-6}{34} = -0.1765$$

To get $\mathbf{y}_{22}$ and $\mathbf{y}_{12}$, consider the circuit in Fig. (b).

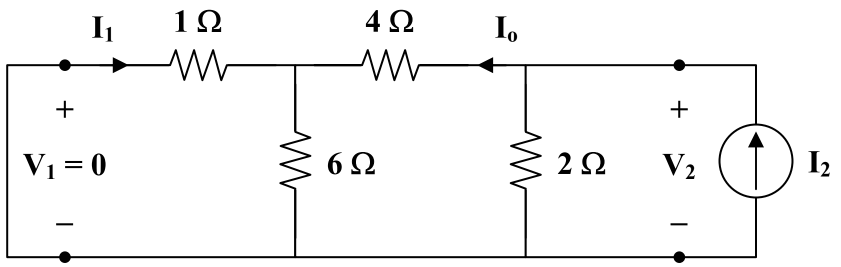

(b)

$$\frac{1}{\mathbf{y}_{22}} = 2 \,||\, (4 + 6 \,||\, 1) = 2 \,||\, \left(4 + \frac{6}{7}\right) = \frac{(2)(34/7)}{2 + (34/7)} = \frac{34}{24} = \frac{V_2}{I_2}$$

$$\mathbf{y}_{22} = \frac{24}{34} = 0.7059$$

$$\mathbf{I}_1 = \frac{-6}{7}\mathbf{I}_o \qquad \mathbf{I}_o = \frac{2}{2 + (34/7)}\mathbf{I}_2 = \frac{14}{48}\mathbf{I}_2 = \frac{7}{34}\mathbf{V}_2$$

$$\mathbf{I}_1 = \frac{-6}{34}\mathbf{V}_2 \longrightarrow \mathbf{y}_{12} = \frac{\mathbf{I}_1}{\mathbf{V}_2} = \frac{-6}{34} = -0.1765$$

Thus,

$$[\mathbf{y}] = \begin{bmatrix} 0.2941 & -0.1765 \\ -0.1765 & 0.7059 \end{bmatrix} \text{S}$$

The equivalent circuit is shown in Fig. (c). After transforming the current source to a voltage source, we have the circuit in Fig. (d).

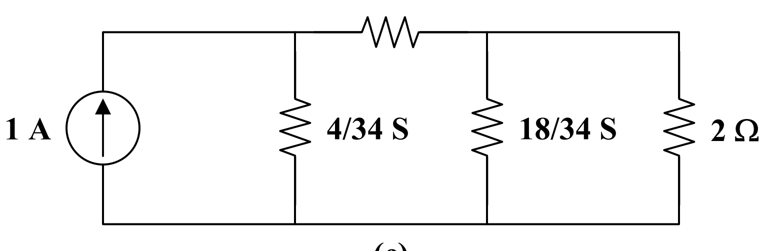

(c)

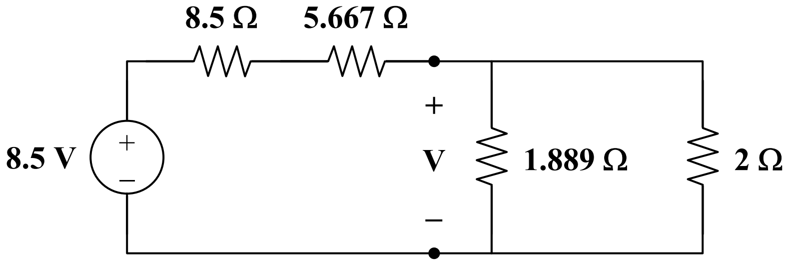

(d)

$$V = \frac{(2 \| 1.889)(8.5)}{2 \| 1.889 + 8.5 + 5.667} = \frac{(0.9714)(8.5)}{0.9714 + 14.167} = 0.5454$$

$$P = \frac{V^2}{R} = \frac{(0.5454)^2}{2} = \underline{\mathbf{0.1487\ W}}$$

Chapter 19, Solution 29.

(a) Transforming the Δ subnetwork to Y gives the circuit in Fig. (a).

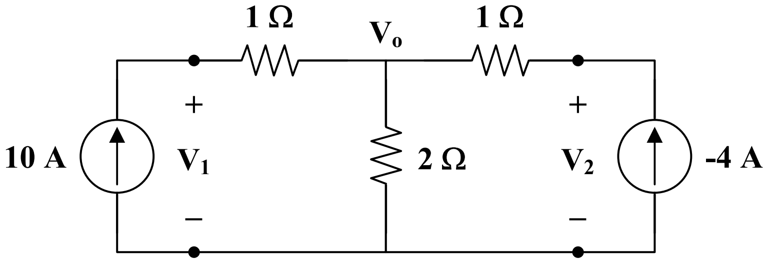

(a)

It is easy to get the z parameters

$$\mathbf{z}_{12} = \mathbf{z}_{21} = 2, \quad \mathbf{z}_{11} = 1 + 2 = 3, \quad \mathbf{z}_{22} = 3$$

$$\Delta_z = \mathbf{z}_{11}\mathbf{z}_{22} - \mathbf{z}_{12}\mathbf{z}_{21} = 9 - 4 = 5$$

$$\mathbf{y}_{11} = \frac{\mathbf{z}_{22}}{\Delta_z} = \frac{3}{5} = \mathbf{y}_{22}, \qquad \mathbf{y}_{12} = \mathbf{y}_{21} = \frac{-\mathbf{z}_{12}}{\Delta_z} = \frac{-2}{5}$$

Thus, the equivalent circuit is as shown in Fig. (b).

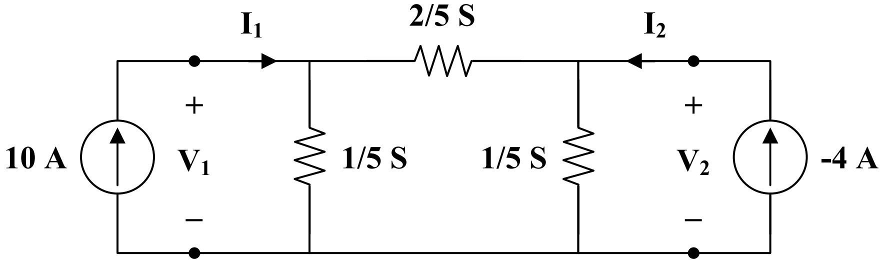

(b)

$$\mathbf{I}_1 = 10 = \frac{3}{5}\mathbf{V}_1 - \frac{2}{5}\mathbf{V}_2 \longrightarrow 50 = 3\mathbf{V}_1 - 2\mathbf{V}_2 \qquad (1)$$

$$\mathbf{I}_2 = \text{-}4 = \frac{\text{-}2}{5}\mathbf{V}_1 + \frac{3}{5}\mathbf{V}_2 \longrightarrow \text{-}20 = \text{-}2\mathbf{V}_1 + 3\mathbf{V}_2$$

$$10 = \mathbf{V}_1 - 1.5\mathbf{V}_2 \longrightarrow \mathbf{V}_1 = 10 + 1.5\mathbf{V}_2 \qquad (2)$$

Substituting (2) into (1),

$$50 = 30 + 4.5\mathbf{V}_2 - 2\mathbf{V}_2 \longrightarrow \mathbf{V}_2 = \underline{\mathbf{8\ V}}$$

$$\mathbf{V}_1 = 10 + 1.5\mathbf{V}_2 = \underline{\mathbf{22\ V}}$$

(b) For direct circuit analysis, consider the circuit in Fig. (a).

For the main non-reference node,

$$10 - 4 = \frac{\mathbf{V}_o}{2} \longrightarrow \mathbf{V}_o = 12$$

$$10 = \frac{\mathbf{V}_1 - \mathbf{V}_o}{1} \longrightarrow \mathbf{V}_1 = 10 + \mathbf{V}_o = \underline{\mathbf{22\ V}}$$

$$\text{-}4 = \frac{\mathbf{V}_2 - \mathbf{V}_o}{1} \longrightarrow \mathbf{V}_2 = \mathbf{V}_o - 4 = \underline{\mathbf{8\ V}}$$

Chapter 19, Solution 30.

(a) Convert to z parameters; then, convert to h parameters using Table 18.1.

$$\mathbf{z}_{11} = \mathbf{z}_{12} = \mathbf{z}_{21} = 60\,\Omega, \qquad \mathbf{z}_{22} = 100\,\Omega$$

$$\Delta_z = \mathbf{z}_{11}\mathbf{z}_{22} - \mathbf{z}_{12}\mathbf{z}_{21} = 6000 - 3600 = 2400$$

$$\mathbf{h}_{11} = \frac{\Delta_z}{\mathbf{z}_{22}} = \frac{2400}{100} = 24, \qquad \mathbf{h}_{12} = \frac{\mathbf{z}_{12}}{\mathbf{z}_{22}} = \frac{60}{100} = 0.6$$

$$\mathbf{h}_{21} = \frac{\text{-}\mathbf{z}_{21}}{\mathbf{z}_{22}} = \text{-}0.6, \qquad \mathbf{h}_{22} = \frac{1}{\mathbf{z}_{22}} = 0.01$$

Thus,

$$[\mathbf{h}] = \begin{bmatrix} \mathbf{24\,\Omega} & \mathbf{0.6} \\ \mathbf{-0.6} & \mathbf{0.01\,S} \end{bmatrix}$$

(b) Similarly,

$\mathbf{z}_{11} = 30\,\Omega \qquad \mathbf{z}_{12} = \mathbf{z}_{21} = \mathbf{z}_{22} = 20\,\Omega$

$$\Delta_z = 600 - 400 = 200$$

$$\mathbf{h}_{11} = \frac{200}{20} = 10 \qquad \mathbf{h}_{12} = \frac{20}{20} = 1$$

$$\mathbf{h}_{21} = -1 \qquad \mathbf{h}_{22} = \frac{1}{20} = 0.05$$

Thus,

$$[\mathbf{h}] = \begin{bmatrix} \mathbf{10\,\Omega} & \mathbf{1} \\ \mathbf{-1} & \mathbf{0.05\,S} \end{bmatrix}$$

Chapter 19, Solution 31.

We get $\mathbf{h}_{11}$ and $\mathbf{h}_{21}$ by considering the circuit in Fig. (a).

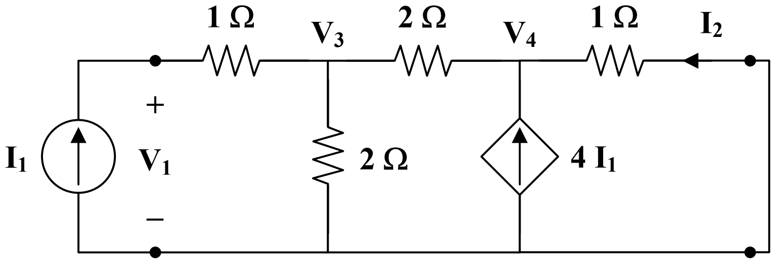

(a)

At node 1,

$$\mathbf{I}_1 = \frac{\mathbf{V}_3}{2} + \frac{\mathbf{V}_3 - \mathbf{V}_4}{2} \longrightarrow 2\mathbf{I}_1 = 2\mathbf{V}_3 - \mathbf{V}_4 \qquad (1)$$

At node 2,

$$\frac{\mathbf{V}_3 - \mathbf{V}_4}{2} + 4\mathbf{I}_1 = \frac{\mathbf{V}_4}{1}$$

$$8\mathbf{I}_1 = -\mathbf{V}_3 + 3\mathbf{V}_4 \longrightarrow 16\mathbf{I}_1 = -2\mathbf{V}_3 + 6\mathbf{V}_4 \qquad (2)$$

Adding (1) and (2),

$$18\mathbf{I}_1 = 5\mathbf{V}_4 \longrightarrow \mathbf{V}_4 = 3.6\mathbf{I}_1$$
$$\mathbf{V}_3 = 3\mathbf{V}_4 - 8\mathbf{I}_1 = 2.8\mathbf{I}_1$$
$$\mathbf{V}_1 = \mathbf{V}_3 + \mathbf{I}_1 = 3.8\mathbf{I}_1$$

$$\mathbf{h}_{11} = \frac{\mathbf{V}_1}{\mathbf{I}_1} = 3.8\,\Omega$$

$$\mathbf{I}_2 = \frac{-\mathbf{V}_4}{1} = -3.6\mathbf{I}_1 \longrightarrow \mathbf{h}_{21} = \frac{\mathbf{I}_2}{\mathbf{I}_1} = -3.6$$

To get $\mathbf{h}_{22}$ and $\mathbf{h}_{12}$, refer to the circuit in Fig. (b). The dependent current source can be replaced by an open circuit since $4\mathbf{I}_1 = 0$.

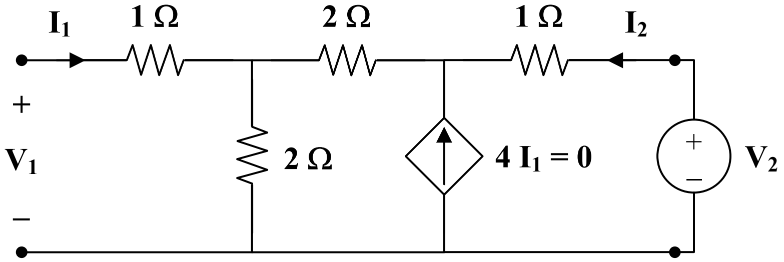

(b)

$$\mathbf{V}_1 = \frac{2}{2+2+1}\mathbf{V}_2 = \frac{2}{5}\mathbf{V}_2 \longrightarrow \mathbf{h}_{12} = \frac{\mathbf{V}_1}{\mathbf{V}_2} = 0.4$$

$$\mathbf{I}_2 = \frac{\mathbf{V}_2}{2+2+1} = \frac{\mathbf{V}_2}{5} \longrightarrow \mathbf{h}_{22} = \frac{\mathbf{I}_2}{\mathbf{V}_2} = \frac{1}{5} = 0.2\text{ S}$$

Thus,

$$[\mathbf{h}] = \underline{\begin{bmatrix} \mathbf{38\,\Omega} & \mathbf{0.4} \\ \mathbf{-3.6} & \mathbf{0.2\ S} \end{bmatrix}}$$

Chapter 19, Solution 32.

(a) We obtain $\mathbf{h}_{11}$ and $\mathbf{h}_{21}$ by referring to the circuit in Fig. (a).

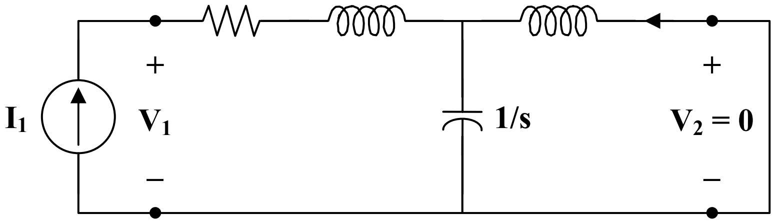

(a)

$$\mathbf{V}_1 = \left(1 + s + s \,\|\, \frac{1}{s}\right)\mathbf{I}_1 = \left(1 + s + \frac{s}{s^2+1}\right)\mathbf{I}_1$$

$$\mathbf{h}_{11} = \frac{\mathbf{V}_1}{\mathbf{I}_1} = s + 1 + \frac{s}{s^2+1}$$

By current division,

$$\mathbf{I}_2 = \frac{-1/s}{s+1/s}\mathbf{I}_1 = \frac{-\mathbf{I}_1}{s+1} \longrightarrow \mathbf{h}_{21} = \frac{\mathbf{I}_2}{\mathbf{I}_1} = \frac{-1}{s^2+1}$$

To get $\mathbf{h}_{22}$ and $\mathbf{h}_{12}$, refer to Fig. (b).

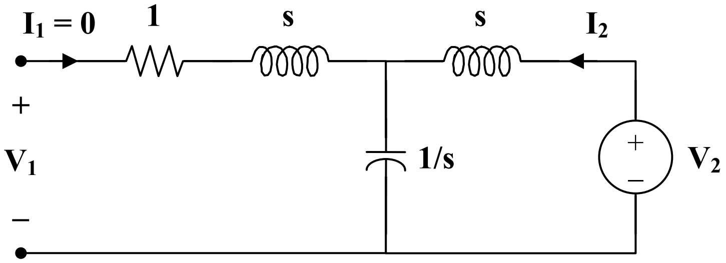

(b)

$$\mathbf{V}_1 = \frac{1/s}{s+1/s}\mathbf{V}_2 = \frac{\mathbf{V}_2}{s^2+1} \longrightarrow \mathbf{h}_{12} = \frac{\mathbf{V}_1}{\mathbf{V}_2} = \frac{1}{s^2+1}$$

$$\mathbf{V}_2 = \left(s + \frac{1}{s}\right)\mathbf{I}_2 \longrightarrow \mathbf{h}_{22} = \frac{\mathbf{I}_2}{\mathbf{V}_2} = \frac{1}{s+1/s} = \frac{s}{s^2+1}$$

Thus,

$$[\mathbf{h}] = \begin{bmatrix} \mathbf{s+1+\frac{s}{s^2+1}} & \mathbf{\frac{1}{s^2+1}} \\ \mathbf{\frac{-1}{s^2+1}} & \mathbf{\frac{s}{s^2+1}} \end{bmatrix}$$

(b) To get $\mathbf{g}_{11}$ and $\mathbf{g}_{21}$, refer to Fig. (c).

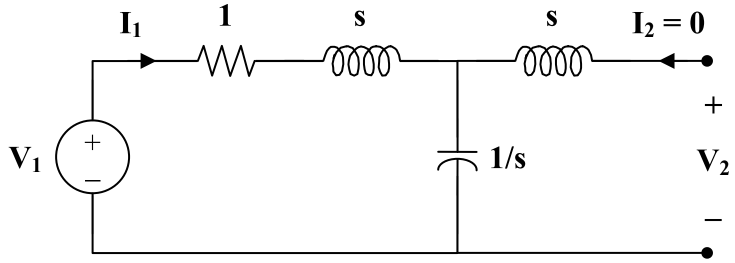

(c)

$$\mathbf{V}_1 = \left(1 + s + \frac{1}{s}\right)\mathbf{I}_1 \longrightarrow \mathbf{g}_{11} = \frac{\mathbf{I}_1}{\mathbf{V}_1} = \frac{1}{1 + s + 1/s} = \frac{s}{s^2 + s + 1}$$

$$\mathbf{V}_2 = \frac{1/s}{1 + s + 1/s}\mathbf{V}_1 = \frac{\mathbf{V}_1}{s^2 + s + 1} \longrightarrow \mathbf{g}_{21} = \frac{\mathbf{V}_2}{\mathbf{V}_1} = \frac{1}{s^2 + s + 1}$$

To get $\mathbf{g}_{22}$ and $\mathbf{g}_{12}$, refer to Fig. (d).

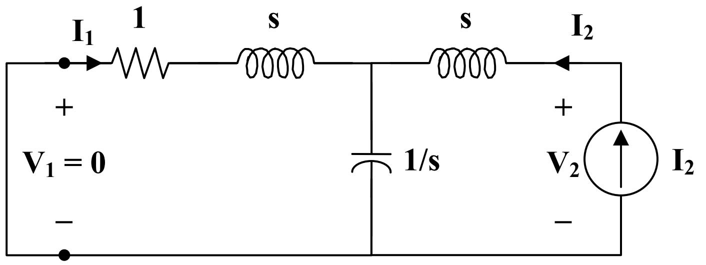

(d)

$$\mathbf{V}_2 = \left(s + \frac{1}{s} \parallel (s+1)\right)\mathbf{I}_2 = \left(s + \frac{(s+1)/s}{1 + s + 1/s}\right)\mathbf{I}_2$$

$$\mathbf{g}_{22} = \frac{\mathbf{V}_2}{\mathbf{I}_2} = s + \frac{s+1}{s^2 + s + 1}$$

$$\mathbf{I}_1 = \frac{-1/s}{1 + s + 1/s}\mathbf{I}_2 = \frac{-\mathbf{I}_2}{s^2 + s + 1} \longrightarrow \mathbf{g}_{12} = \frac{\mathbf{I}_1}{\mathbf{I}_2} = \frac{-1}{s^2 + s + 1}$$

Thus,

$$[\mathbf{g}] = \begin{bmatrix} \dfrac{\mathbf{s}}{\mathbf{s}^2 + \mathbf{s} + 1} & \dfrac{-1}{\mathbf{s}^2 + \mathbf{s} + 1} \\ \dfrac{1}{\mathbf{s}^2 + \mathbf{s} + 1} & \mathbf{s} + \dfrac{\mathbf{s} + 1}{\mathbf{s}^2 + \mathbf{s} + 1} \end{bmatrix}$$

Chapter 19, Solution 33.

To get h_{11} and h_{21}, consider the circuit below.

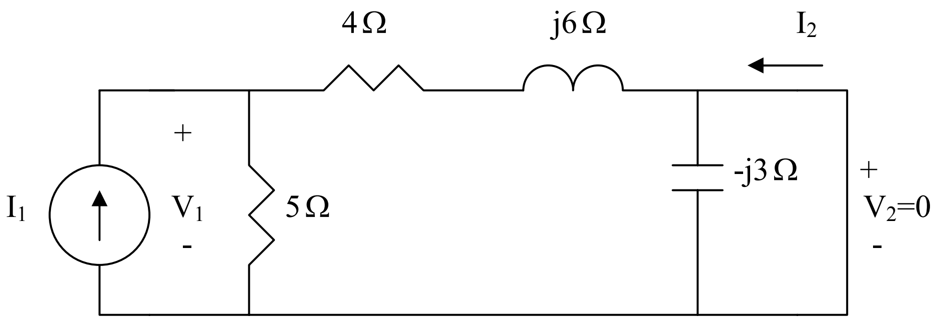

$$V_1 = 5//(4 + j6)I_1 = \frac{5(4 + j6)I_1}{9 + j6} \qquad h_{11} = \frac{V_1}{I_1} = 3.0769 + j1.2821$$

Also, $I_2 = -\frac{5}{9 + j6} I_1 \quad \longrightarrow \quad h_{21} = \frac{I_2}{I_1} = -0.3846 + j0.2564$

To get h_{22} and h_{12}, consider the circuit below.

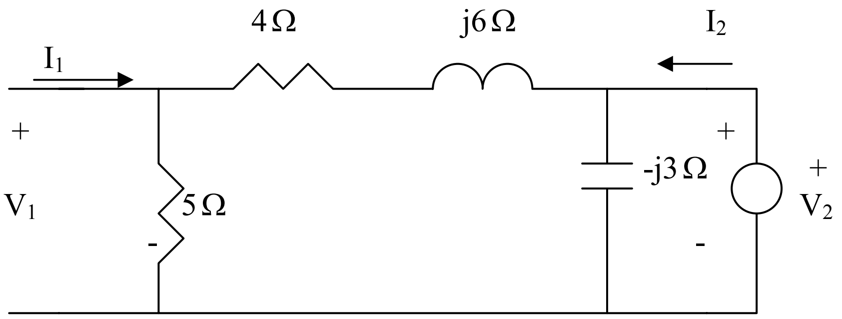

$$V_1 = \frac{5}{9 + j6} V_2 \quad \longrightarrow \quad h_{12} = \frac{V_1}{V_2} = \frac{5}{9 + j6} = 0.3846 - j0.2564$$

$$V_2 = -j3//(9 + j6)I_2 \quad \longrightarrow \quad h_{22} = \frac{I_2}{V_2} = \frac{1}{-j3//(9 + j6)} = \frac{9 + j3}{-j3(9 + j6)}$$
$$= 0.0769 + j0.2821$$

Thus,

$$[h] = \begin{bmatrix} 3.0769 + j1.2821 & 0.3846 - j0.2564 \\ -0.3846 + j0.2564 & 0.0769 + j0.2821 \end{bmatrix}$$

Chapter 19, Solution 34.

Refer to Fig. (a) to get $\mathbf{h}_{11}$ and $\mathbf{h}_{21}$.

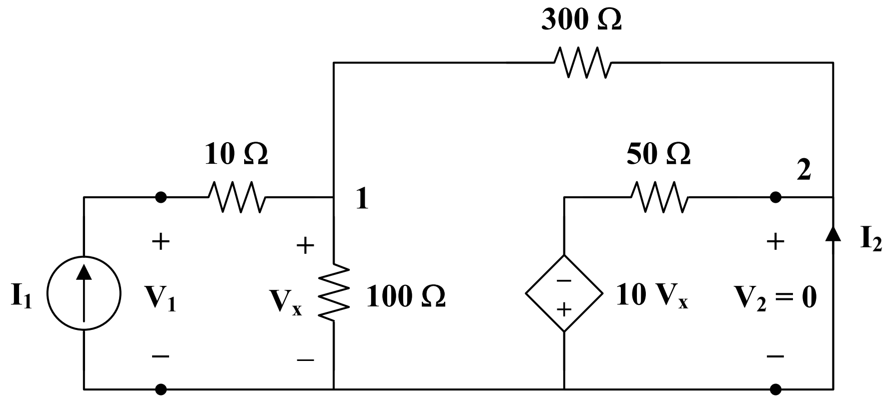

(a)

At node 1,

$$\mathbf{I}_1 = \frac{\mathbf{V}_x}{100} + \frac{\mathbf{V}_x - 0}{300} \longrightarrow 300\mathbf{I}_1 = 4\mathbf{V}_x \qquad (1)$$

$$\mathbf{V}_x = \frac{300}{4}\mathbf{I}_1 = 75\mathbf{I}_1$$

But $\quad \mathbf{V}_1 = 10\mathbf{I}_1 + \mathbf{V}_x = 85\mathbf{I}_1 \longrightarrow \mathbf{h}_{11} = \dfrac{\mathbf{V}_1}{\mathbf{I}_1} = 85\,\Omega$

At node 2,

$$\mathbf{I}_2 = \frac{0 + 10\mathbf{V}_x}{50} - \frac{\mathbf{V}_x}{300} = \frac{\mathbf{V}_x}{5} - \frac{\mathbf{V}_x}{300} = \frac{75}{5}\mathbf{I}_1 - \frac{75}{300}\mathbf{I}_1 = 14.75\mathbf{I}_1$$

$$\mathbf{h}_{21} = \frac{\mathbf{I}_2}{\mathbf{I}_1} = 14.75$$

To get $\mathbf{h}_{22}$ and $\mathbf{h}_{12}$, refer to Fig. (b).

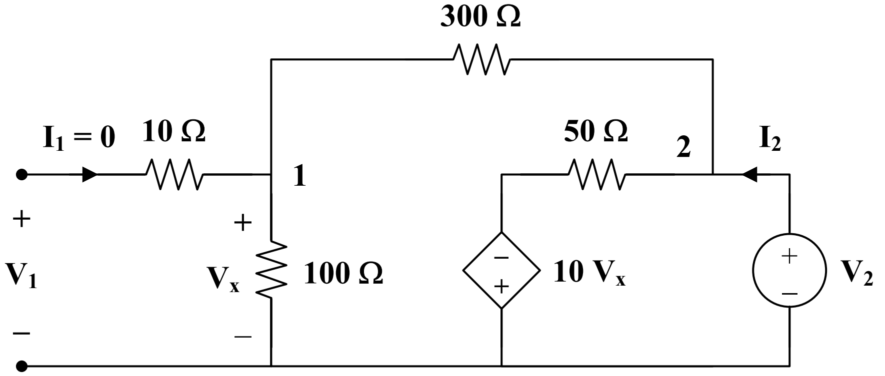

(b)

At node 2,

$$\mathbf{I}_2 = \frac{\mathbf{V}_2}{400} + \frac{\mathbf{V}_2 + 10\mathbf{V}_x}{50} \longrightarrow 400\mathbf{I}_2 = 9\mathbf{V}_2 + 80\mathbf{V}_x$$

But $\mathbf{V}_x = \frac{100}{400}\mathbf{V}_2 = \frac{\mathbf{V}_2}{4}$

Hence, $400\mathbf{I}_2 = 9\mathbf{V}_2 + 20\mathbf{V}_2 = 29\mathbf{V}_2$

$$\mathbf{h}_{22} = \frac{\mathbf{I}_2}{\mathbf{V}_2} = \frac{29}{400} = 0.0725 \text{ S}$$

$$\mathbf{V}_1 = \mathbf{V}_x = \frac{\mathbf{V}_2}{4} \longrightarrow \mathbf{h}_{12} = \frac{\mathbf{V}_1}{\mathbf{V}_2} = \frac{1}{4} = 0.25$$

$$[\mathbf{h}] = \underline{\begin{bmatrix} \mathbf{85\,\Omega} & \mathbf{0.25} \\ \mathbf{14.75} & \mathbf{0.0725\ S} \end{bmatrix}}$$

To get $\mathbf{g}_{11}$ and $\mathbf{g}_{21}$, refer to Fig. (c).

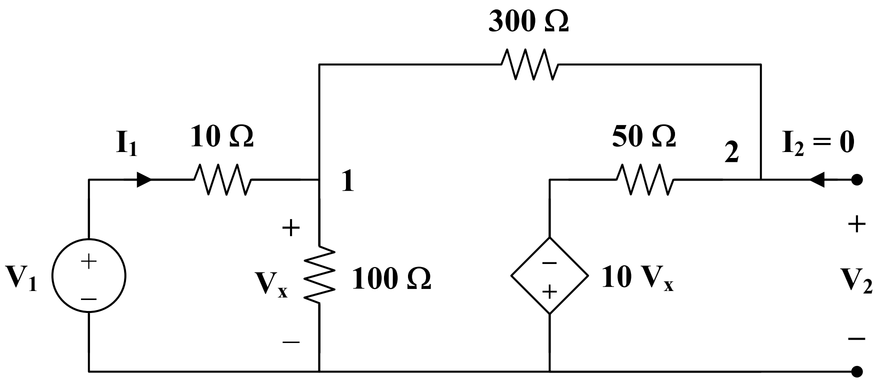

(c)

At node 1,

$$\mathbf{I}_1 = \frac{\mathbf{V}_x}{100} + \frac{\mathbf{V}_x + 10\mathbf{V}_x}{350} \longrightarrow 350\mathbf{I}_1 = 14.5\mathbf{V}_x \qquad (2)$$

But $\mathbf{I}_1 = \frac{\mathbf{V}_1 - \mathbf{V}_x}{10} \longrightarrow 10\mathbf{I}_1 = \mathbf{V}_1 - \mathbf{V}_x$

or $\mathbf{V}_x = \mathbf{V}_1 - 10\mathbf{I}_1 \qquad (3)$

Substituting (3) into (2) gives

$$350\mathbf{I}_1 = 14.5\mathbf{V}_1 - 145\mathbf{I}_1 \longrightarrow 495\mathbf{I}_1 = 14.5\mathbf{V}_1$$

$$\mathbf{g}_{11} = \frac{\mathbf{I}_1}{\mathbf{V}_1} = \frac{14.5}{495} = 0.02929 \text{ S}$$

At node 2,

$$\mathbf{V}_2 = (50)\left(\frac{11}{350}\mathbf{V}_x\right) - 10\mathbf{V}_x = \text{-}8.4286\mathbf{V}_x$$

$$= \text{-}8.4286\mathbf{V}_1 + 84.286\mathbf{I}_1 = \text{-}8.4286\mathbf{V}_1 + (84.286)\left(\frac{14.5}{495}\right)\mathbf{V}_1$$

$$\mathbf{V}_2 = \text{-}5.96\mathbf{V}_1 \longrightarrow \mathbf{g}_{21} = \frac{\mathbf{V}_2}{\mathbf{V}_1} = \text{-}5.96$$

To get $\mathbf{g}_{22}$ and $\mathbf{g}_{12}$, refer to Fig. (d).

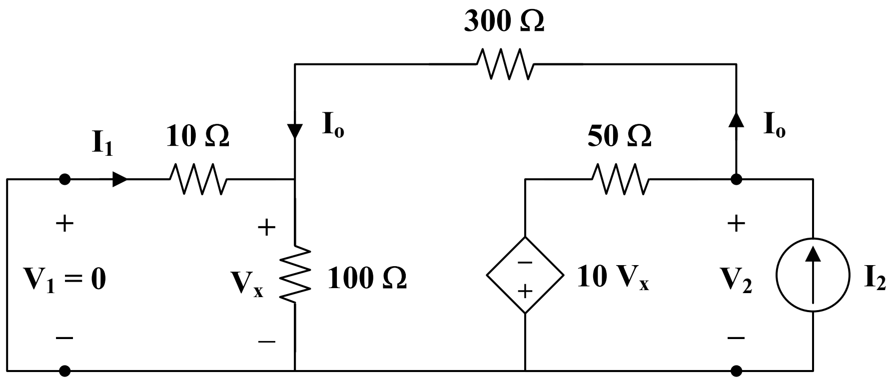

(d)

$$10 \,||\, 100 = 9.091$$

$$\mathbf{I}_2 = \frac{\mathbf{V}_2 + 10\mathbf{V}_x}{50} + \frac{\mathbf{V}_2}{300 + 9.091}$$

$$309.091\mathbf{I}_2 = 7.1818\mathbf{V}_2 + 61.818\mathbf{V}_x \qquad (4)$$

But $$\mathbf{V}_x = \frac{9.091}{309.091}\mathbf{V}_2 = 0.02941\mathbf{V}_2 \qquad (5)$$

Substituting (5) into (4) gives

$$309.091\mathbf{I}_2 = 9\mathbf{V}_2$$

$$\mathbf{g}_{22} = \frac{\mathbf{V}_2}{\mathbf{I}_2} = 34.34\ \Omega$$

$$\mathbf{I}_o = \frac{\mathbf{V}_2}{309.091} = \frac{34.34\mathbf{I}_2}{309.091}$$

$$\mathbf{I}_1 = \frac{-100}{110}\mathbf{I}_o = \frac{-34.34\mathbf{I}_2}{(1.1)(309.091)}$$

$$\mathbf{g}_{12} = \frac{\mathbf{I}_1}{\mathbf{I}_2} = -0.101$$

Thus,

$$[\mathbf{g}] = \underline{\begin{bmatrix} \mathbf{0.02929\ S} & \mathbf{-0.101} \\ \mathbf{-5.96} & \mathbf{34.34\ \Omega} \end{bmatrix}}$$

Chapter 19, Solution 35.

To get $\mathbf{h}_{11}$ and $\mathbf{h}_{21}$ consider the circuit in Fig. (a).

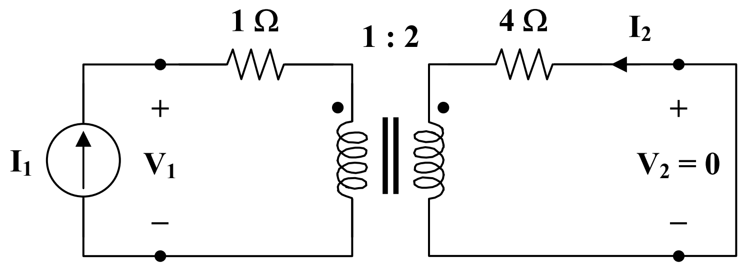

(a)

$$Z_R = \frac{4}{n^2} = \frac{4}{4} = 1$$

$$\mathbf{V}_1 = (1+1)\mathbf{I}_1 = 2\mathbf{I}_1 \longrightarrow \mathbf{h}_{11} = \frac{\mathbf{V}_1}{\mathbf{I}_1} = 2\ \Omega$$

$$\frac{\mathbf{I}_1}{\mathbf{I}_2} = \frac{-N_2}{N_1} = -2 \longrightarrow \mathbf{h}_{21} = \frac{\mathbf{I}_2}{\mathbf{I}_1} = \frac{-1}{2} = -0.5$$

To get $\mathbf{h}_{22}$ and $\mathbf{h}_{12}$, refer to Fig. (b).

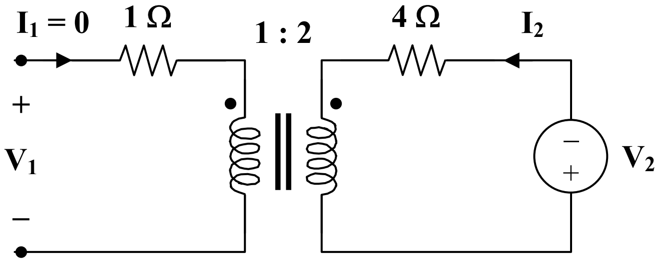

(b)

Since $\mathbf{I}_1 = 0$, $\mathbf{I}_2 = 0$.
Hence, $\mathbf{h}_{22} = 0$.

At the terminals of the transformer, we have $\mathbf{V}_1$ and $\mathbf{V}_2$ which are related as

$$\frac{\mathbf{V}_2}{\mathbf{V}_1} = \frac{N_2}{N_1} = n = 2 \longrightarrow \mathbf{h}_{12} = \frac{\mathbf{V}_1}{\mathbf{V}_2} = \frac{1}{2} = 0.5$$

Thus,

$$[\mathbf{h}] = \begin{bmatrix} \mathbf{2\,\Omega} & \mathbf{0.5} \\ \mathbf{-0.5} & \mathbf{0} \end{bmatrix}$$

Chapter 19, Solution 36.

We replace the two-port by its equivalent circuit as shown below.

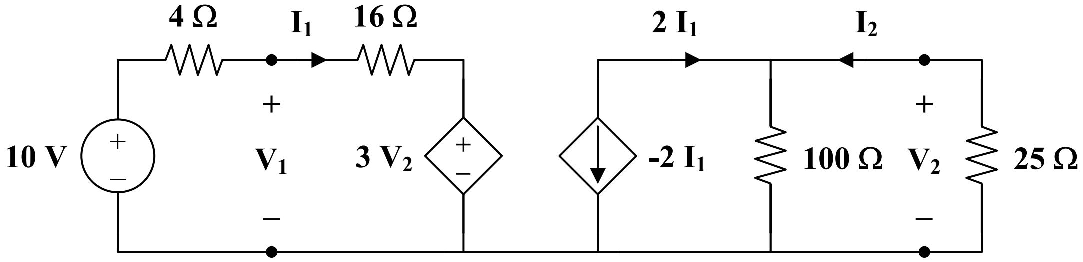

$$100 \,||\, 25 = 20\,\Omega$$

$$\mathbf{V}_2 = (20)(2\mathbf{I}_1) = 40\mathbf{I}_1 \qquad (1)$$

$$-10 + 20\mathbf{I}_1 + 3\mathbf{V}_2 = 0$$
$$10 = 20\mathbf{I}_1 + (3)(40\mathbf{I}_1) = 140\mathbf{I}_1$$

$$\mathbf{I}_1 = \frac{1}{14}, \qquad \mathbf{V}_2 = \frac{40}{14}$$

$$\mathbf{V}_1 = 16\mathbf{I}_1 + 3\mathbf{V}_2 = \frac{136}{14}$$

$$\mathbf{I}_2 = \left(\frac{100}{125}\right)(2\mathbf{I}_1) = \frac{-8}{70}$$

(a) $\frac{\mathbf{V}_2}{\mathbf{V}_1} = \frac{40}{136} = \underline{\mathbf{0.2941}}$

(b) $\frac{\mathbf{I}_2}{\mathbf{I}_1} = \underline{\mathbf{-1.6}}$

(c) $\frac{\mathbf{I}_1}{\mathbf{V}_1} = \frac{1}{136} = \underline{\mathbf{7.353 \times 10^{-3}\ S}}$

(d) $\frac{\mathbf{V}_2}{\mathbf{I}_1} = \frac{40}{1} = \underline{\mathbf{40\,\Omega}}$

Chapter 19, Solution 37.

(a) We first obtain the h parameters. To get $\mathbf{h}_{11}$ and $\mathbf{h}_{21}$ refer to Fig. (a).

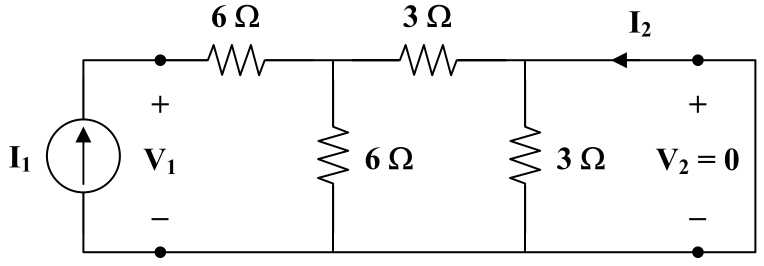

(a)

$$3 \,||\, 6 = 2$$

$$\mathbf{V}_1 = (6+2)\mathbf{I}_1 = 8\mathbf{I}_1 \longrightarrow \mathbf{h}_{11} = \frac{\mathbf{V}_1}{\mathbf{I}_1} = 8\,\Omega$$

$$\mathbf{I}_2 = \frac{-6}{3+6}\mathbf{I}_1 = \frac{-2}{3}\mathbf{I}_1 \longrightarrow \mathbf{h}_{21} = \frac{\mathbf{I}_2}{\mathbf{I}_1} = \frac{-2}{3}$$

To get $\mathbf{h}_{22}$ and $\mathbf{h}_{12}$, refer to the circuit in Fig. (b).

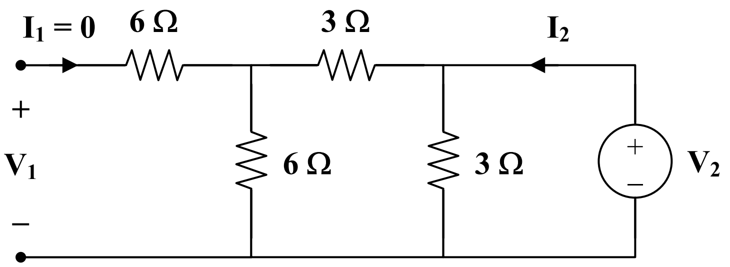

(b)

$$3 \,||\, 9 = \frac{9}{4}$$

$$\mathbf{V}_2 = \frac{9}{4}\mathbf{I}_2 \longrightarrow \mathbf{h}_{22} = \frac{\mathbf{I}_2}{\mathbf{V}_2} = \frac{4}{9}$$

$$\mathbf{V}_1 = \frac{6}{6+3}\mathbf{V}_2 = \frac{2}{3}\mathbf{V}_2 \longrightarrow \mathbf{h}_{12} = \frac{\mathbf{V}_1}{\mathbf{V}_2} = \frac{2}{3}$$

$$[\mathbf{h}] = \begin{bmatrix} 8\,\Omega & \frac{2}{3} \\ \frac{-2}{3} & \frac{4}{9}\,\text{S} \end{bmatrix}$$

The equivalent circuit of the given circuit is shown in Fig. (c).

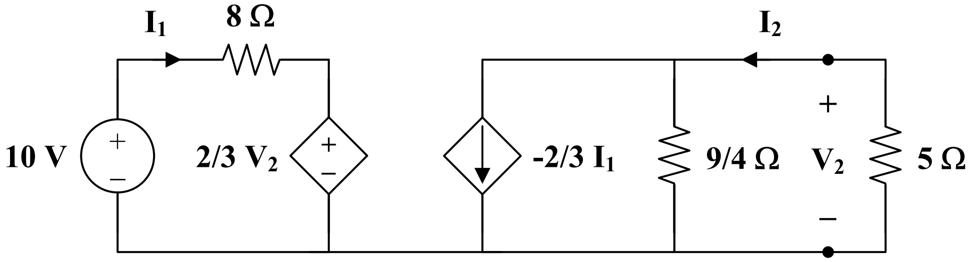

(c)

$$8\mathbf{I}_1 + \frac{2}{3}\mathbf{V}_2 = 10 \qquad (1)$$

$$\mathbf{V}_2 = \frac{2}{3}\mathbf{I}_1\left(5 \,||\, \frac{9}{4}\right) = \frac{2}{3}\mathbf{I}_1\left(\frac{45}{29}\right) = \frac{30}{29}\mathbf{I}_1$$

$$\mathbf{I}_1 = \frac{29}{30}\mathbf{V}_2 \qquad (2)$$

Substituting (2) into (1),

$$(8)\left(\frac{29}{30}\right)\mathbf{V}_2 + \frac{2}{3}\mathbf{V}_2 = 10$$

$$\mathbf{V}_2 = \frac{300}{252} = \underline{\mathbf{1.19\ V}}$$

(b) By direct analysis, refer to Fig.(d).

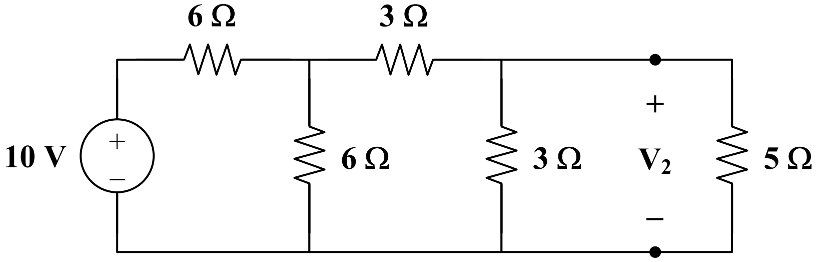

(d)

Transform the 10-V voltage source to a $\frac{10}{6}$-A current source. Since $6 \,||\, 6 = 3\ \Omega$, we combine the two 6-Ω resistors in parallel and transform the current source back to $\frac{10}{6} \times 3 = 5\ \text{V}$ voltage source shown in Fig. (e).

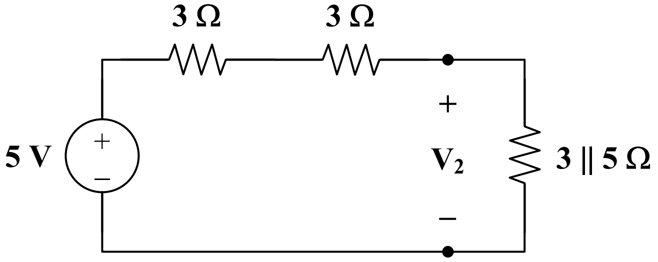

(e)

$$3 \,||\, 5 = \frac{(3)(5)}{8} = \frac{15}{8}$$

$$\mathbf{V}_2 = \frac{15/8}{6+15/8}(5) = \frac{75}{63} = \underline{\mathbf{1.19\ V}}$$

Chapter 19, Solution 38.

We replace the two-port by its equivalent circuit as shown below.

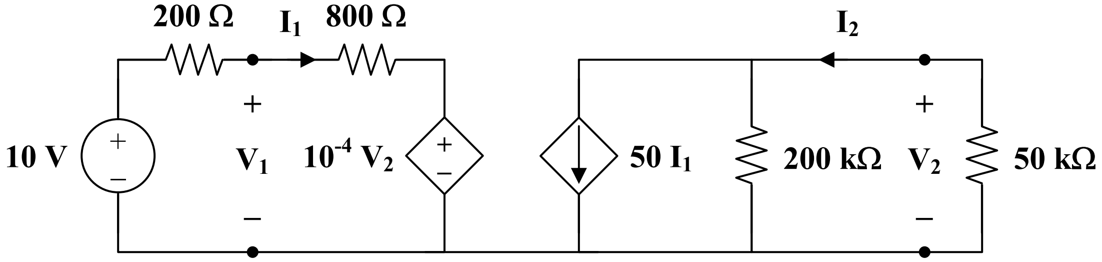

$$\mathbf{Z}_{in} = \frac{\mathbf{V}_s}{\mathbf{I}_1}, \qquad 200 \,||\, 50 = 40\ \text{k}\Omega$$

$$\mathbf{V}_2 = \text{-}50\mathbf{I}_1(40\times10^3) = (\text{-}2\times10^6)\mathbf{I}_1$$

For the left loop,

$$\frac{\mathbf{V}_s - 10^{-4}\,\mathbf{V}_2}{1000} = \mathbf{I}_1$$

$$\mathbf{V}_s - 10^{-4}(\text{-}2\times10^6\,\mathbf{I}_1) = 1000\mathbf{I}_1$$

$$\mathbf{V}_s = 1000\mathbf{I}_1 - 200\mathbf{I}_1 = 800\mathbf{I}_1$$

$$\mathbf{Z}_{in} = \frac{\mathbf{V}_s}{\mathbf{I}_1} = \underline{\mathbf{800\ \Omega}}$$

Alternatively,

$$\mathbf{Z}_{in} = \mathbf{Z}_s + \mathbf{h}_{11} - \frac{\mathbf{h}_{12}\,\mathbf{h}_{21}\,\mathbf{Z}_L}{1+\mathbf{h}_{22}\,\mathbf{Z}_L}$$

$$\mathbf{Z}_{in} = 200 + 800 - \frac{(10^{-4})(50)(50\times10^3)}{1+(0.5\times10^{-5})(50\times10^3)} = \underline{\mathbf{800\ \Omega}}$$

Chapter 19, Solution 39.

To get g_{11} and g_{21}, consider the circuit below which is partly obtained by converting the delta to wye subnetwork.

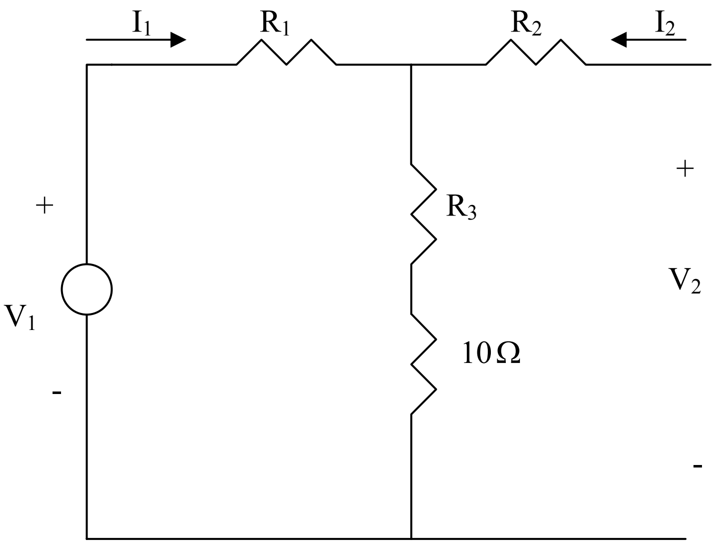

$$R_1 = \frac{4x8}{8+8+4} = 1.6 = R_2, \quad R_3 = \frac{8x8}{20} = 3.2$$

$$V_2 = \frac{13.2}{13.2+1.6}V_1 = 0.8919V_1 \longrightarrow g_{21} = \frac{V_2}{V_1} = 0.8919$$

$$V_1 = I_1(1.6+3.2+10) = 14.8I_1 \longrightarrow g_{11} = \frac{I_1}{V_1} = \frac{1}{14.8} = 0.06757$$

To get g_{22} and g_{12}, consider the circuit below.

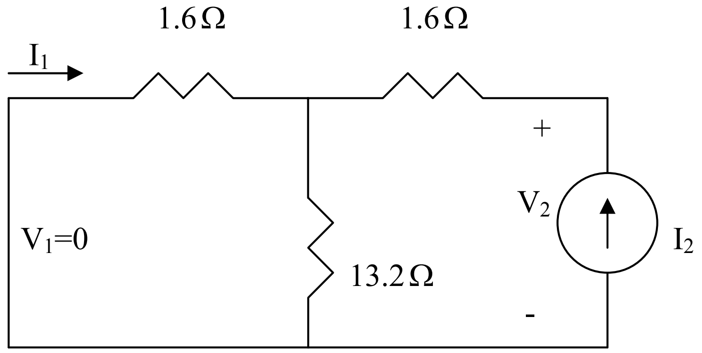

$$I_1 = -\frac{13.2}{13.2+1.6} I_2 = -0.8919 I_2 \longrightarrow g_{12} = \frac{I_1}{I_2} = -0.8919$$

$$V_2 = I_2(1.6 + 13.2//1.6) = 3.027 I_2 \longrightarrow g_{22} = \frac{V_2}{I_2} = 3.027$$

$$[g] = \begin{bmatrix} 0.06757 & -0.8919 \\ 0.8919 & 3.027 \end{bmatrix}$$

Chapter 19, Solution 40.

To get $\mathbf{g}_{11}$ and $\mathbf{g}_{21}$, consider the circuit in Fig. (a).

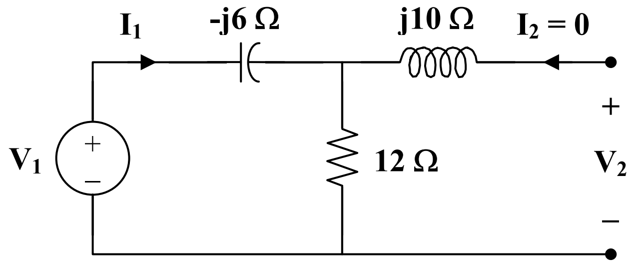

(a)

$$\mathbf{V}_1 = (12 - j6)\mathbf{I}_1 \longrightarrow \mathbf{g}_{11} = \frac{\mathbf{I}_1}{\mathbf{V}_1} = \frac{1}{12 - j6} = 0.0667 + j0.0333 \text{ S}$$

$$\mathbf{g}_{21} = \frac{\mathbf{V}_2}{\mathbf{V}_1} = \frac{12\mathbf{I}_1}{(12 - j6)\mathbf{I}_1} = \frac{2}{2 - j} = 0.8 + j0.4$$

To get $\mathbf{g}_{12}$ and $\mathbf{g}_{22}$, consider the circuit in Fig. (b).

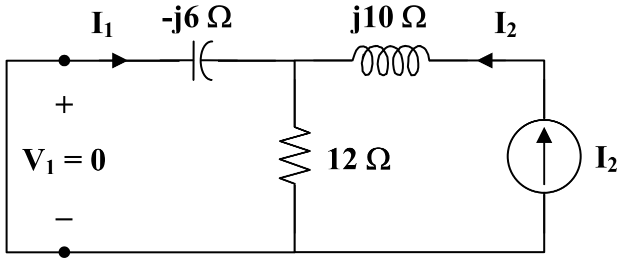

(b)

$$\mathbf{I}_1 = \frac{-12}{12 - j6}\mathbf{I}_2 \longrightarrow \mathbf{g}_{12} = \frac{\mathbf{I}_1}{\mathbf{I}_2} = \frac{-12}{12 - j6} = -\mathbf{g}_{21} = -0.8 - j0.4$$

$$\mathbf{V}_2 = (j10 + 12 \,||\, -j6)\mathbf{I}_2$$

$$\mathbf{g}_{22} = \frac{\mathbf{V}_2}{\mathbf{I}_2} = j10 + \frac{(12)(-j6)}{12 - j6} = 2.4 + j5.2\ \Omega$$

$$[\mathbf{g}] = \underline{\begin{bmatrix} \mathbf{0.0667 + j0.0333\ S} & \mathbf{-0.8 - j0.4} \\ \mathbf{0.8 + j0.4} & \mathbf{2.4 + j5.2\ \Omega} \end{bmatrix}}$$

Chapter 19, Solution 41.

For the g parameters

$$\mathbf{I}_1 = \mathbf{g}_{11}\mathbf{V}_1 + \mathbf{g}_{12}\mathbf{I}_2 \qquad (1)$$

$$\mathbf{V}_2 = \mathbf{g}_{21}\mathbf{V}_1 + \mathbf{g}_{22}\mathbf{I}_2 \qquad (2)$$

But $\mathbf{V}_1 = \mathbf{V}_s - \mathbf{I}_1\mathbf{Z}_s$ and

$$\mathbf{V}_2 = -\mathbf{I}_2\mathbf{Z}_L = \mathbf{g}_{21}\mathbf{V}_1 + \mathbf{g}_{22}\mathbf{I}_2$$

$$0 = \mathbf{g}_{21}\mathbf{V}_1 + (\mathbf{g}_{22} + \mathbf{Z}_L)\mathbf{I}_2$$

or

$$\mathbf{V}_1 = \frac{-(\mathbf{g}_{22} + \mathbf{Z}_L)}{\mathbf{g}_{21}}\mathbf{I}_2$$

Substituting this into (1),

$$\mathbf{I}_1 = \frac{(\mathbf{g}_{22}\mathbf{g}_{11} + \mathbf{Z}_L\mathbf{g}_{11} - \mathbf{g}_{21}\mathbf{g}_{12})}{-\mathbf{g}_{21}}\mathbf{I}_2$$

or

$$\underline{\frac{\mathbf{I}_2}{\mathbf{I}_1} = \frac{-\mathbf{g}_{21}}{\mathbf{g}_{11}\mathbf{Z}_L + \Delta_g}}$$

Also,

$$\mathbf{V}_2 = \mathbf{g}_{21}(\mathbf{V}_s - \mathbf{I}_1\mathbf{Z}_s) + \mathbf{g}_{22}\mathbf{I}_2$$

$$= \mathbf{g}_{21}\mathbf{V}_s - \mathbf{g}_{21}\mathbf{Z}_s\mathbf{I}_1 + \mathbf{g}_{22}\mathbf{I}_2$$

$$= \mathbf{g}_{21}\mathbf{V}_s + \mathbf{Z}_s(\mathbf{g}_{11}\mathbf{Z}_L + \Delta_g)\mathbf{I}_2 + \mathbf{g}_{22}\mathbf{I}_2$$

But

$$\mathbf{I}_2 = \frac{-\mathbf{V}_2}{\mathbf{Z}_L}$$

$$\mathbf{V}_2 = \mathbf{g}_{21}\,\mathbf{V}_s - [\mathbf{g}_{11}\,\mathbf{Z}_s\,\mathbf{Z}_L + \Delta_g\,\mathbf{Z}_s + \mathbf{g}_{22}]\left[\frac{\mathbf{V}_2}{\mathbf{Z}_L}\right]$$

$$\frac{\mathbf{V}_2\,[\mathbf{Z}_L + \mathbf{g}_{11}\,\mathbf{Z}_s\,\mathbf{Z}_L + \Delta_g\,\mathbf{Z}_s + \mathbf{g}_{22}]}{\mathbf{Z}_L} = \mathbf{g}_{21}\,\mathbf{V}_s$$

$$\frac{\mathbf{V}_2}{\mathbf{V}_s} = \frac{\mathbf{g}_{21}\,\mathbf{Z}_L}{\mathbf{Z}_L + \mathbf{g}_{11}\,\mathbf{Z}_s\,\mathbf{Z}_L + \Delta_g\,\mathbf{Z}_s + \mathbf{g}_{22}}$$

$$\frac{\mathbf{V}_2}{\mathbf{V}_s} = \frac{\mathbf{g}_{21}\,\mathbf{Z}_L}{\mathbf{Z}_L + \mathbf{g}_{11}\,\mathbf{Z}_s\,\mathbf{Z}_L + \mathbf{g}_{11}\,\mathbf{g}_{22}\,\mathbf{Z}_s - \mathbf{g}_{21}\,\mathbf{g}_{12}\,\mathbf{Z}_s + \mathbf{g}_{22}}$$

$$\frac{\mathbf{V}_2}{\mathbf{V}_s} = \underline{\frac{\mathbf{g}_{21}\,\mathbf{Z}_L}{(1+\mathbf{g}_{11}\,\mathbf{Z}_s)(\mathbf{g}_{22}+\mathbf{Z}_L) - \mathbf{g}_{12}\,\mathbf{g}_{21}\,\mathbf{Z}_s}}$$

Chapter 19, Solution 42.

(a) **<u>The network is shown in Fig. (a)</u>.**

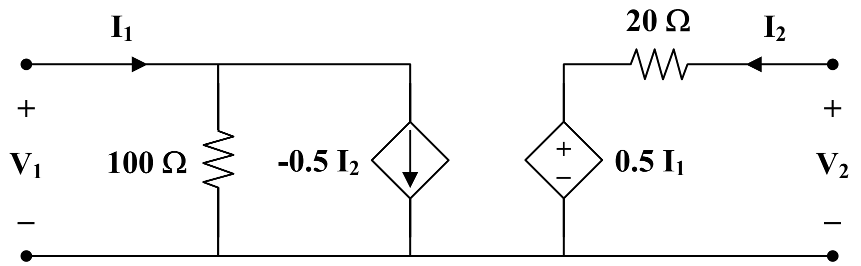

(a)

(b) **<u>The network is shown in Fig. (b)</u>.**

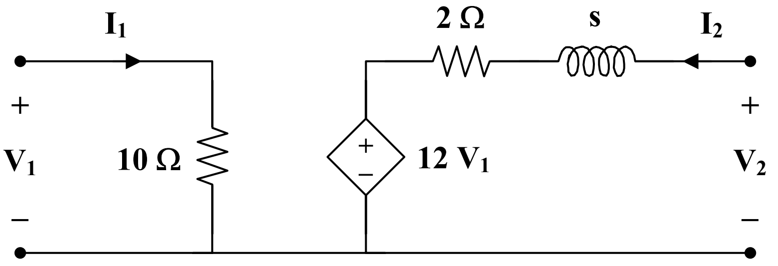

(b)

Chapter 19, Solution 43.

(a) To find $\mathbf{A}$ and $\mathbf{C}$, consider the network in Fig. (a).

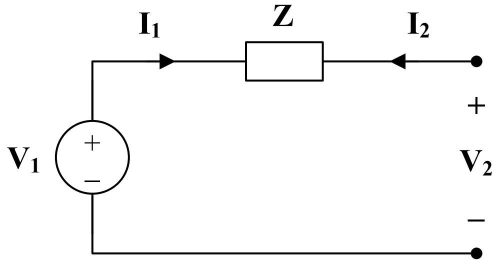

(a)

$$\mathbf{V}_1 = \mathbf{V}_2 \longrightarrow \mathbf{A} = \frac{\mathbf{V}_1}{\mathbf{V}_2} = 1$$

$$\mathbf{I}_1 = 0 \longrightarrow \mathbf{C} = \frac{\mathbf{I}_1}{\mathbf{V}_2} = 0$$

To get $\mathbf{B}$ and $\mathbf{D}$, consider the circuit in Fig. (b).

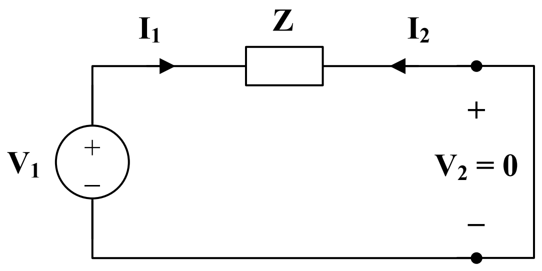

(b)

$$\mathbf{V}_1 = \mathbf{Z}\mathbf{I}_1, \qquad \mathbf{I}_2 = -\mathbf{I}_1$$

$$\mathbf{B} = \frac{-\mathbf{V}_1}{\mathbf{I}_2} = \frac{-\mathbf{Z}\mathbf{I}_1}{-\mathbf{I}_1} = \mathbf{Z}$$

$$\mathbf{D} = \frac{-\mathbf{I}_1}{\mathbf{I}_2} = 1$$

Hence,

$$[\mathbf{T}] = \underline{\begin{bmatrix} \mathbf{1} & \mathbf{Z} \\ \mathbf{0} & \mathbf{1} \end{bmatrix}}$$

(b) To find $\mathbf{A}$ and $\mathbf{C}$, consider the circuit in Fig. (c).

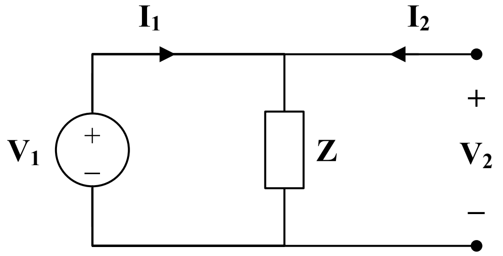

(c)

$$\mathbf{V}_1 = \mathbf{V}_2 \longrightarrow \mathbf{A} = \frac{\mathbf{V}_1}{\mathbf{V}_2} = 1$$

$$\mathbf{V}_1 = \mathbf{Z}\mathbf{I}_1 = \mathbf{V}_2 \longrightarrow \mathbf{C} = \frac{\mathbf{I}_1}{\mathbf{V}_2} = \frac{1}{\mathbf{Z}} = \mathbf{Y}$$

To get $\mathbf{B}$ and $\mathbf{D}$, refer to the circuit in Fig.(d).

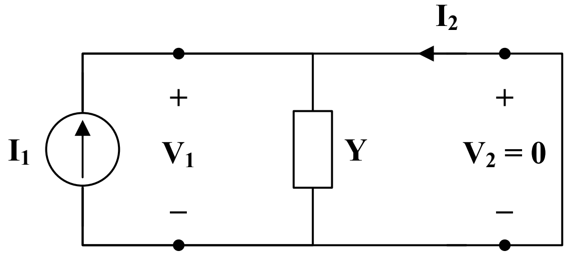

(d)

$$\mathbf{V}_1 = \mathbf{V}_2 = 0 \qquad \mathbf{I}_2 = -\mathbf{I}_1$$

$$\mathbf{B} = \frac{-\mathbf{V}_1}{\mathbf{I}_2} = 0, \qquad \mathbf{D} = \frac{-\mathbf{I}_1}{\mathbf{I}_2} = 1$$

Thus,

$$[\mathbf{T}] = \underline{\begin{bmatrix} \mathbf{1} & \mathbf{0} \\ \mathbf{Y} & \mathbf{1} \end{bmatrix}}$$

Chapter 19, Solution 44.

To determine $\mathbf{A}$ and $\mathbf{C}$, consider the circuit in Fig.(a).

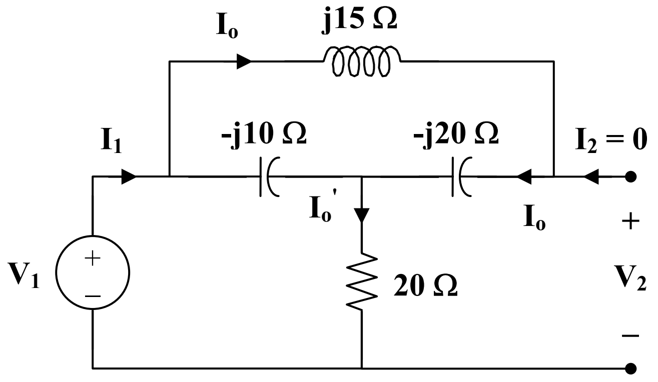

(a)

$$\mathbf{V}_1 = [\,20 + (\text{-j}10)\,||\,(\text{j}15 - \text{j}20)\,]\,\mathbf{I}_1$$

$$\mathbf{V}_1 = \left[20 + \frac{(\text{-j}10)(\text{-j}5)}{\text{-}\,\text{j}15}\right]\mathbf{I}_1 = \left[20 - \text{j}\frac{10}{3}\right]\mathbf{I}_1$$

$$\mathbf{I}_o{}' = \mathbf{I}_1$$

$$\mathbf{I}_o = \left(\frac{\text{-}\,\text{j}10}{\text{-}\,\text{j}10 - \text{j}5}\right)\mathbf{I}_1 = \left(\frac{2}{3}\right)\mathbf{I}_1$$

$$\mathbf{V}_2 = (\text{-j}20)\,\mathbf{I}_o + 20\,\mathbf{I}_o{}' \;=\; -\text{j}\frac{40}{3}\mathrm{I}_1 + 20\mathrm{I}_1 \;=\; \left(20 - \text{j}\frac{40}{3}\right)\mathrm{I}_1$$

$$\mathbf{A} = \frac{\mathbf{V}_1}{\mathbf{V}_2} = \frac{(20 - \text{j}10/3)\,\mathbf{I}_1}{\left(20 - \text{j}\dfrac{40}{3}\right)\mathrm{I}_1} = 0.7692 + \text{j}0.3461$$

$$\mathbf{C} = \frac{\mathbf{I}_1}{\mathbf{V}_2} = \frac{1}{20 - \text{j}\dfrac{40}{3}} = \;0.03461 + \text{j}0.023$$

To find $\mathbf{B}$ and $\mathbf{D}$, consider the circuit in Fig. (b).

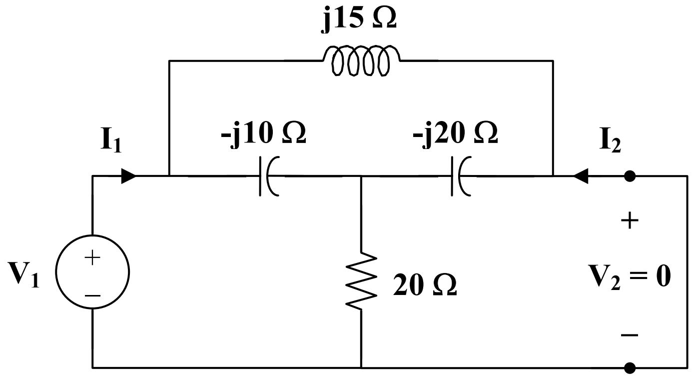

(b)

We may transform the Δ subnetwork to a T as shown in Fig. (c).

$$\mathbf{Z}_1 = \frac{(j15)(-j10)}{j15 - j10 - j20} = j10$$

$$\mathbf{Z}_2 = \frac{(-j10)(-j20)}{-j15} = -j\frac{40}{3}$$

$$\mathbf{Z}_3 = \frac{(j15)(-j20)}{-j15} = j20$$

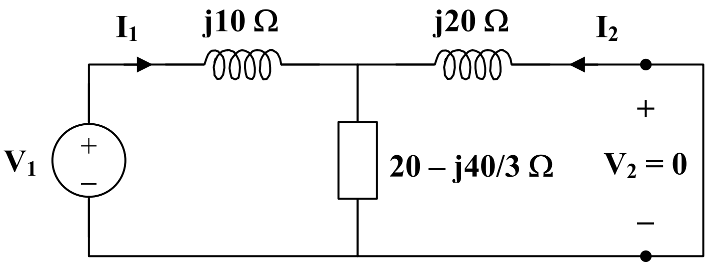

(c)

$$-\mathbf{I}_2 = \frac{20 - j40/3}{20 - j40/3 + j20}\mathbf{I}_1 = \frac{3 - j2}{3 + j}\mathbf{I}_1$$

$$\mathbf{D} = \frac{-\mathbf{I}_1}{\mathbf{I}_2} = \frac{3 + j}{3 - j2} = 0.5385 + j0.6923$$

$$\mathbf{V}_1 = \left[j10 + \frac{(j20)(20 - j40/3)}{20 - j40/3 + j20} \right]\mathbf{I}_1$$

$$\mathbf{V}_1 = [\,j10 + 2(9 + j7)\,]\mathbf{I}_1 = j\mathbf{I}_1(24 - j18)$$

$$\mathbf{B} = \frac{-\mathbf{V}_1}{\mathbf{I}_2} = \frac{-j\mathbf{I}_1(24 - j18)}{\frac{-(3 - j2)}{3 + j}\mathbf{I}_1} = \frac{6}{13}(-15 + j55)$$

$$\mathbf{B} = -6.923 + j25.385\,\Omega$$

$$[\mathbf{T}] = \underline{\begin{bmatrix} \mathbf{0.7692 + j0.3461} & \mathbf{-6.923 + j25.385\,\Omega} \\ \mathbf{0.03461 + j0.023\ S} & \mathbf{0.5385 + j0.6923} \end{bmatrix}}$$

Chapter 19, Solution 45.

To obtain A and C, consider the circuit below.

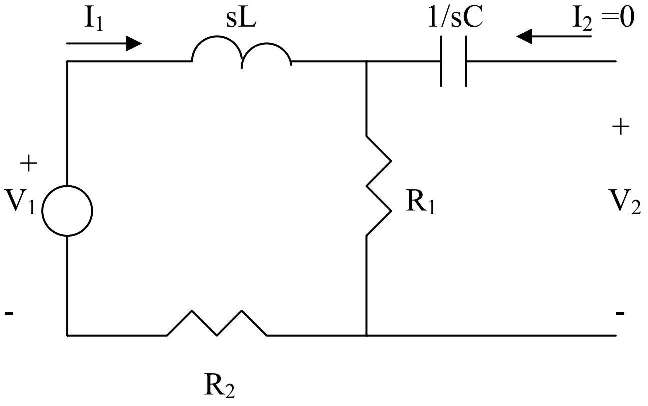

$$V_2 = \frac{R_1}{R_1 + R_2 + sL}V_1 \longrightarrow A = \frac{V_1}{V_2} = \underline{\frac{R_1 + R_2 + sL}{R_1}}$$

$$V_2 = I_1 R_1 \longrightarrow \underline{C = \frac{I_1}{V_2} = \frac{1}{R_1}}$$

To obtain B and D, consider the circuit below.

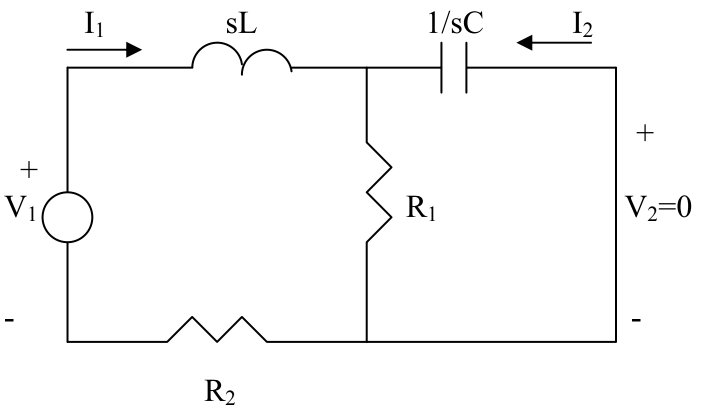

$$I_2 = -\frac{R_1}{R_1 + \frac{1}{sC}} I_1 = -\frac{sR_1C}{1 + sR_1C} I_1 \longrightarrow \underline{D = -\frac{I_1}{I_2} = \frac{1 + sR_1C}{sR_1C}}$$

$$V_1 = \left(R_2 + sL + \frac{\frac{R_1}{sC}}{R_1 + \frac{1}{sC}} \right) I_1 = -\frac{\left[(1 + sR_1C)(R_2 + sL) + R_1\right]}{1 + sR_1C} \frac{(1 + sR_1C)}{sR_{1C}} I_2$$

$$B = -\frac{V_1}{I_2} = \underline{\frac{1}{sR_1C}\left[R_1 + (1 + sR_1C)(R_2 + sL)\right]}$$

Chapter 19, Solution 46.

To get $\mathbf{A}$ and $\mathbf{C}$, refer to the circuit in Fig.(a).

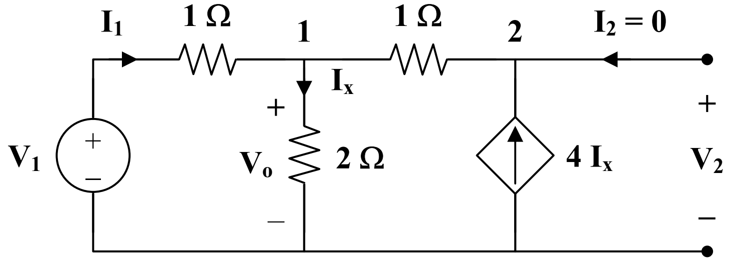

(a)

At node 1,

$$\mathbf{I}_1 = \frac{\mathbf{V}_o}{2} + \frac{\mathbf{V}_o - \mathbf{V}_2}{1} \longrightarrow 2\mathbf{I}_1 = 3\mathbf{V}_o - 2\mathbf{V}_2 \qquad (1)$$

At node 2,

$$\frac{\mathbf{V}_o - \mathbf{V}_2}{1} = 4\mathbf{I}_x = \frac{4\mathbf{V}_o}{2} = 2\mathbf{V}_o \longrightarrow \mathbf{V}_o = -\mathbf{V}_2 \qquad (2)$$

From (1) and (2),

$$2\mathbf{I}_1 = -5\mathbf{V}_2 \longrightarrow \mathbf{C} = \frac{\mathbf{I}_1}{\mathbf{V}_2} = \frac{-5}{2} = -2.5\text{ S}$$

But

$$\mathbf{I}_1 = \frac{\mathbf{V}_1 - \mathbf{V}_o}{1} = \mathbf{V}_1 + \mathbf{V}_2$$

$$-2.5\mathbf{V}_2 = \mathbf{V}_1 + \mathbf{V}_2 \longrightarrow \mathbf{V}_1 = -3.5\mathbf{V}_2$$

$$\mathbf{A} = \frac{\mathbf{V}_1}{\mathbf{V}_2} = -3.5$$

To get $\mathbf{B}$ and $\mathbf{D}$, consider the circuit in Fig. (b).

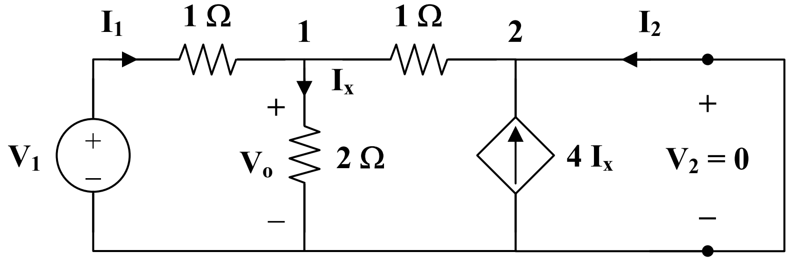

(b)

At node 1,

$$\mathbf{I}_1 = \frac{\mathbf{V}_o}{2} + \frac{\mathbf{V}_o}{1} \longrightarrow 2\mathbf{I}_1 = 3\mathbf{V}_o \qquad (3)$$

At node 2,

$$\mathbf{I}_2 + \frac{\mathbf{V}_o}{1} + 4\mathbf{I}_x = 0$$

$$-\mathbf{I}_2 = \mathbf{V}_o + 2\mathbf{V}_o = 0 \longrightarrow \mathbf{I}_2 = -3\mathbf{V}_o \qquad (4)$$

Adding (3) and (4),

$$2\mathbf{I}_1 + \mathbf{I}_2 = 0 \longrightarrow \mathbf{I}_1 = -0.5\mathbf{I}_2 \qquad (5)$$

$$\mathbf{D} = \frac{-\mathbf{I}_1}{\mathbf{I}_2} = 0.5$$

But $\quad \mathbf{I}_1 = \dfrac{\mathbf{V}_1 - \mathbf{V}_o}{1} \longrightarrow \mathbf{V}_1 = \mathbf{I}_1 + \mathbf{V}_o \qquad (6)$

Substituting (5) and (4) into (6),

$$\mathbf{V}_1 = \frac{-1}{2}\mathbf{I}_2 + \frac{-1}{3}\mathbf{I}_2 = \frac{-5}{6}\mathbf{I}_2$$

$$\mathbf{B} = \frac{-\mathbf{V}_1}{\mathbf{I}_2} = \frac{5}{6} = 0.8333\,\Omega$$

Thus,

$$[\mathbf{T}] = \underline{\begin{bmatrix} \mathbf{-3.5} & \mathbf{0.8333\,\Omega} \\ \mathbf{-2.5\,S} & \mathbf{-0.5} \end{bmatrix}}$$

Chapter 19, Solution 47.

To get A and C, consider the circuit below.

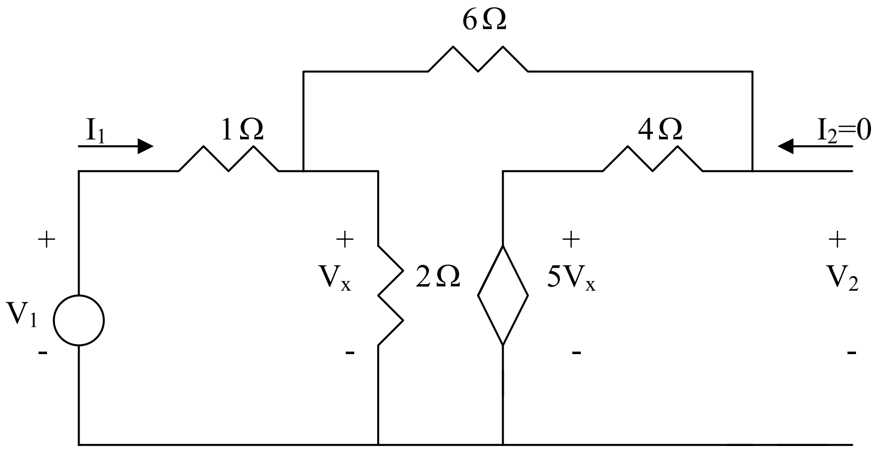

$$\frac{V_1 - V_x}{1} = \frac{V_x}{2} + \frac{V_x - 5V_x}{10} \longrightarrow V_1 = 1.1V_x$$

$$V_2 = 4(-0.4V_x) + 5V_x = 3.4V_x \longrightarrow A = \frac{V_1}{V_2} = 1.1/3.4 = 0.3235$$

$$I_1 = \frac{V_1 - V_x}{1} = 1.1V_x - V_x = 0.1V_x \longrightarrow C = \frac{I_1}{V_2} = 0.1/3.4 = 0.02941$$

Chapter 19, Solution 48.

(a) Refer to the circuit below.

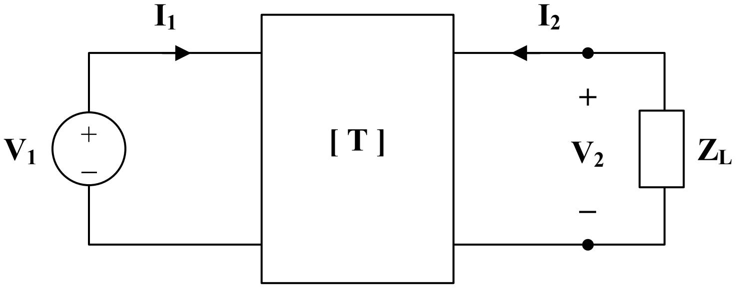

$$\mathbf{V}_1 = 4\mathbf{V}_2 - 30\mathbf{I}_2 \qquad (1)$$
$$\mathbf{I}_1 = 0.1\mathbf{V}_2 - \mathbf{I}_2 \qquad (2)$$

When the output terminals are shorted, $\mathbf{V}_2 = 0$.
So, (1) and (2) become

$\mathbf{V}_1 = \text{-}30\mathbf{I}_2$ and $\mathbf{I}_1 = \text{-}\mathbf{I}_2$

Hence,

$$\mathbf{Z}_{in} = \frac{\mathbf{V}_1}{\mathbf{I}_1} = \underline{\mathbf{30\,\Omega}}$$

(b) When the output terminals are open-circuited, $\mathbf{I}_2 = 0$.
So, (1) and (2) become

$\mathbf{V}_1 = 4\mathbf{V}_2$

$\mathbf{I}_1 = 0.1\mathbf{V}_2$ or $\mathbf{V}_2 = 10\mathbf{I}_1$

$\mathbf{V}_1 = 40\mathbf{I}_1$

$$\mathbf{Z}_{in} = \frac{\mathbf{V}_1}{\mathbf{I}_1} = \underline{\mathbf{40\,\Omega}}$$

(c) When the output port is terminated by a 10-Ω load, $V_2 = \text{-}10I_2$.
So, (1) and (2) become

$\mathbf{V}_1 = \text{-}40\mathbf{I}_2 - 30\mathbf{I}_2 = \text{-}70\mathbf{I}_2$

$\mathbf{I}_1 = \text{-}\mathbf{I}_2 - \mathbf{I}_2 = \text{-}2\mathbf{I}_2$

$\mathbf{V}_1 = 35\mathbf{I}_1$

$$\mathbf{Z}_{in} = \frac{\mathbf{V}_1}{\mathbf{I}_1} = \underline{\mathbf{35\,\Omega}}$$

Alternatively, we may use $\mathbf{Z}_{in} = \dfrac{\mathbf{A}\mathbf{Z}_L + \mathbf{B}}{\mathbf{C}\mathbf{Z}_L + \mathbf{D}}$

Chapter 19, Solution 49.

To get $\mathbf{A}$ and $\mathbf{C}$, refer to the circuit in Fig.(a).

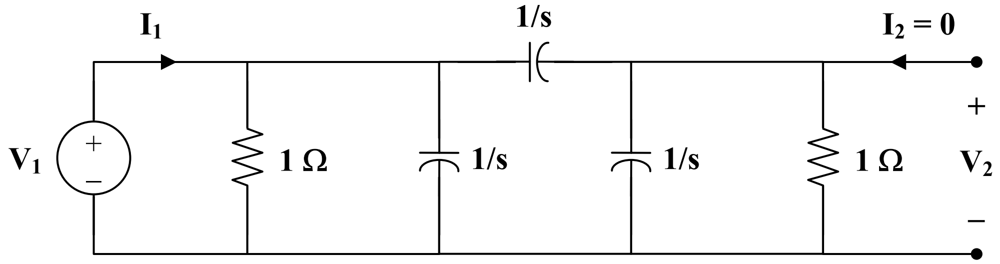

(a)

$$1 \,||\, \frac{1}{s} = \frac{1/s}{1 + 1/s} = \frac{1}{s+1}$$

$$\mathbf{V}_2 = \frac{1 \,||\, 1/s}{1/s + 1 \,||\, 1/s}\mathbf{V}_1$$

$$\mathbf{A} = \frac{\mathbf{V}_2}{\mathbf{V}_1} = \frac{\frac{1}{s+1}}{\frac{1}{s} + \frac{1}{s+1}} = \frac{s}{2s+1}$$

$$\mathbf{V}_1 = \mathbf{I}_1\left(\frac{1}{s+1}\right) || \left(\frac{1}{s} + \frac{1}{s+1}\right) = \mathbf{I}_1\left(\frac{1}{s+1}\right) || \left(\frac{2s+1}{s(s+1)}\right)$$

$$\frac{\mathbf{V}_1}{\mathbf{I}_1} = \frac{\left(\frac{1}{s+1}\right) \cdot \left(\frac{2s+1}{s(s+1)}\right)}{\frac{1}{s+1} + \frac{2s+1}{s(s+1)}} = \frac{2s+1}{(s+1)(3s+1)}$$

But $\quad \mathbf{V}_1 = \mathbf{V}_2 \cdot \dfrac{2s+1}{s}$

Hence, $\dfrac{\mathbf{V}_2}{\mathbf{I}_1} \cdot \dfrac{2s+1}{s} = \dfrac{2s+1}{(s+1)(3s+1)}$

$$\mathbf{C} = \frac{\mathbf{V}_2}{\mathbf{I}_1} = \frac{(s+1)(3s+1)}{s}$$

To get $\mathbf{B}$ and $\mathbf{D}$, consider the circuit in Fig. (b).

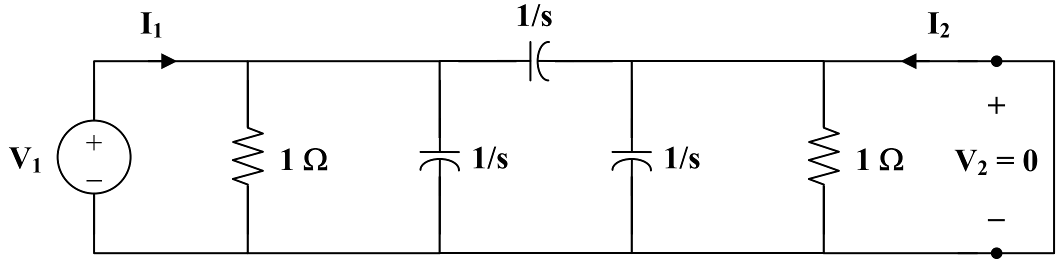

(b)

$$\mathbf{V}_1 = \mathbf{I}_1\left(1 \,||\, \frac{1}{s} \,||\, \frac{1}{s}\right) = \mathbf{I}_1\left(1 \,||\, \frac{1}{2s}\right) = \frac{\mathbf{I}_1}{2s+1}$$

$$\mathbf{I}_2 = \frac{\dfrac{-1}{s+1}\mathbf{I}_1}{\dfrac{1}{s+1} + \dfrac{1}{s}} = \frac{-s}{2s+1}\mathbf{I}_1$$

$$\mathbf{D} = \frac{-\mathbf{I}_1}{\mathbf{I}_2} = \frac{2s+1}{s} = 2 + \frac{1}{s}$$

$$\mathbf{V}_1 = \left(\frac{1}{2s+1}\right)\left(\frac{2s+1}{-s}\right)\mathbf{I}_2 = \frac{\mathbf{I}_2}{-s} \longrightarrow \mathbf{B} = \frac{-\mathbf{V}_1}{\mathbf{I}_2} = \frac{1}{s}$$

Thus,

$$[\mathbf{T}] = \begin{bmatrix} \dfrac{\mathbf{2}}{\mathbf{2s+1}} & \dfrac{\mathbf{1}}{\mathbf{s}} \\ \dfrac{\mathbf{(s+1)(3s+1)}}{\mathbf{s}} & \mathbf{2} + \dfrac{\mathbf{1}}{\mathbf{s}} \end{bmatrix}$$

Chapter 19, Solution 50.

To get a and c, consider the circuit below.

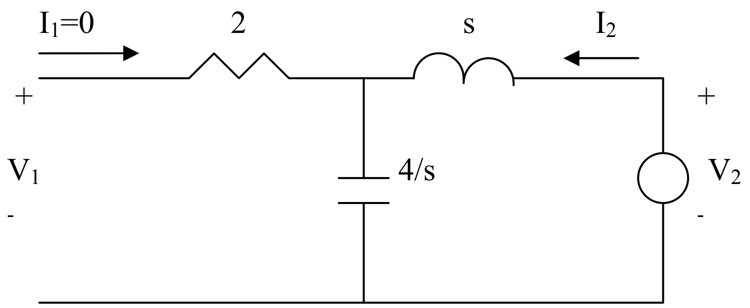

$$V_1 = \frac{4/s}{s+4/s}V_2 = \frac{4}{s^2+4}V_2 \quad \longrightarrow \quad a = V_2/V_1 = 1+0.25s^2$$

$V_2 = (s+4/s)I_2$ or

$$I_2 = \frac{V_2}{s+4/s} = \frac{(1+0.25s^2)V_1}{s+4/s} \quad \longrightarrow \quad c = \frac{I_2}{V_1} = \frac{s+0.25s^3}{s^2+4}$$

To get b and d, consider the circuit below.

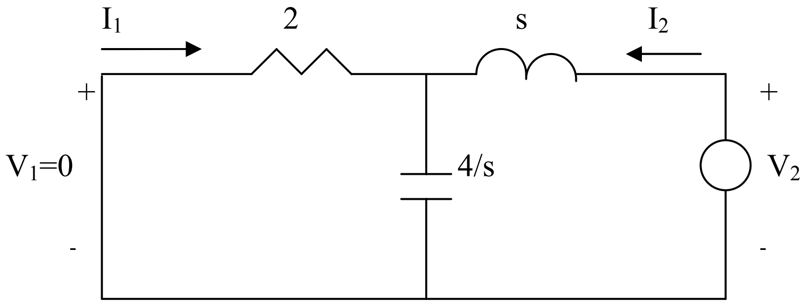

$$I_1 = \frac{-4/s}{2+4/s}I_2 = -\frac{2I_2}{s+2} \quad \longrightarrow \quad d = -\frac{I_2}{I_1} = 1+0.5s$$

$$V_2 = (s+2//\frac{4}{s})I_2 = \frac{(s^2+2s+4)}{s+2}I_2$$

$$= -\frac{(s^2+2s+4)}{s+2}\frac{(s+2)}{2}I_1 \quad \longrightarrow \quad b = -\frac{V_2}{I_1} = 0.5s^2+s+2$$

$$[t] = \begin{bmatrix} 0.25s^2+1 & 0.5s^2+s+2 \\ \dfrac{0.25s^2+s}{s^2+4} & 0.5s+1 \end{bmatrix}$$

Chapter 19, Solution 51.

To get **a** and **c**, consider the circuit in Fig. (a).

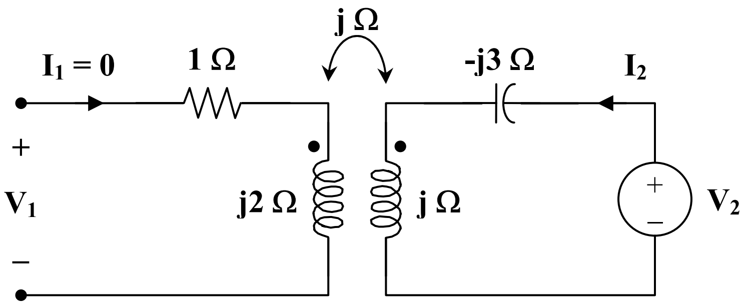

(a)

$$\mathbf{V}_2 = \mathbf{I}_2\,(j - j3) = -j2\,\mathbf{I}_2$$
$$\mathbf{V}_1 = -j\mathbf{I}_2$$

$$\mathbf{a} = \frac{\mathbf{V}_2}{\mathbf{V}_1} = \frac{-j2\,\mathbf{I}_2}{-j\,\mathbf{I}_2} = 2$$

$$\mathbf{c} = \frac{\mathbf{I}_2}{\mathbf{V}_1} = \frac{1}{-j} = j$$

To get **b** and **d**, consider the circuit in Fig. (b).

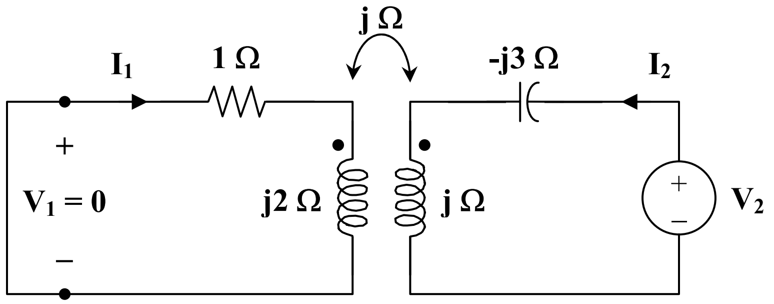

(b)

For mesh 1,

$$0 = (1 + j2)\,\mathbf{I}_1 - j\,\mathbf{I}_2$$

or
$$\frac{\mathbf{I}_2}{\mathbf{I}_1} = \frac{1 + j2}{j} = 2 - j$$

$$\mathbf{d} = \frac{-\mathbf{I}_2}{\mathbf{I}_1} = -2 + j$$

For mesh 2,

$$\mathbf{V}_2 = \mathbf{I}_2\,(j - j3) - j\mathbf{I}_1$$
$$\mathbf{V}_2 = \mathbf{I}_1\,(2 - j)(-j2) - j\mathbf{I}_1 = (-2 - j5)\,\mathbf{I}_1$$

$$\mathbf{b} = \frac{-\mathbf{V}_2}{\mathbf{I}_1} = 2 + j5$$

Thus,

$$[\mathbf{t}] = \underline{\begin{bmatrix} \mathbf{2} & \mathbf{2 + j5} \\ \mathbf{j} & \mathbf{-2 + j} \end{bmatrix}}$$

Chapter 19, Solution 52.

It is easy to find the z parameters and then transform these to h parameters and T parameters.

$$[\mathbf{z}] = \begin{bmatrix} R_1 + R_2 & R_2 \\ R_2 & R_2 + R_3 \end{bmatrix}$$

$$\Delta_z = (R_1 + R_2)(R_2 + R_3) - R_2^2$$
$$= R_1R_2 + R_2R_3 + R_3R_1$$

(a) $$[\mathbf{h}] = \begin{bmatrix} \dfrac{\Delta_z}{\mathbf{z}_{22}} & \dfrac{\mathbf{z}_{12}}{\mathbf{z}_{22}} \\ \dfrac{-\mathbf{z}_{21}}{\mathbf{z}_{22}} & \dfrac{1}{\mathbf{z}_{22}} \end{bmatrix} = \begin{bmatrix} \dfrac{R_1R_2 + R_2R_3 + R_3R_1}{R_2 + R_3} & \dfrac{R_2}{R_2 + R_3} \\ \dfrac{-R_2}{R_2 + R_3} & \dfrac{1}{R_2 + R_3} \end{bmatrix}$$

Thus,

$$\underline{\mathbf{h}_{11} = \mathbf{R}_1 + \frac{\mathbf{R}_2\mathbf{R}_3}{\mathbf{R}_2 + \mathbf{R}_3}}, \quad \underline{\mathbf{h}_{12} = \frac{\mathbf{R}_2}{\mathbf{R}_2 + \mathbf{R}_3} = -\mathbf{h}_{21}}, \quad \underline{\mathbf{h}_{22} = \frac{\mathbf{1}}{\mathbf{R}_2 + \mathbf{R}_3}}$$

as required.

(b) $$[\mathbf{T}] = \begin{bmatrix} \dfrac{\mathbf{z}_{11}}{\mathbf{z}_{21}} & \dfrac{\Delta_z}{\mathbf{z}_{21}} \\ \dfrac{1}{\mathbf{z}_{21}} & \dfrac{\mathbf{z}_{22}}{\mathbf{z}_{21}} \end{bmatrix} = \begin{bmatrix} \dfrac{R_1 + R_2}{R_2} & \dfrac{R_1R_2 + R_2R_3 + R_3R_1}{R_2} \\ \dfrac{1}{R_2} & \dfrac{R_2 + R_3}{R_2} \end{bmatrix}$$

Hence,

$$\underline{\mathbf{A} = 1 + \frac{\mathbf{R}_1}{\mathbf{R}_2}}, \quad \underline{\mathbf{B} = \mathbf{R}_3 + \frac{\mathbf{R}_1}{\mathbf{R}_2}(\mathbf{R}_2 + \mathbf{R}_3)}, \quad \underline{\mathbf{C} = \frac{1}{\mathbf{R}_2}}, \quad \underline{\mathbf{D} = 1 + \frac{\mathbf{R}_3}{\mathbf{R}_2}}$$

as required.

Chapter 19, Solution 53.

For the z parameters,

$$\mathbf{V}_1 = \mathbf{z}_{11}\mathbf{I}_1 + \mathbf{z}_{12}\mathbf{I}_2 \qquad (1)$$

$$\mathbf{V}_2 = \mathbf{z}_{12}\mathbf{I}_1 + \mathbf{z}_{22}\mathbf{I}_2 \qquad (2)$$

For **ABCD** parameters,

$$\mathbf{V}_1 = \mathbf{A}\mathbf{V}_2 - \mathbf{B}\mathbf{I}_2 \qquad (3)$$

$$\mathbf{I}_1 = \mathbf{C}\mathbf{V}_2 - \mathbf{D}\mathbf{I}_2 \qquad (4)$$

From (4),

$$\mathbf{V}_2 = \frac{\mathbf{I}_1}{\mathbf{C}} + \frac{\mathbf{D}}{\mathbf{C}}\mathbf{I}_2 \qquad (5)$$

Comparing (2) and (5),

$$\mathbf{z}_{21} = \frac{1}{\mathbf{C}}, \qquad \mathbf{z}_{22} = \frac{\mathbf{D}}{\mathbf{C}}$$

Substituting (5) into (3),

$$\mathbf{V}_1 = \frac{\mathbf{A}}{\mathbf{C}}\mathbf{I}_1 + \left(\frac{\mathbf{AD}}{\mathbf{C}} - \mathbf{B}\right)\mathbf{I}_2$$

$$= \frac{\mathbf{A}}{\mathbf{C}}\mathbf{I}_1 + \frac{\mathbf{AD} - \mathbf{BC}}{\mathbf{C}}\mathbf{I}_2 \qquad (6)$$

Comparing (6) and (1),

$$\mathbf{z}_{11} = \frac{\mathbf{A}}{\mathbf{C}} \qquad \mathbf{z}_{12} = \frac{\mathbf{AD} - \mathbf{BC}}{\mathbf{C}} = \frac{\Delta_T}{\mathbf{C}}$$

Thus,

$$\underline{[Z] = \begin{bmatrix} \frac{\mathbf{A}}{\mathbf{C}} & \frac{\Delta_T}{\mathbf{C}} \\ \frac{1}{\mathbf{C}} & \frac{\mathbf{D}}{\mathbf{C}} \end{bmatrix}}$$

Chapter 19, Solution 54.

For the y parameters

$$\mathbf{I}_1 = \mathbf{y}_{11}\mathbf{V}_1 + \mathbf{y}_{12}\mathbf{V}_2 \qquad (1)$$

$$\mathbf{I}_2 = \mathbf{y}_{21}\mathbf{V}_1 + \mathbf{y}_{22}\mathbf{V}_2 \qquad (2)$$

From (2),

$$\mathbf{V}_1 = \frac{\mathbf{I}_2}{\mathbf{y}_{21}} - \frac{\mathbf{y}_{22}}{\mathbf{y}_{21}}\mathbf{V}_2$$

or

$$\mathbf{V}_1 = \frac{-\mathbf{y}_{22}}{\mathbf{y}_{12}}\mathbf{V}_2 + \frac{1}{\mathbf{y}_{21}}\mathbf{I}_2 \qquad (3)$$

Substituting (3) into (1) gives

$$\mathbf{I}_1 = \frac{-\mathbf{y}_{11}\mathbf{y}_{22}}{\mathbf{y}_{21}}\mathbf{V}_2 + \mathbf{y}_{12}\mathbf{V}_2 + \frac{\mathbf{y}_{11}}{\mathbf{y}_{21}}\mathbf{I}_2$$

or

$$\mathbf{I}_1 = \frac{-\Delta_y}{\mathbf{y}_{21}}\mathbf{V}_2 + \frac{\mathbf{y}_{11}}{\mathbf{y}_{21}}\mathbf{I}_2 \qquad (4)$$

Comparing (3) and (4) with the following equations

$$\mathbf{V}_1 = \mathbf{A}\mathbf{V}_2 - \mathbf{B}\mathbf{I}_2$$

$$\mathbf{I}_1 = \mathbf{C}\mathbf{V}_2 - \mathbf{D}\mathbf{I}_2$$

clearly shows that

$$\underline{\mathbf{A} = \frac{-\mathbf{y}_{22}}{\mathbf{y}_{21}}}, \quad \underline{\mathbf{B} = \frac{-1}{\mathbf{y}_{21}}}, \quad \underline{\mathbf{C} = \frac{-\Delta_y}{\mathbf{y}_{21}}}, \quad \underline{\mathbf{D} = \frac{-\mathbf{y}_{11}}{\mathbf{y}_{21}}}$$

as required.

Chapter 19, Solution 55.

For the z parameters

$$\mathbf{V}_1 = \mathbf{z}_{11}\mathbf{I}_1 + \mathbf{z}_{12}\mathbf{I}_2 \qquad (1)$$

$$\mathbf{V}_2 = \mathbf{z}_{21}\mathbf{I}_1 + \mathbf{z}_{22}\mathbf{I}_2 \qquad (2)$$

From (1),

$$\mathbf{I}_1 = \frac{1}{\mathbf{z}_{11}}\mathbf{V}_1 - \frac{\mathbf{z}_{12}}{\mathbf{z}_{11}}\mathbf{I}_2 \qquad (3)$$

Substituting (3) into (2) gives

$$\mathbf{V}_2 = \frac{\mathbf{z}_{21}}{\mathbf{z}_{11}}\mathbf{V}_1 + \left(\mathbf{z}_{22} - \frac{\mathbf{z}_{21}\,\mathbf{z}_{12}}{\mathbf{z}_{11}}\right)\mathbf{I}_2$$

or $$\mathbf{V}_2 = \frac{\mathbf{z}_{21}}{\mathbf{z}_{11}}\mathbf{V}_1 + \frac{\Delta_z}{\mathbf{z}_{11}}\mathbf{I}_2 \qquad (4)$$

Comparing (3) and (4) with the following equations

$$\mathbf{I}_1 = \mathbf{g}_{11}\,\mathbf{V}_1 + \mathbf{g}_{12}\,\mathbf{I}_2$$
$$\mathbf{V}_2 = \mathbf{g}_{21}\,\mathbf{V}_1 + \mathbf{g}_{22}\,\mathbf{I}_2$$

indicates that

$$\underline{\mathbf{g}_{11} = \frac{1}{\mathbf{z}_{11}}}, \quad \underline{\mathbf{g}_{12} = \frac{-\mathbf{z}_{12}}{\mathbf{z}_{11}}}, \quad \underline{\mathbf{g}_{21} = \frac{\mathbf{z}_{21}}{\mathbf{z}_{11}}}, \quad \underline{\mathbf{g}_{22} = \frac{\Delta_z}{\mathbf{z}_{11}}}$$

as required.

Chapter 19, Solution 56.

(a) $\Delta_y = (2 + j)(3 - j) + j4 = 7 + j5$

$$[z] = \begin{bmatrix} y_{22}/\Delta_y & -y_{12}/\Delta_y \\ -y_{21}/\Delta_y & y_{11}/\Delta_y \end{bmatrix} = \underline{\begin{bmatrix} 0.2162 - j0.2973 & -0.2703 - j0.3784 \\ 0.0946 - j0.0676 & 0.2568 - j0.0405 \end{bmatrix}}\Omega$$

(b) $$[h] = \begin{bmatrix} 1/y_{11} & -y_{12}/y_{11} \\ y_{21}/y_{11} & \Delta_y/y_{11} \end{bmatrix} = \underline{\begin{bmatrix} 0.4 - j0.2 & -0.8 - j1.6 \\ -0.4 + j0.2 & 3.8 + j0.6 \end{bmatrix}}$$

(c) $$[t] = \begin{bmatrix} -y_{11}/y_{12} & -1/y_{12} \\ -\Delta_y/y_{12} & -y_{22}/y_{12} \end{bmatrix} = \underline{\begin{bmatrix} -0.25 + j0.5 & j0.25 \\ -1.25 + j1.75 & 0.25 + j0.75 \end{bmatrix}}$$

Chapter 19, Solution 57.

$\Delta_T = (3)(7) - (20)(1) = 1$

$$[\mathbf{z}] = \begin{bmatrix} \dfrac{\mathbf{A}}{\mathbf{C}} & \dfrac{\Delta_T}{\mathbf{C}} \\ \dfrac{1}{\mathbf{C}} & \dfrac{\mathbf{D}}{\mathbf{C}} \end{bmatrix} = \underline{\begin{bmatrix} \mathbf{3} & \mathbf{1} \\ \mathbf{1} & \mathbf{7} \end{bmatrix}\Omega}$$

$$[\mathbf{y}] = \begin{bmatrix} \frac{\mathbf{D}}{\mathbf{B}} & \frac{-\Delta_T}{\mathbf{B}} \\ \frac{-1}{\mathbf{B}} & \frac{\mathbf{A}}{\mathbf{B}} \end{bmatrix} = \underline{\begin{bmatrix} \frac{7}{20} & \frac{-1}{20} \\ \frac{-1}{20} & \frac{3}{20} \end{bmatrix} \mathbf{S}}$$

$$[\mathbf{h}] = \begin{bmatrix} \frac{\mathbf{B}}{\mathbf{D}} & \frac{\Delta_T}{\mathbf{D}} \\ \frac{-1}{\mathbf{D}} & \frac{\mathbf{C}}{\mathbf{D}} \end{bmatrix} = \underline{\begin{bmatrix} \frac{20}{7}\Omega & \frac{1}{7} \\ \frac{-1}{7} & \frac{1}{7}\mathbf{S} \end{bmatrix}}$$

$$[\mathbf{g}] = \begin{bmatrix} \frac{\mathbf{C}}{\mathbf{A}} & \frac{-\Delta_T}{\mathbf{A}} \\ \frac{1}{\mathbf{A}} & \frac{\mathbf{B}}{\mathbf{A}} \end{bmatrix} = \underline{\begin{bmatrix} \frac{1}{3}\mathbf{S} & \frac{-1}{3} \\ \frac{1}{3} & \frac{20}{3}\Omega \end{bmatrix}}$$

$$[\mathbf{t}] = \begin{bmatrix} \frac{\mathbf{D}}{\Delta_T} & \frac{\mathbf{B}}{\Delta_T} \\ \frac{\mathbf{C}}{\Delta_T} & \frac{\mathbf{A}}{\Delta_T} \end{bmatrix} = \underline{\begin{bmatrix} 7 & 20\,\Omega \\ 1\,\mathbf{S} & 3 \end{bmatrix}}$$

Chapter 19, Solution 58.

The given set of equations is for the h parameters.

$$[\mathbf{h}] = \begin{bmatrix} 1\,\Omega & 2 \\ -2 & 0.4\,\mathrm{S} \end{bmatrix} \qquad \Delta_h = (1)(0.4) - (2)(-2) = 4.4$$

(a)

$$[\mathbf{y}] = \begin{bmatrix} \frac{1}{\mathbf{h}_{11}} & \frac{-\mathbf{h}_{12}}{\mathbf{h}_{11}} \\ \frac{\mathbf{h}_{21}}{\mathbf{h}_{11}} & \frac{\Delta_h}{\mathbf{h}_{11}} \end{bmatrix} = \underline{\begin{bmatrix} 1 & -2 \\ -2 & 4.4 \end{bmatrix} \mathbf{S}}$$

(b)

$$[\mathbf{T}] = \begin{bmatrix} \frac{-\Delta_h}{\mathbf{h}_{21}} & \frac{-\mathbf{h}_{11}}{\mathbf{h}_{21}} \\ \frac{-\mathbf{h}_{22}}{\mathbf{h}_{21}} & \frac{-1}{\mathbf{h}_{21}} \end{bmatrix} = \underline{\begin{bmatrix} 2.2 & 0.5\,\Omega \\ 0.2\,\mathbf{S} & 0.5 \end{bmatrix}}$$

Chapter 19, Solution 59.

$$\Delta_g = (0.06)(2) - (-0.4)(2) = 0.12 + 0.08 = 0.2$$

(a) $$[\mathbf{z}] = \begin{bmatrix} \frac{1}{\mathbf{g}_{11}} & \frac{-\mathbf{g}_{12}}{\mathbf{g}_{11}} \\ \frac{\mathbf{g}_{21}}{\mathbf{g}_{11}} & \frac{\Delta_g}{\mathbf{g}_{11}} \end{bmatrix} = \underline{\begin{bmatrix} \mathbf{16.667} & \mathbf{6.667} \\ \mathbf{3.333} & \mathbf{3.333} \end{bmatrix}\Omega}$$

(b) $$[\mathbf{y}] = \begin{bmatrix} \frac{\Delta_g}{\mathbf{g}_{22}} & \frac{\mathbf{g}_{12}}{\mathbf{g}_{22}} \\ \frac{-\mathbf{g}_{21}}{\mathbf{g}_{22}} & \frac{1}{\mathbf{g}_{22}} \end{bmatrix} = \underline{\begin{bmatrix} \mathbf{0.1} & \mathbf{-0.2} \\ \mathbf{-0.1} & \mathbf{0.5} \end{bmatrix}\mathbf{S}}$$

(c) $$[\mathbf{h}] = \begin{bmatrix} \frac{\mathbf{g}_{22}}{\Delta_g} & \frac{-\mathbf{g}_{12}}{\Delta_g} \\ \frac{-\mathbf{g}_{21}}{\Delta_g} & \frac{\mathbf{g}_{11}}{\Delta_g} \end{bmatrix} = \underline{\begin{bmatrix} \mathbf{10\,\Omega} & \mathbf{2} \\ \mathbf{-1} & \mathbf{0.3\,S} \end{bmatrix}}$$

(d) $$[\mathbf{T}] = \begin{bmatrix} \frac{1}{\mathbf{g}_{21}} & \frac{\mathbf{g}_{22}}{\mathbf{g}_{21}} \\ \frac{\mathbf{g}_{11}}{\mathbf{g}_{21}} & \frac{\Delta_g}{\mathbf{g}_{21}} \end{bmatrix} = \underline{\begin{bmatrix} \mathbf{5} & \mathbf{10\,\Omega} \\ \mathbf{0.3\,S} & \mathbf{1} \end{bmatrix}}$$

Chapter 19, Solution 60.

$$\Delta_y = \mathbf{y}_{11}\mathbf{y}_{22} - \mathbf{y}_{12}\mathbf{y}_{21} = 0.3 - 0.02 = 0.28$$

(a) $$[\mathbf{z}] = \begin{bmatrix} \frac{\mathbf{y}_{22}}{\Delta_y} & \frac{-\mathbf{y}_{12}}{\Delta_y} \\ \frac{-\mathbf{y}_{21}}{\Delta_y} & \frac{\mathbf{y}_{11}}{\Delta_y} \end{bmatrix} = \underline{\begin{bmatrix} \mathbf{1.786} & \mathbf{0.7143} \\ \mathbf{0.3571} & \mathbf{2.143} \end{bmatrix}\Omega}$$

(b) $$[\mathbf{h}] = \begin{bmatrix} \frac{1}{\mathbf{y}_{11}} & \frac{-\mathbf{y}_{12}}{\mathbf{y}_{11}} \\ \frac{\mathbf{y}_{21}}{\mathbf{y}_{11}} & \frac{\Delta_y}{\mathbf{y}_{11}} \end{bmatrix} = \underline{\begin{bmatrix} \mathbf{1.667\,\Omega} & \mathbf{0.3333} \\ \mathbf{-0.1667} & \mathbf{0.4667\,S} \end{bmatrix}}$$

(c) $$[\mathbf{t}] = \begin{bmatrix} \frac{-\mathbf{y}_{11}}{\mathbf{y}_{12}} & \frac{-1}{\mathbf{y}_{12}} \\ \frac{-\Delta_y}{\mathbf{y}_{12}} & \frac{-\mathbf{y}_{22}}{\mathbf{y}_{12}} \end{bmatrix} = \underline{\begin{bmatrix} \mathbf{3} & \mathbf{5\,\Omega} \\ \mathbf{1.4\,S} & \mathbf{2.5} \end{bmatrix}}$$

Chapter 19, Solution 61.

(a) To obtain $\mathbf{z}_{11}$ and $\mathbf{z}_{21}$, consider the circuit in Fig. (a).

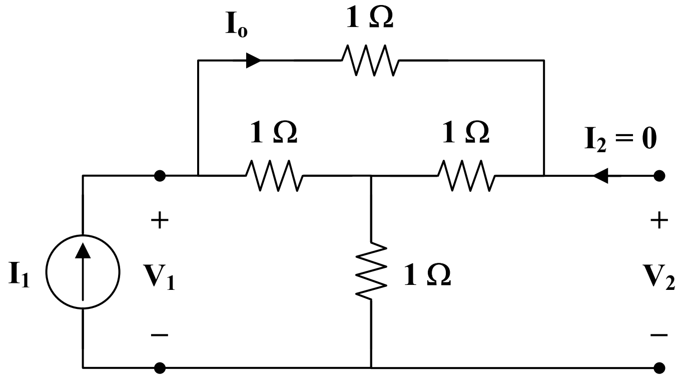

(a)

$$\mathbf{V}_1 = \mathbf{I}_1[1 + 1 \,||\, (1+1)] = \mathbf{I}_1\left(1 + \frac{2}{3}\right) = \frac{5}{3}\mathbf{I}_1$$

$$\mathbf{z}_{11} = \frac{\mathbf{V}_1}{\mathbf{I}_1} = \frac{5}{3}$$

$$\mathbf{I}_o = \frac{1}{1+2}\mathbf{I}_1 = \frac{1}{3}\mathbf{I}_1$$

$$-\mathbf{V}_2 + \mathbf{I}_o + \mathbf{I}_1 = 0$$

$$\mathbf{V}_2 = \frac{1}{3}\mathbf{I}_1 + \mathbf{I}_1 = \frac{4}{3}\mathbf{I}_1$$

$$\mathbf{z}_{21} = \frac{\mathbf{V}_2}{\mathbf{I}_1} = \frac{4}{3}$$

To obtain $\mathbf{z}_{22}$ and $\mathbf{z}_{12}$, consider the circuit in Fig. (b).

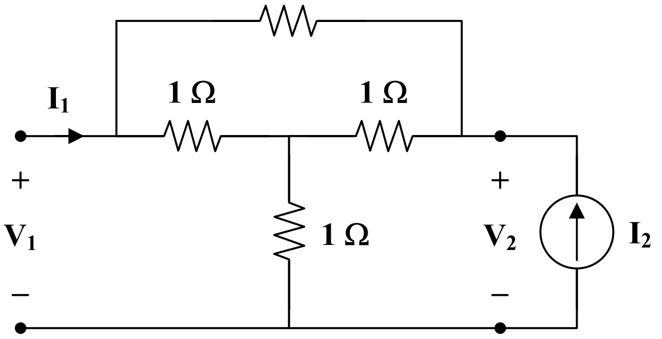

(b)

Due to symmetry, this is similar to the circuit in Fig. (a).

$$\mathbf{z}_{22} = \mathbf{z}_{11} = \frac{5}{3}, \qquad \mathbf{z}_{21} = \mathbf{z}_{12} = \frac{4}{3}$$

$$[\mathbf{z}] = \begin{bmatrix} \frac{5}{3} & \frac{4}{3} \\ \frac{4}{3} & \frac{5}{3} \end{bmatrix} \Omega$$

(b) $$[\mathbf{h}] = \begin{bmatrix} \frac{\Delta_z}{\mathbf{z}_{22}} & \frac{\mathbf{z}_{12}}{\mathbf{z}_{22}} \\ \frac{-\mathbf{z}_{21}}{\mathbf{z}_{22}} & \frac{1}{\mathbf{z}_{22}} \end{bmatrix} = \begin{bmatrix} \frac{3}{5}\Omega & \frac{4}{5} \\ \frac{-4}{5} & \frac{3}{5}\text{S} \end{bmatrix}$$

(c) $$[\mathbf{T}] = \begin{bmatrix} \frac{\mathbf{z}_{11}}{\mathbf{z}_{21}} & \frac{\Delta_z}{\mathbf{z}_{21}} \\ \frac{1}{\mathbf{z}_{21}} & \frac{\mathbf{z}_{22}}{\mathbf{z}_{21}} \end{bmatrix} = \begin{bmatrix} \frac{5}{4} & \frac{3}{4}\Omega \\ \frac{3}{4}\text{S} & \frac{5}{4} \end{bmatrix}$$

Chapter 19, Solution 62.

Consider the circuit shown below.

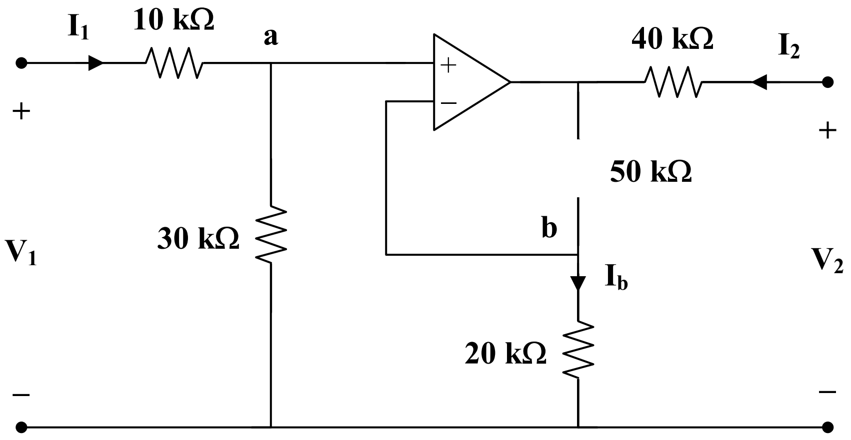

Since no current enters the input terminals of the op amp,

$$\mathbf{V}_1 = (10+30)\times 10^3\,\mathbf{I}_1 \qquad (1)$$

But $$\mathbf{V}_a = \mathbf{V}_b = \frac{30}{40}\mathbf{V}_1 = \frac{3}{4}\mathbf{V}_1$$

$$\mathbf{I}_b = \frac{\mathbf{V}_b}{20\times 10^3} = \frac{3}{80\times 10^3}\mathbf{V}_1$$

which is the same current that flows through the 50-kΩ resistor.

Thus, $$\mathbf{V}_2 = 40\times 10^3\,\mathbf{I}_2 + (50+20)\times 10^3\,\mathbf{I}_b$$

$$\mathbf{V}_2 = 40\times 10^3\,\mathbf{I}_2 + 70\times 10^3 \cdot \frac{3}{80\times 10^3}\mathbf{V}_1$$

$$\mathbf{V}_2 = \frac{21}{8}\mathbf{V}_1 + 40\times 10^3\,\mathbf{I}_2$$

$$\mathbf{V}_2 = 105\times 10^3\,\mathbf{I}_1 + 40\times 10^3\,\mathbf{I}_2 \qquad (2)$$

From (1) and (2),

$$[\mathbf{z}] = \begin{bmatrix} \mathbf{40} & \mathbf{0} \\ \mathbf{105} & \mathbf{40} \end{bmatrix} \mathbf{k\Omega}$$

$$\Delta_z = \mathbf{z}_{11}\mathbf{z}_{22} - \mathbf{z}_{12}\mathbf{z}_{21} = 16\times 10^8$$

$$[\mathbf{T}] = \begin{bmatrix} \mathbf{A} & \mathbf{B} \\ \mathbf{C} & \mathbf{D} \end{bmatrix} = \begin{bmatrix} \dfrac{\mathbf{z}_{11}}{\mathbf{z}_{21}} & \dfrac{\Delta_z}{\mathbf{z}_{21}} \\ \dfrac{1}{\mathbf{z}_{21}} & \dfrac{\mathbf{z}_{22}}{\mathbf{z}_{21}} \end{bmatrix} = \underline{\begin{bmatrix} \mathbf{0.381} & \mathbf{15.24\ k\Omega} \\ \mathbf{9.52\ \mu S} & \mathbf{0.381} \end{bmatrix}}$$

Chapter 19, Solution 63.

To get z_{11} and z_{21}, consider the circuit below.

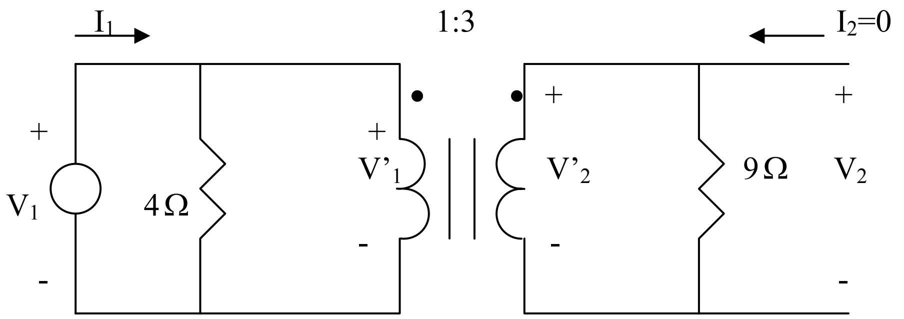

$$Z_R = \frac{9}{n^2} = 1, \qquad n = 3$$

$$V_1 = (4 // Z_R)I_1 = \frac{4}{5}I_1 \quad \longrightarrow \quad z_{11} = \frac{V_1}{I_1} = 0.8$$

$$V_2 = V_2' = nV_1' = nV_1 = 3(4/5)I_1 \quad \longrightarrow \quad z_{21} = \frac{V_2}{I_1} = 2.4$$

To get z_{21} and z_{22}, consider the circuit below.

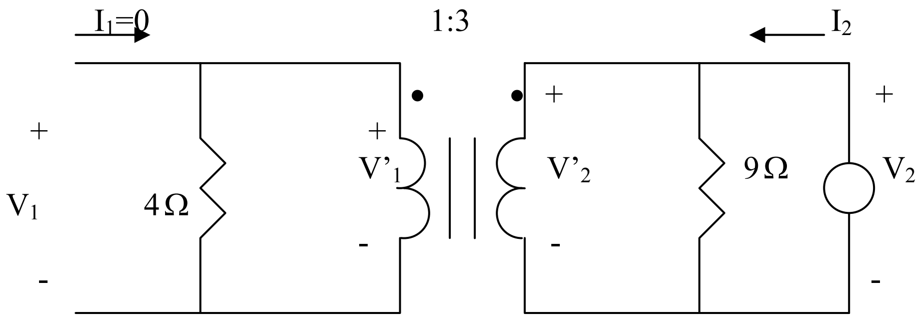

$$Z_R' = n^2(4) = 36, \qquad n = 3$$

$$V_2 = (9 // Z_R')I_2 = \frac{9x36}{45} I_2 \longrightarrow z_{22} = \frac{V_2}{I_2} = 7.2$$

$$V_1 = \frac{V_2}{n} = \frac{V_2}{3} = 2.4I_2 \longrightarrow z_{21} = \frac{V_1}{I_2} = 2.4$$

Thus,

$$\underline{[z] = \begin{bmatrix} 0.8 & 2.4 \\ 2.4 & 7.2 \end{bmatrix} \Omega}$$

Chapter 19, Solution 64.

$$1\ \mu F \longrightarrow \frac{1}{j\omega C} = \frac{-j}{(10^3)(10^{-6})} = -j\ k\Omega$$

Consider the op amp circuit below.

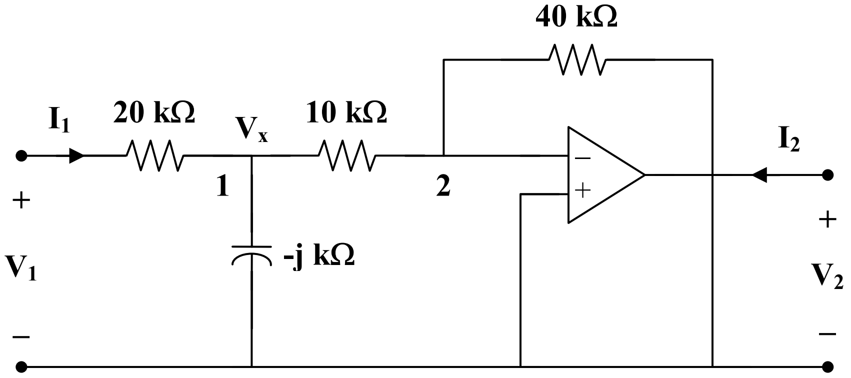

At node 1,

$$\frac{\mathbf{V}_1 - \mathbf{V}_x}{20} = \frac{\mathbf{V}_x}{-j} + \frac{\mathbf{V}_x - 0}{10}$$

$$\mathbf{V}_1 = (3 + j20)\mathbf{V}_x \qquad (1)$$

At node 2,

$$\frac{\mathbf{V}_x - 0}{10} = \frac{0 - \mathbf{V}_2}{40} \longrightarrow \mathbf{V}_x = \frac{-1}{4}\mathbf{V}_2 \qquad (2)$$

But $\qquad \mathbf{I}_1 = \dfrac{\mathbf{V}_1 - \mathbf{V}_x}{20 \times 10^3} \qquad (3)$

Substituting (2) into (3) gives

$$\mathbf{I}_1 = \frac{\mathbf{V}_1 + 0.25\,\mathbf{V}_2}{20\times 10^3} = 50\times 10^{-6}\,\mathbf{V}_1 + 12.5\times 10^{-6}\,\mathbf{V}_2 \qquad (4)$$

Substituting (2) into (1) yields

$$\mathbf{V}_1 = \frac{-1}{4}(3 + j20)\,\mathbf{V}_2$$

or

$$0 = \mathbf{V}_1 + (0.75 + j5)\,\mathbf{V}_2 \qquad (5)$$

Comparing (4) and (5) with the following equations

$$\mathbf{I}_1 = \mathbf{y}_{11}\,\mathbf{V}_1 + \mathbf{y}_{12}\,\mathbf{V}_2$$
$$\mathbf{I}_2 = \mathbf{y}_{21}\,\mathbf{V}_1 + \mathbf{y}_{22}\,\mathbf{V}_2$$

indicates that $\mathbf{I}_2 = 0$ and that

$$[\mathbf{y}] = \begin{bmatrix} \mathbf{50\times 10^{-6}} & \mathbf{12.5\times 10^{-6}} \\ \mathbf{1} & \mathbf{0.75 + j5} \end{bmatrix} \mathbf{S}$$

$$\Delta_y = (77.5 + j25. - 12.5)\times 10^{-6} = (65 + j250)\times 10^{-6}$$

$$[\mathbf{h}] = \begin{bmatrix} \dfrac{1}{\mathbf{y}_{11}} & \dfrac{-\mathbf{y}_{12}}{\mathbf{y}_{11}} \\ \dfrac{\mathbf{y}_{21}}{\mathbf{y}_{11}} & \dfrac{\Delta_y}{\mathbf{y}_{11}} \end{bmatrix} = \begin{bmatrix} \mathbf{2\times 10^4\ \Omega} & \mathbf{-0.25} \\ \mathbf{2\times 10^4} & \mathbf{1.3 + j5\ S} \end{bmatrix}$$

Chapter 19, Solution 65.

The network consists of two two-ports in series. It is better to work with z parameters and then convert to y parameters.

For N_a, $[\mathbf{z}_a] = \begin{bmatrix} 4 & 2 \\ 2 & 2 \end{bmatrix}$

For N_b, $[\mathbf{z}_b] = \begin{bmatrix} 2 & 1 \\ 1 & 1 \end{bmatrix}$

$$[\mathbf{z}] = [\mathbf{z}_a] + [\mathbf{z}_b] = \begin{bmatrix} 6 & 3 \\ 3 & 3 \end{bmatrix}$$

$\Delta_z = 18 - 9 = 9$

$$[\mathbf{y}] = \begin{bmatrix} \frac{\mathbf{z}_{22}}{\Delta_z} & \frac{-\mathbf{z}_{12}}{\Delta_z} \\ \frac{-\mathbf{z}_{21}}{\Delta_z} & \frac{\mathbf{z}_{11}}{\Delta_z} \end{bmatrix} = \underline{\begin{bmatrix} \frac{\mathbf{1}}{\mathbf{3}} & \frac{\mathbf{-1}}{\mathbf{3}} \\ \frac{\mathbf{-1}}{\mathbf{3}} & \frac{\mathbf{2}}{\mathbf{3}} \end{bmatrix} \mathbf{S}}$$

Chapter 19, Solution 66.

Since we have two two-ports in series, it is better to convert the given y parameters to z parameters.

$$\Delta_y = \mathbf{y}_{11}\mathbf{y}_{22} - \mathbf{y}_{12}\mathbf{y}_{21} = (2\times10^{-3})(10\times10^{-3}) - 0 = 20\times10^{-6}$$

$$[\mathbf{z}_a] = \begin{bmatrix} \frac{\mathbf{y}_{22}}{\Delta_y} & \frac{-\mathbf{y}_{12}}{\Delta_y} \\ \frac{-\mathbf{y}_{21}}{\Delta_y} & \frac{\mathbf{y}_{11}}{\Delta_y} \end{bmatrix} = \begin{bmatrix} 500\,\Omega & 0 \\ 0 & 100\,\Omega \end{bmatrix}$$

$$[\mathbf{z}] = \begin{bmatrix} 500 & 0 \\ 0 & 100 \end{bmatrix} + \begin{bmatrix} 100 & 100 \\ 100 & 100 \end{bmatrix} = \begin{bmatrix} 600 & 100 \\ 100 & 200 \end{bmatrix}$$

i.e.
$$\mathbf{V}_1 = \mathbf{z}_{11}\mathbf{I}_1 + \mathbf{z}_{12}\mathbf{I}_2$$
$$\mathbf{V}_2 = \mathbf{z}_{21}\mathbf{I}_1 + \mathbf{z}_{22}\mathbf{I}_2$$

or
$$\mathbf{V}_1 = 600\mathbf{I}_1 + 100\mathbf{I}_2 \qquad (1)$$
$$\mathbf{V}_2 = 100\mathbf{I}_1 + 200\mathbf{I}_2 \qquad (2)$$

But, at the input port,
$$\mathbf{V}_s = \mathbf{V}_1 + 60\mathbf{I}_1 \qquad (3)$$

and at the output port,
$$\mathbf{V}_2 = \mathbf{V}_o = -300\mathbf{I}_2 \qquad (4)$$

From (2) and (4),
$$100\mathbf{I}_1 + 200\mathbf{I}_2 = -300\mathbf{I}_2$$
$$\mathbf{I}_1 = -5\mathbf{I}_2 \qquad (5)$$

Substituting (1) and (5) into (3),
$$\mathbf{V}_s = 600\mathbf{I}_1 + 100\mathbf{I}_2 + 60\mathbf{I}_1$$

$$= (660)(\text{-}5)\mathbf{I}_2 + 100\mathbf{I}_2$$
$$= \text{-}3200\mathbf{I}_2 \qquad (6)$$

From (4) and (6),

$$\frac{\mathbf{V}_o}{\mathbf{V}_2} = \frac{\text{-}300\mathbf{I}_2}{\text{-}3200\mathbf{I}_2} = \underline{\mathbf{0.09375}}$$

Chapter 19, Solution 67.

The y parameters for the upper network is

$$[\mathbf{y}] = \begin{bmatrix} 2 & \text{-}1 \\ \text{-}1 & 2 \end{bmatrix}, \qquad \Delta_y = 4 - 1 = 3$$

$$[\mathbf{z}_a] = \begin{bmatrix} \dfrac{\mathbf{y}_{22}}{\Delta_y} & \dfrac{\text{-}\mathbf{y}_{12}}{\Delta_y} \\ \dfrac{\text{-}\mathbf{y}_{21}}{\Delta_y} & \dfrac{\mathbf{y}_{11}}{\Delta_y} \end{bmatrix} = \begin{bmatrix} \dfrac{2}{3} & \dfrac{1}{3} \\ \dfrac{1}{3} & \dfrac{2}{3} \end{bmatrix}$$

$$[\mathbf{z}_b] = \begin{bmatrix} 1 & 1 \\ 1 & 1 \end{bmatrix}$$

$$[\mathbf{z}] = [\mathbf{z}_a] + [\mathbf{z}_b] = \begin{bmatrix} 5/3 & 4/3 \\ 4/3 & 5/3 \end{bmatrix}$$

$$\Delta_z = \frac{25}{9} - \frac{16}{9} = 1$$

$$[\mathbf{T}] = \begin{bmatrix} \dfrac{\mathbf{z}_{11}}{\mathbf{z}_{21}} & \dfrac{\Delta_z}{\mathbf{z}_{21}} \\ \dfrac{1}{\mathbf{z}_{21}} & \dfrac{\mathbf{z}_{22}}{\mathbf{z}_{21}} \end{bmatrix} = \underline{\begin{bmatrix} \mathbf{1.25} & \mathbf{0.75\,\Omega} \\ \mathbf{0.75\ S} & \mathbf{1.25} \end{bmatrix}}$$

Chapter 19, Solution 68.

For the upper network N_a, $[\mathbf{y}_a] = \begin{bmatrix} 4 & \text{-}2 \\ \text{-}2 & 4 \end{bmatrix}$

and for the lower network N_b, $[\mathbf{y}_b] = \begin{bmatrix} 2 & -1 \\ 1 & 2 \end{bmatrix}$

For the overall network,

$$[\mathbf{y}] = [\mathbf{y}_a] + [\mathbf{y}_b] = \begin{bmatrix} 6 & -3 \\ -3 & 6 \end{bmatrix}$$

$$\Delta_y = 36 - 9 = 27$$

$$[\mathbf{h}] = \begin{bmatrix} \dfrac{1}{\mathbf{y}_{11}} & \dfrac{-\mathbf{y}_{12}}{\mathbf{y}_{11}} \\ \dfrac{\mathbf{y}_{21}}{\mathbf{y}_{11}} & \dfrac{\Delta_y}{\mathbf{y}_{11}} \end{bmatrix} = \underline{\begin{bmatrix} \frac{1}{6}\Omega & \frac{-1}{2} \\ \frac{-1}{2} & \frac{9}{2}\text{S} \end{bmatrix}}$$

Chapter 19, Solution 69.

We first determine the y parameters for the upper network N_a.
To get $\mathbf{y}_{11}$ and $\mathbf{y}_{21}$, consider the circuit in Fig. (a).

$$n = \frac{1}{2}, \qquad \mathbf{Z}_R = \frac{1/s}{n^2} = \frac{4}{s}$$

$$\mathbf{V}_1 = (2 + \mathbf{Z}_R)\mathbf{I}_1 = \left(2 + \frac{4}{s}\right)\mathbf{I}_1 = \left(\frac{2s+4}{s}\right)\mathbf{I}_1$$

$$\mathbf{y}_{11} = \frac{\mathbf{I}_1}{\mathbf{V}_1} = \frac{s}{2(s+2)}$$

$$\mathbf{I}_2 = \frac{-\mathbf{I}_1}{n} = -2\mathbf{I}_1 = \frac{-s\mathbf{V}_1}{s+2}$$

$$\mathbf{y}_{21} = \frac{\mathbf{I}_2}{\mathbf{V}_1} = \frac{-s}{s+2}$$

To get $\mathbf{y}_{22}$ and $\mathbf{y}_{12}$, consider the circuit in Fig. (b).

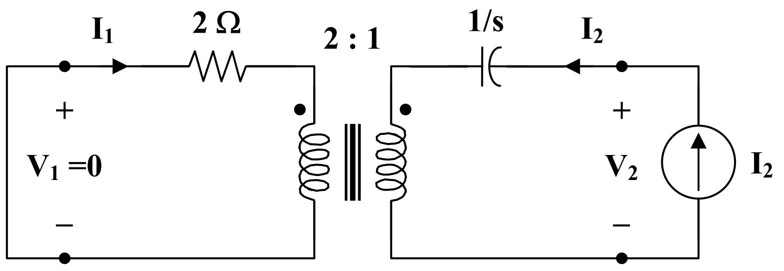

(b)

$$\mathbf{Z}_R{}' = (n^2)(2) = \left(\frac{1}{4}\right)(2) = \frac{1}{2}$$

$$\mathbf{V}_2 = \left(\frac{1}{s} + \mathbf{Z}_R{}'\right)\mathbf{I}_2 = \left(\frac{1}{s} + \frac{1}{2}\right)\mathbf{I}_2 = \left(\frac{s+2}{2s}\right)\mathbf{I}_2$$

$$\mathbf{y}_{22} = \frac{\mathbf{I}_2}{\mathbf{V}_2} = \frac{2s}{s+2}$$

$$\mathbf{I}_1 = -n\,\mathbf{I}_2 = \left(\frac{-1}{2}\right)\left(\frac{2s}{s+2}\right)\mathbf{V}_2 = \left(\frac{-s}{s+2}\right)\mathbf{V}_2$$

$$\mathbf{y}_{12} = \frac{\mathbf{I}_1}{\mathbf{V}_2} = \frac{-s}{s+2}$$

$$[\mathbf{y}_a] = \begin{bmatrix} \dfrac{s}{2(s+2)} & \dfrac{-s}{s+2} \\ \dfrac{-s}{s+2} & \dfrac{2s}{s+2} \end{bmatrix}$$

For the lower network N_b, we obtain $\mathbf{y}_{11}$ and $\mathbf{y}_{21}$ by referring to the network in Fig. (c).

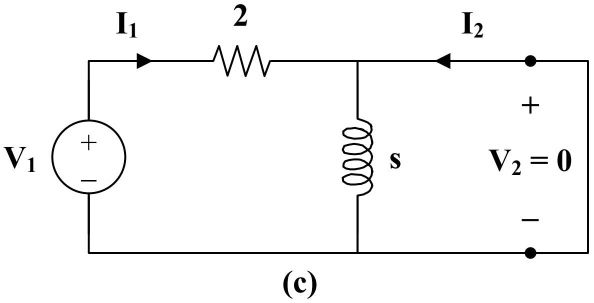

(c)

$$\mathbf{V}_1 = 2\mathbf{I}_1 \longrightarrow \mathbf{y}_{11} = \frac{\mathbf{I}_1}{\mathbf{V}_1} = \frac{1}{2}$$

$$\mathbf{I}_2 = -\mathbf{I}_1 = \frac{-\mathbf{V}_1}{2} \longrightarrow \mathbf{y}_{21} = \frac{\mathbf{I}_2}{\mathbf{V}_1} = \frac{-1}{2}$$

To get $\mathbf{y}_{22}$ and $\mathbf{y}_{12}$, refer to the circuit in Fig. (d).

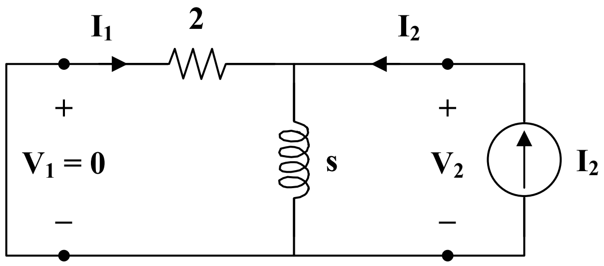

(d)

$$\mathbf{V}_2 = (s \parallel 2)\mathbf{I}_2 = \frac{2s}{s+2}\mathbf{I}_2 \longrightarrow \mathbf{y}_{22} = \frac{\mathbf{I}_2}{\mathbf{V}_2} = \frac{s+2}{2s}$$

$$\mathbf{I}_1 = -\mathbf{I}_2 \cdot \frac{-s}{s+2} = \left(\frac{-s}{s+2}\right)\left(\frac{s+2}{2s}\right)\mathbf{V}_2 = \frac{-\mathbf{V}_2}{2}$$

$$\mathbf{y}_{12} = \frac{\mathbf{I}_1}{\mathbf{V}_2} = \frac{-1}{2}$$

$$[\mathbf{y}_b] = \begin{bmatrix} 1/2 & -1/2 \\ -1/2 & (s+2)/2s \end{bmatrix}$$

$$[\mathbf{y}] = [\mathbf{y}_a] + [\mathbf{y}_b] = \underline{\begin{bmatrix} \mathbf{\dfrac{s+1}{s+2}} & \mathbf{\dfrac{-(3s+2)}{2(s+2)}} \\ \mathbf{\dfrac{-(3s+2)}{2(s+2)}} & \mathbf{\dfrac{5s^2+4s+4}{2s(s+2)}} \end{bmatrix}}$$

Chapter 19, Solution 70.

We may obtain the g parameters from the given z parameters.

$$[\mathbf{z}_a] = \begin{bmatrix} 25 & 20 \\ 5 & 10 \end{bmatrix}, \qquad \Delta_{z_a} = 250 - 100 = 150$$

$$[\mathbf{z}_b] = \begin{bmatrix} 50 & 25 \\ 25 & 30 \end{bmatrix}, \qquad \Delta_{z_b} = 1500 - 625 = 875$$

$$[\mathbf{g}] = \begin{bmatrix} \frac{1}{z_{11}} & \frac{-z_{12}}{z_{11}} \\ \frac{z_{21}}{z_{11}} & \frac{\Delta_z}{z_{11}} \end{bmatrix}$$

$$[\mathbf{g}_a] = \begin{bmatrix} 0.04 & -0.8 \\ 0.2 & 6 \end{bmatrix}, \qquad [\mathbf{g}_b] = \begin{bmatrix} 0.02 & -0.5 \\ 0.5 & 17.5 \end{bmatrix}$$

$$[\mathbf{g}] = [\mathbf{g}_a] + [\mathbf{g}_b] = \underline{\begin{bmatrix} \mathbf{0.06\ S} & \mathbf{-1.3} \\ \mathbf{0.7} & \mathbf{23.5\ \Omega} \end{bmatrix}}$$

Chapter 19, Solution 71.

This is a parallel-series connection of two two-ports. We need to add their g parameters together and obtain z parameters from there.

For the transformer,

$$V_1 = \frac{1}{2} V_2, \quad I_1 = -2I_2$$

Comparing this with

$$V_1 = AV_2 - BI_2, \qquad I_1 = CV_2 - DI_2$$

shows that

$$[T_{b1}] = \begin{bmatrix} 0.5 & 0 \\ 0 & 2 \end{bmatrix}$$

To get A and C for T_{b2} , consider the circuit below.

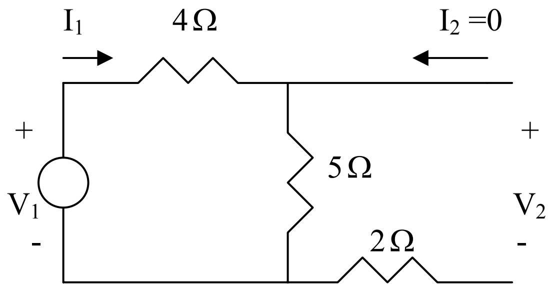

$V_1 = 9I_1, \quad V_2 = 5I_1$

$$A = \frac{V_1}{V_2} = 9/5 = 1.8, \quad C = \frac{I_1}{V_2} = 1/5 = 0.2$$

Chapter 19, Solution 72.

Consider the network shown below.

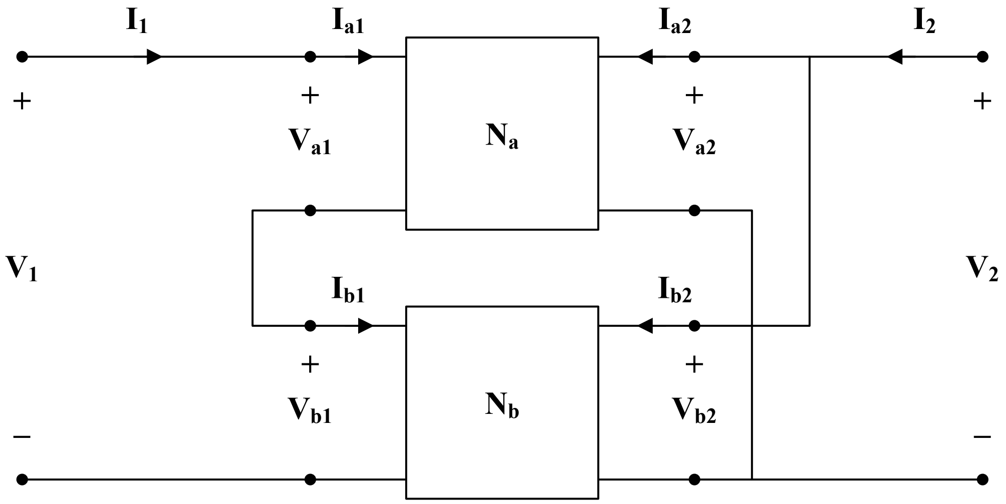

$$\mathbf{V}_{a1} = 25\mathbf{I}_{a1} + 4\mathbf{V}_{a2} \quad (1)$$
$$\mathbf{I}_{a2} = -4\mathbf{I}_{a1} + \mathbf{V}_{a2} \quad (2)$$
$$\mathbf{V}_{b1} = 16\mathbf{I}_{b1} + \mathbf{V}_{b2} \quad (3)$$
$$\mathbf{I}_{b2} = -\mathbf{I}_{b1} + 0.5\mathbf{V}_{b2} \quad (4)$$
$$\mathbf{V}_1 = \mathbf{V}_{a1} + \mathbf{V}_{b1}$$
$$\mathbf{V}_2 = \mathbf{V}_{a2} = \mathbf{V}_{b2}$$
$$\mathbf{I}_2 = \mathbf{I}_{a2} + \mathbf{I}_{b2}$$
$$\mathbf{I}_1 = \mathbf{I}_{a1}$$

Now, rewrite (1) to (4) in terms of $\mathbf{I}_1$ and $\mathbf{V}_2$

$$\mathbf{V}_{a1} = 25\mathbf{I}_1 + 4\mathbf{V}_2 \quad (5)$$
$$\mathbf{I}_{a2} = -4\mathbf{I}_1 + \mathbf{V}_2 \quad (6)$$
$$\mathbf{V}_{b1} = 16\mathbf{I}_{b1} + \mathbf{V}_2 \quad (7)$$
$$\mathbf{I}_{b2} = -\mathbf{I}_{b1} + 0.5\mathbf{V}_2 \quad (8)$$

Adding (5) and (7),

$$\mathbf{V}_1 = 25\mathbf{I}_1 + 16\mathbf{I}_{b1} + 5\mathbf{V}_2 \qquad (9)$$

Adding (6) and (8),

$$\mathbf{I}_2 = -4\mathbf{I}_1 - \mathbf{I}_{b1} + 1.5\mathbf{V}_2 \qquad (10)$$

$$\mathbf{I}_{b1} = \mathbf{I}_{a1} = \mathbf{I}_1 \qquad (11)$$

Because the two networks N_a and N_b are independent,

$$\mathbf{I}_2 = -5\mathbf{I}_1 + 1.5\mathbf{V}_2$$

or

$$\mathbf{V}_2 = 3.333\mathbf{I}_1 + 0.6667\mathbf{I}_2 \qquad (12)$$

Substituting (11) and (12) into (9),

$$\mathbf{V}_1 = 41\mathbf{I}_1 + \frac{25}{1.5}\mathbf{I}_1 + \frac{5}{1.5}\mathbf{I}_2$$

$$\mathbf{V}_1 = 57.67\mathbf{I}_1 + 3.333\mathbf{I}_2 \qquad (13)$$

Comparing (12) and (13) with the following equations

$$\mathbf{V}_1 = \mathbf{z}_{11}\mathbf{I}_1 + \mathbf{z}_{12}\mathbf{I}_2$$

$$\mathbf{V}_2 = \mathbf{z}_{21}\mathbf{I}_1 + \mathbf{z}_{22}\mathbf{I}_2$$

indicates that

$$[\mathbf{z}] = \underline{\begin{bmatrix} \mathbf{57.67} & \mathbf{3.333} \\ \mathbf{3.333} & \mathbf{0.6667} \end{bmatrix}\Omega}$$

Alternatively,

$$[\mathbf{h}_a] = \begin{bmatrix} 25 & 4 \\ -4 & 1 \end{bmatrix}, \qquad [\mathbf{h}_b] = \begin{bmatrix} 16 & 1 \\ -1 & 0.5 \end{bmatrix}$$

$$[\mathbf{h}] = [\mathbf{h}_a] + [\mathbf{h}_b] = \begin{bmatrix} 41 & 5 \\ -5 & 1.5 \end{bmatrix} \qquad \Delta_h = 61.5 + 25 = 86.5$$

$$[\mathbf{z}] = \begin{bmatrix} \dfrac{\Delta_h}{\mathbf{h}_{22}} & \dfrac{\mathbf{h}_{12}}{\mathbf{h}_{22}} \\ \dfrac{-\mathbf{h}_{21}}{\mathbf{h}_{22}} & \dfrac{1}{\mathbf{h}_{22}} \end{bmatrix} = \underline{\begin{bmatrix} \mathbf{57.67} & \mathbf{3.333} \\ \mathbf{3.333} & \mathbf{0.6667} \end{bmatrix}\Omega}$$

as obtained previously.

Chapter 19, Solution 73.

From Example 18.14 and the cascade two-ports,

$$[\mathbf{T}_a] = [\mathbf{T}_b] = \begin{bmatrix} 2 & 3 \\ 1 & 2 \end{bmatrix}$$

$$[\mathbf{T}] = [\mathbf{T}_a][\mathbf{T}_b] = \begin{bmatrix} 2 & 3 \\ 1 & 2 \end{bmatrix}\begin{bmatrix} 2 & 3 \\ 1 & 2 \end{bmatrix} = \underline{\begin{bmatrix} \mathbf{7} & \mathbf{12\,\Omega} \\ \mathbf{4\,S} & \mathbf{7} \end{bmatrix}}$$

When the output is short-circuited, $\mathbf{V}_2 = 0$ and by definition

$$\mathbf{V}_1 = -\mathbf{B}\mathbf{I}_2, \qquad \mathbf{I}_1 = -\mathbf{D}\mathbf{I}_2$$

Hence,

$$\mathbf{Z}_{in} = \frac{\mathbf{V}_1}{\mathbf{I}_1} = \frac{\mathbf{B}}{\mathbf{D}} = \underline{\frac{\mathbf{12}}{\mathbf{7}}\,\Omega}$$

Chapter 19, Solution 74.

From Prob. 18.35, the transmission parameters for the circuit in Figs. (a) and (b) are

$$[\mathbf{T}_a] = \begin{bmatrix} 1 & \mathbf{Z} \\ 0 & 1 \end{bmatrix}, \qquad [\mathbf{T}_b] = \begin{bmatrix} 1 & 0 \\ 1/\mathbf{Z} & 1 \end{bmatrix}$$

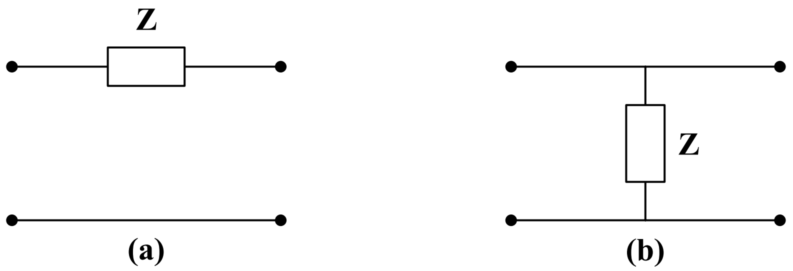

We partition the given circuit into six subcircuits similar to those in Figs. (a) and (b) as shown in Fig. (c) and obtain $[\mathbf{T}]$ for each.

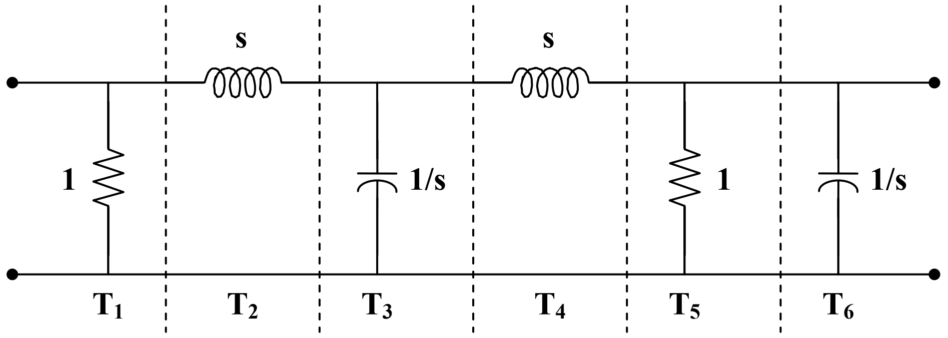

$$[\mathbf{T}_1]=\begin{bmatrix}1 & 0\\ 1 & 1\end{bmatrix}, \qquad [\mathbf{T}_2]=\begin{bmatrix}1 & s\\ 0 & 1\end{bmatrix}, \qquad [\mathbf{T}_3]=\begin{bmatrix}1 & 0\\ s & 1\end{bmatrix}$$

$$[\mathbf{T}_4]=[\mathbf{T}_2], \qquad [\mathbf{T}_5]=[\mathbf{T}_1], \qquad [\mathbf{T}_6]=[\mathbf{T}_3]$$

$$[\mathbf{T}]=[\mathbf{T}_1][\mathbf{T}_2][\mathbf{T}_3][\mathbf{T}_4][\mathbf{T}_5][\mathbf{T}_6]=[\mathbf{T}_1][\mathbf{T}_2][\mathbf{T}_3][\mathbf{T}_4]\begin{bmatrix}1 & 0\\ 1 & 1\end{bmatrix}\begin{bmatrix}1 & 0\\ s & 1\end{bmatrix}$$

$$=[\mathbf{T}_1][\mathbf{T}_2][\mathbf{T}_3][\mathbf{T}_4]\begin{bmatrix}1 & 0\\ s+1 & 1\end{bmatrix}=[\mathbf{T}_1][\mathbf{T}_2][\mathbf{T}_3]\begin{bmatrix}1 & s\\ 0 & 1\end{bmatrix}\begin{bmatrix}1 & 0\\ s+1 & 1\end{bmatrix}$$

$$=[\mathbf{T}_1][\mathbf{T}_2]\begin{bmatrix}1 & 0\\ s & 1\end{bmatrix}\begin{bmatrix}s^2+s+1 & s\\ s+1 & 1\end{bmatrix}$$

$$=[\mathbf{T}_1]\begin{bmatrix}1 & s\\ 0 & 1\end{bmatrix}\begin{bmatrix}s^2+s+1 & s\\ s^3+s^2+2s+1 & s^2+1\end{bmatrix}$$

$$=\begin{bmatrix}1 & 0\\ 1 & 1\end{bmatrix}\begin{bmatrix}s^4+s^3+3s^2+2s+1 & s^3+2s\\ s^3+s^2+2s+1 & s^2+1\end{bmatrix}$$

$$[\mathbf{T}]=\underline{\begin{bmatrix}\mathbf{s^4+s^3+3s^2+2s+1} & \mathbf{s^3+2s}\\ \mathbf{s^4+2s^3+4s^2+4s+2} & \mathbf{s^3+s^2+2s+1}\end{bmatrix}}$$

Note that $\mathbf{AB}-\mathbf{CD}=1$ as expected.

Chapter 19, Solution 75.

(a) We convert [z_a] and [z_b] to T-parameters. For N_a, $\Delta_z = 40-24=16$.

$$[T_a]=\begin{bmatrix}z_{11}/z_{21} & \Delta_z/z_{21}\\ 1/z_{21} & z_{22}/z_{21}\end{bmatrix}=\begin{bmatrix}2 & 4\\ 0.25 & 1.25\end{bmatrix}$$

For N_b, $\Delta_y = 80+8=88$.

$$[T_b]=\begin{bmatrix}-y_{22}/y_{21} & -1/y_{21}\\ -\Delta_y/y_{21} & -y_{11}/y_{21}\end{bmatrix}=\begin{bmatrix}-5 & -0.5\\ -44 & -4\end{bmatrix}$$

$$[T] = [T_a][T_b] = \begin{bmatrix} -186 & -17 \\ -56.25 & -5.125 \end{bmatrix}$$

We convert this to y-parameters. $\Delta_T = AD - BC = -3.$

$$[y] = \begin{bmatrix} D/B & -\Delta_T/B \\ -1/B & A/B \end{bmatrix} = \underline{\begin{bmatrix} 0.3015 & -0.1765 \\ 0.0588 & 10.94 \end{bmatrix}}$$

(b) The equivalent z-parameters are

$$[z] = \begin{bmatrix} A/C & \Delta_T/C \\ 1/C & D/C \end{bmatrix} = \begin{bmatrix} 3.3067 & 0.0533 \\ -0.0178 & 0.0911 \end{bmatrix}$$

Consider the equivalent circuit below.

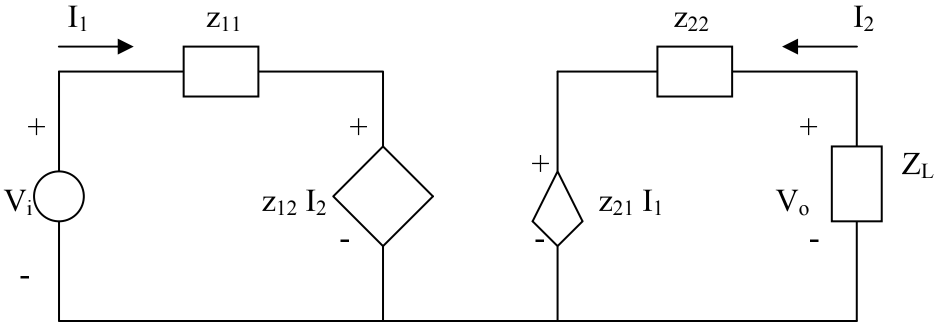

$$V_i = z_{11}I_1 + z_{12}I_2 \qquad (1)$$

$$V_o = z_{21}I_1 + z_{22}I_2 \qquad (2)$$

But $V_o = -I_2Z_L \longrightarrow I_2 = -V_o/Z_L \qquad (3)$

From (2) and (3) ,

$$V_o = z_{21}I_1 - z_{22}\frac{V_o}{Z_L} \longrightarrow I_1 = V_o\left(\frac{1}{z_{21}} + \frac{z_{22}}{Z_L z_{21}}\right) \qquad (4)$$

Substituting (3) and (4) into (1) gives

$$\frac{V_i}{V_o} = \left(\frac{z_{11}}{z_{21}} + \frac{z_{11}z_{22}}{z_{21}Z_L}\right) - \frac{z_{12}}{Z_L} = -194.3 \longrightarrow \underline{\frac{V_{o.}}{V_i} = -0.0051}$$

Chapter 19, Solution 76.

To get z_{11} and z_{21}, we open circuit the output port and let $I_1 = 1A$ so that

$$z_{11} = \frac{V_1}{I_1} = V_1, \qquad z_{21} = \frac{V_2}{I_1} = V_2$$

The schematic is shown below. After it is saved and run, we obtain

$$z_{11} = V_1 = 3.849, \qquad z_{21} = V_2 = 1.122$$

Similarly, to get z_{22} and z_{12}, we open circuit the input port and let $I_2 = 1A$ so that

$$z_{12} = \frac{V_1}{I_2} = V_1, \qquad z_{22} = \frac{V_2}{I_2} = V_2$$

The schematic is shown below. After it is saved and run, we obtain

$$z_{12} = V_1 = 1.122, \qquad z_{22} = V_2 = 3.849$$

Thus,

$$\underline{[z] = \begin{bmatrix} 3.949 & 1.122 \\ 1.122 & 3.849 \end{bmatrix} \Omega}$$

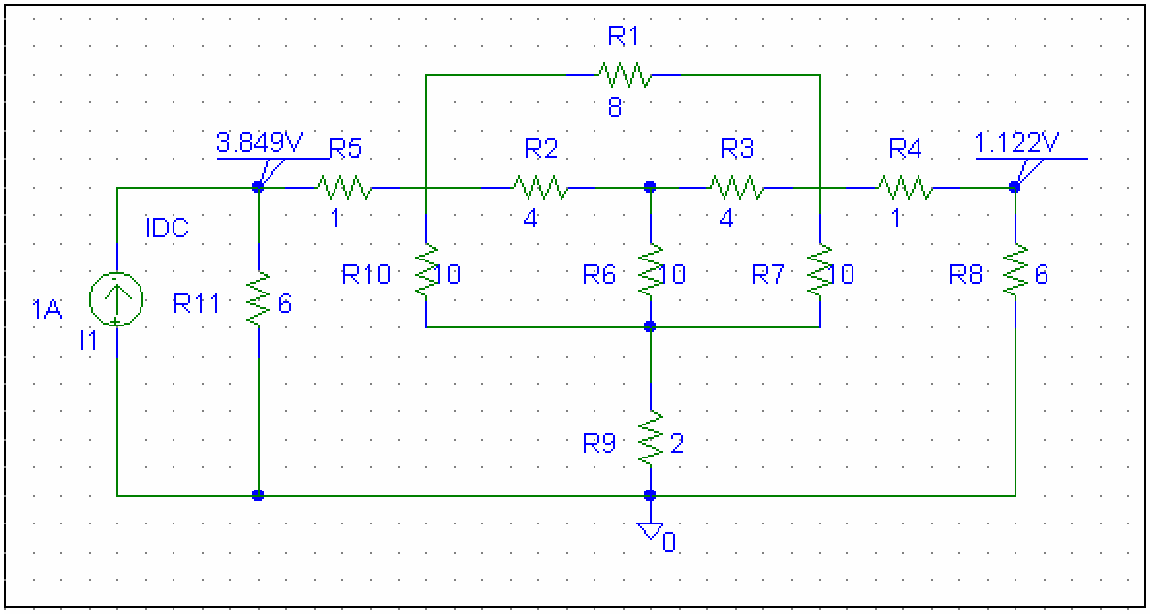

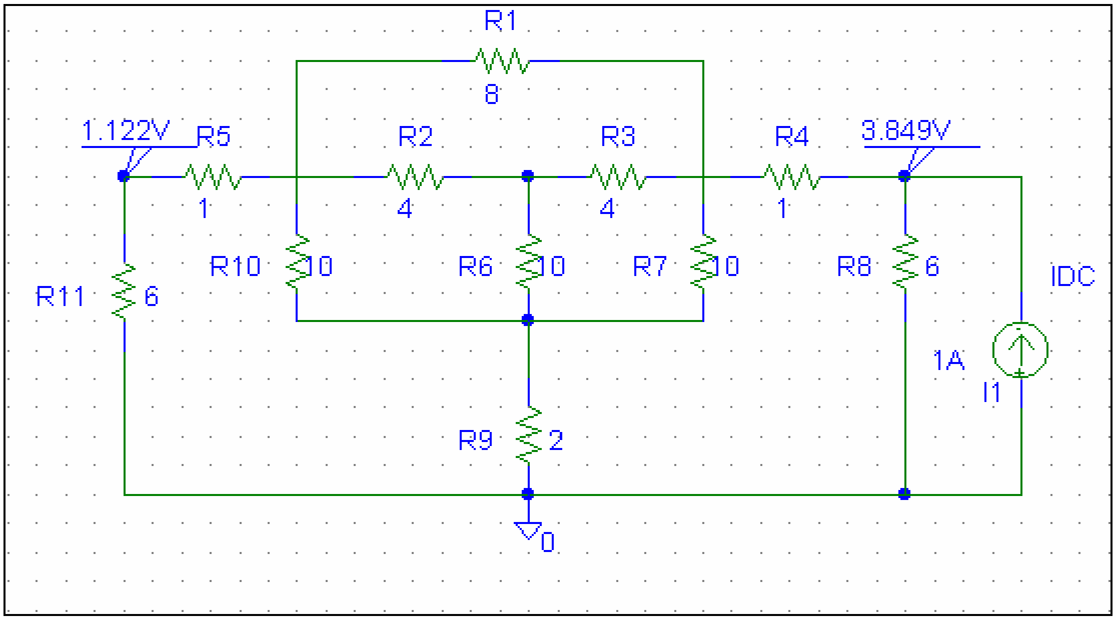

Chapter 19, Solution 77.

We follow Example 19.15 except that this is an AC circuit.

(a) We set $V_2 = 0$ and $I_1 = 1$ A. The schematic is shown below. In the AC Sweep Box, set Total Pts = 1, Start Freq = 0.1592, and End Freq = 0.1592. After simulation, the output file includes

FREQ	IM(V_PRINT2)	IP(V_PRINT2)
1.592 E–01	3.163 E–.01	–1.616 E+02

FREQ	VM($N_0001)	VP($N_0001)
1.592 E–01	9.488 E–01	–1.616 E+02

From this we obtain

$$h_{11} = V_1/1 = 0.9488\angle{-161.6^\circ}$$

$$h_{21} = I_2/1 = 0.3163\angle{-161.6^\circ}.$$

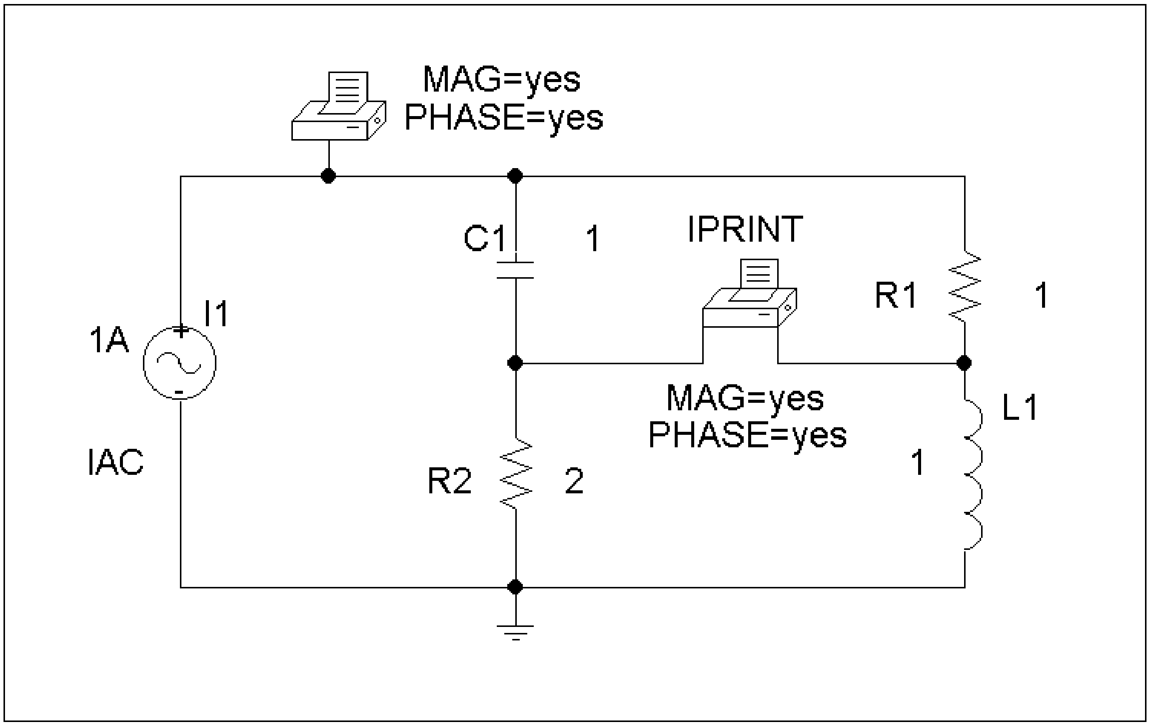

(b) In this case, we set $I_1 = 0$ and $V_2 = 1V$. The schematic is shown below. In the AC Sweep box, we set Total Pts = 1, Start Freq = 0.1592, and End Freq = 0.1592. After simulation, we obtain an output file which includes

FREQ	VM($N_0001)	VP($N_0001)
1.592 E–01	3.163 E–.01	1.842 E+01

FREQ	IM(V_PRINT2)	IP(V_PRINT2)
1.592 E–01	9.488 E–01	–1.616 E+02

From this,

$$h_{12} = V_1/1 = 0.3163\angle 18.42^\circ$$

$$h_{21} = I_2/1 = 0.9488\angle -161.6^\circ.$$

Thus,

$$[h] = \underline{\begin{bmatrix} \mathbf{0.9488\angle-161.6^\circ} & \mathbf{0.3163\angle 18.42^\circ} \\ \mathbf{0.3163\angle-161.6^\circ} & \mathbf{0.9488\angle-161.6^\circ} \end{bmatrix}}$$

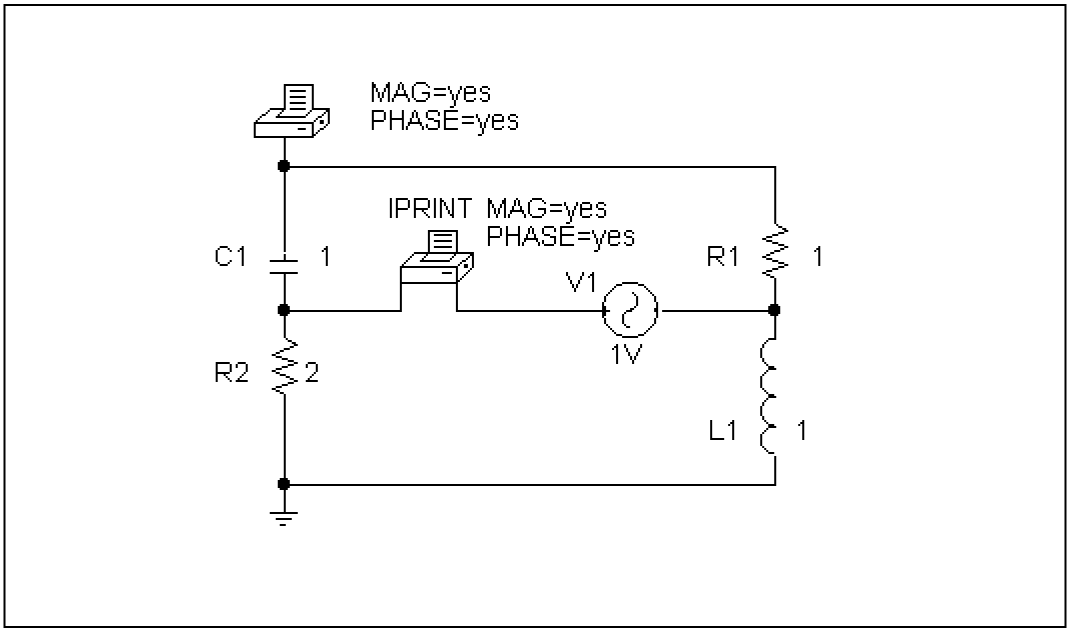

Chapter 19, Solution 78

For h_{11} and h_{21}, short-circuit the output port and let $I_1 = 1A$. $f = \omega / 2\pi = 0.6366$. The schematic is shown below. When it is saved and run, the output file contains the following:

```
FREQ        IM(V_PRINT1)IP(V_PRINT1)

   6.366E-01   1.202E+00   1.463E+02

  FREQ        VM($N_0003) VP($N_0003)

   6.366E-01   3.771E+00  -1.350E+02
```

From the output file, we obtain

$$I_2 = 1.202\angle 146.3^o, \qquad V_1 = 3.771\angle -135^o$$

so that

$$h_{11} = \frac{V_1}{1} = 3.771\angle -135^o, \qquad h_{21} = \frac{I_2}{1} = 1.202\angle 146.3^o$$

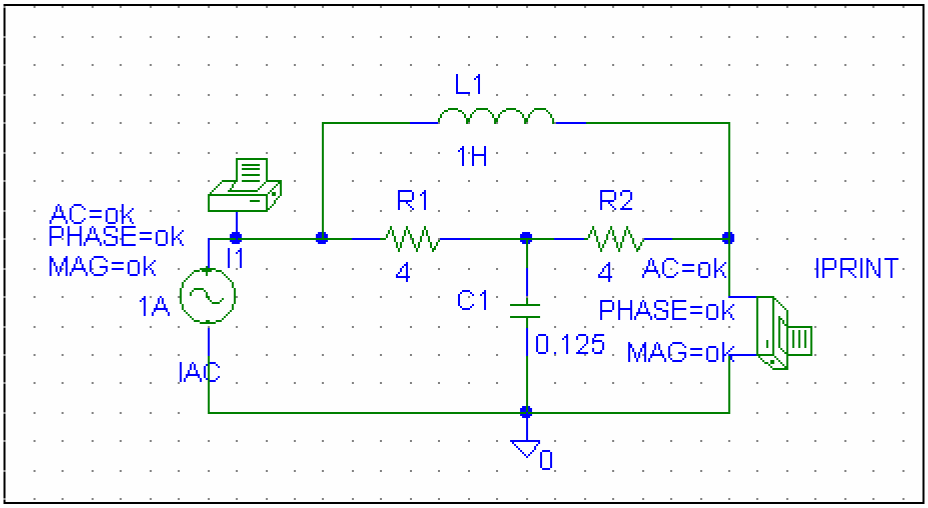

For h_{12} and h_{22}, open-circuit the input port and let $V_2 = 1V$. The schematic is shown below. When it is saved and run, the output file includes:

```
FREQ         VM($N_0003) VP($N_0003)

 6.366E-01   1.202E+00   -3.369E+01

FREQ         IM(V_PRINT1)IP(V_PRINT1)

 6.366E-01   3.727E-01   -1.534E+02
```

From the output file, we obtain

$$I_2 = 0.3727\angle -153.4^o, \qquad V_1 = 1.202\angle -33.69^o$$

so that

$$h_{12} = \frac{V_1}{1} = 1.202\angle -33.69^o, \qquad h_{22} = \frac{I_2}{1} = 0.3727\angle -153.4^o$$

Thus,

$$[h] = \begin{bmatrix} 3.771\angle -135^o & 1.202\angle -33.69^o \\ 1.202\angle 146.3 & 0.3727\angle -153.4^o \end{bmatrix}$$

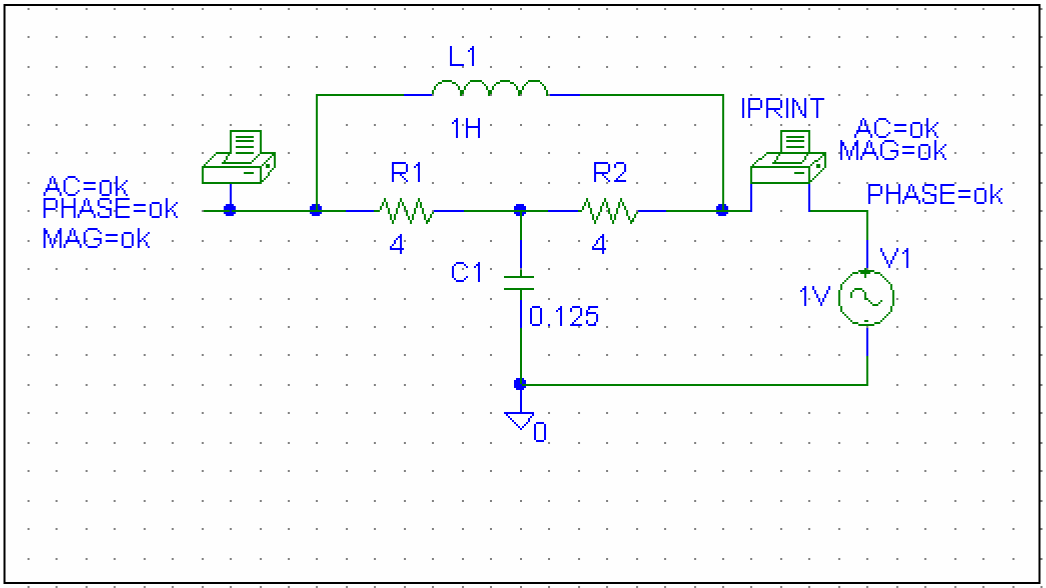

Chapter 19, Solution 79

We follow Example 19.16.

(a) We set $I_1 = 1$ A and open-circuit the output-port so that $I_2 = 0$. The schematic is shown below with two VPRINT1s to measure V_1 and V_2. In the AC Sweep box, we enter Total Pts = 1, Start Freq = 0.3183, and End Freq = 0.3183. After simulation, the output file includes

FREQ	VM(1)	VP(1)
3.183 E–01	4.669 E+00	–1.367 E+02

FREQ	VM(4)	VP(4)
3.183 E–01	2.530 E+00	–1.084 E+02

From this,

$$z_{11} = V_1/I_1 = 4.669\angle{-136.7°}/1 = 4.669\angle{-136.7°}$$

$$z_{21} = V_2/I_1 = 2.53\angle{-108.4°}/1 = 2.53\angle{-108.4°}.$$

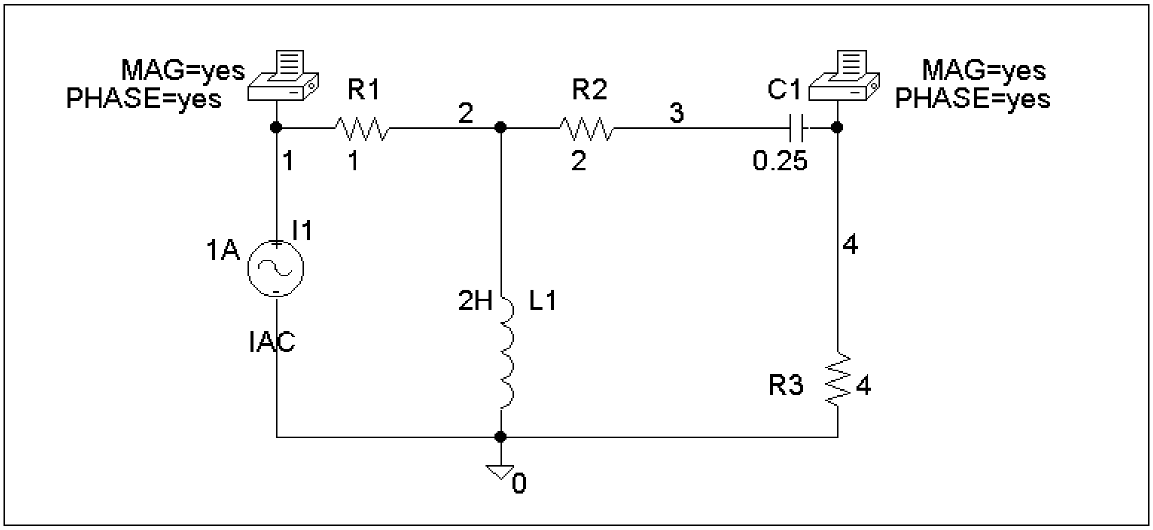

(b) In this case, we let I_2 = 1 A and open-circuit the input port. The schematic is shown below. In the AC Sweep box, we type Total Pts = 1, Start Freq = 0.3183, and End Freq = 0.3183. After simulation, the output file includes

FREQ	VM(1)	VP(1)
3.183 E–01	2.530 E+00	–1.084 E+02

FREQ	VM(2)	VP(2)
3.183 E–01	1.789 E+00	–1.534 E+02

From this,

$$z_{12} = V_1/I_2 = 2.53\angle{-108.4°}/1 = 2.53\angle{-108..4°}$$

$$z_{22} = V_2/I_2 = 1.789\angle{-153.4°}/1 = 1.789\angle{-153.4°}.$$

Thus,

$$[z] = \underline{\begin{bmatrix} \mathbf{4.669\angle-136.7°} & \mathbf{2.53\angle-108.4°} \\ \mathbf{2.53\angle-108.4°} & \mathbf{1.789\angle-153.4°} \end{bmatrix}}$$

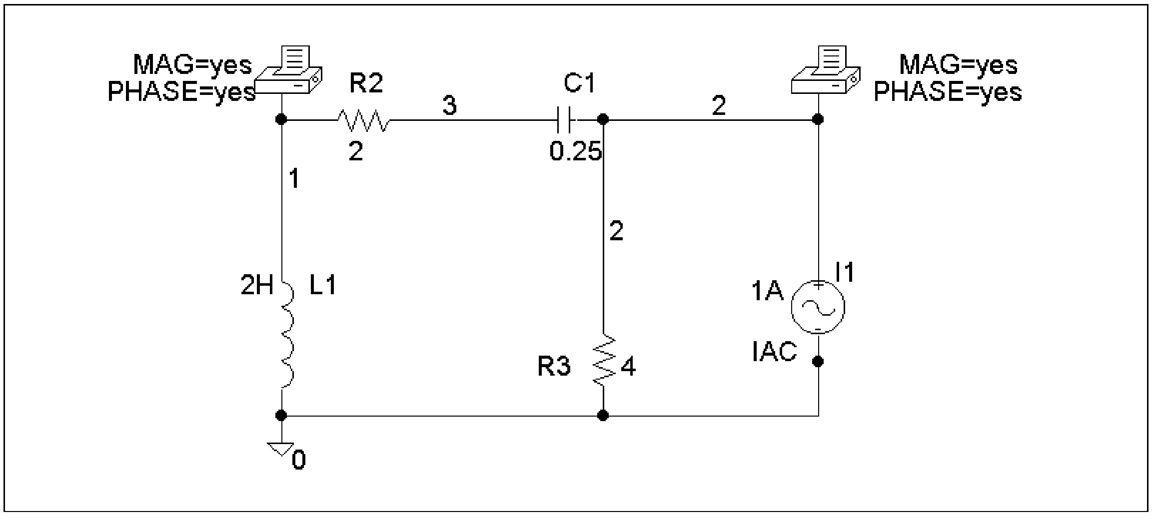

Chapter 19, Solution 80

To get z_{11} and z_{21}, we open circuit the output port and let $I_1 = 1A$ so that

$$z_{11} = \frac{V_1}{I_1} = V_1, \qquad z_{21} = \frac{V_2}{I_1} = V_2$$

The schematic is shown below. After it is saved and run, we obtain

$$z_{11} = V_1 = 29.88, \qquad z_{21} = V_2 = -70.37$$

Similarly, to get z_{22} and z_{12}, we open circuit the input port and let $I_2 = 1A$ so that

$$z_{12} = \frac{V_1}{I_2} = V_1, \qquad z_{22} = \frac{V_2}{I_2} = V_2$$

The schematic is shown below. After it is saved and run, we obtain

$$z_{12} = V_1 = 3.704, \qquad z_{22} = V_2 = 11.11$$

Thus,

$$[z] = \underline{\begin{bmatrix} 29.88 & 3.704 \\ -70.37 & 11.11 \end{bmatrix}\Omega}$$

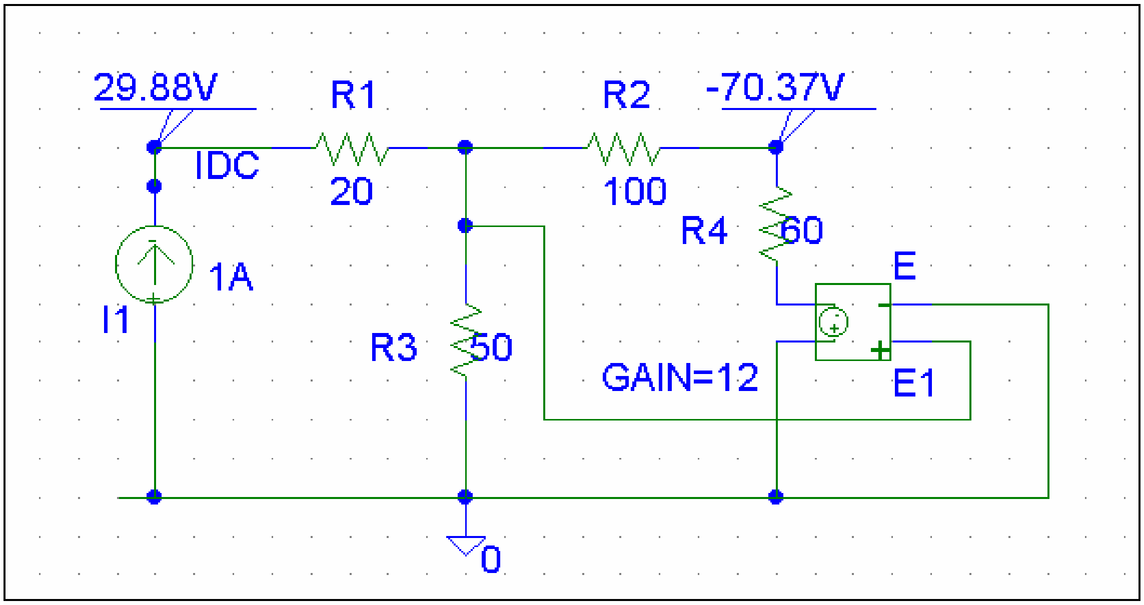

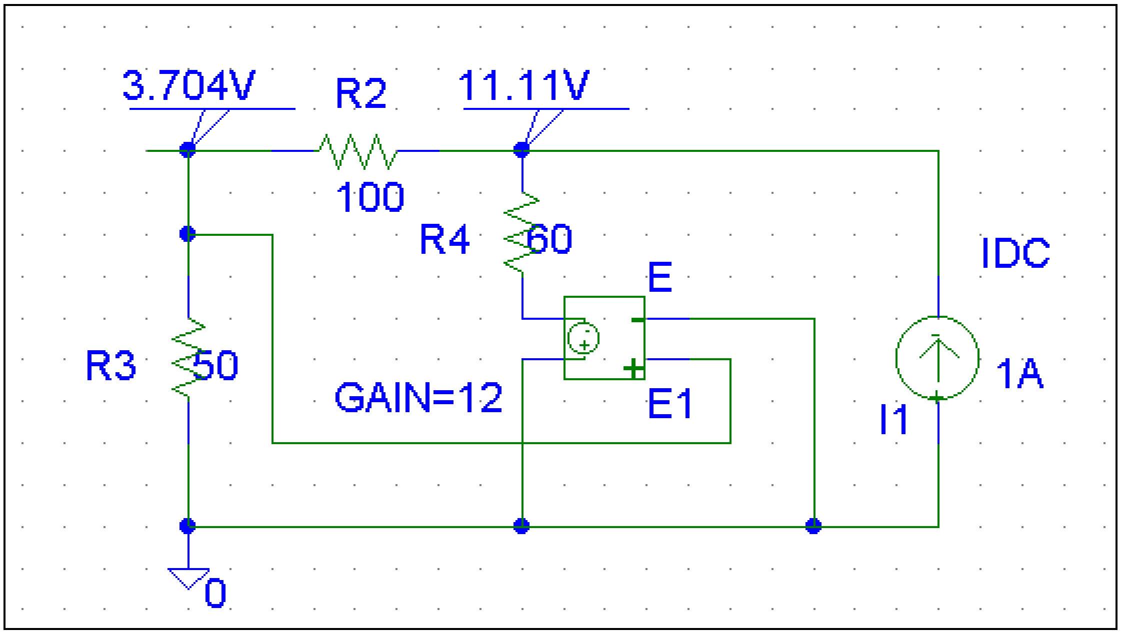

Chapter 19, Solution 81

(a) We set $V_1 = 1$ and short circuit the output port. The schematic is shown below. After simulation we obtain

$$y_{11} = I_1 = 1.5, \; y_{21} = I_2 = 3.5$$

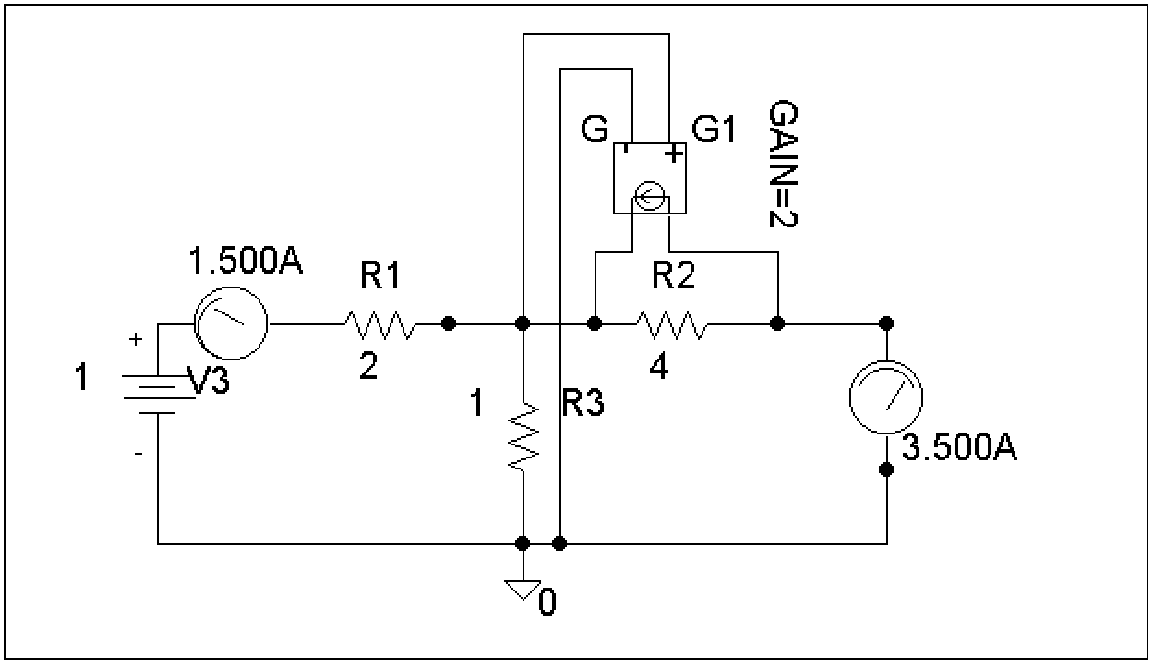

(b) We set $V_2 = 1$ and short-circuit the input port. The schematic is shown below. Upon simulating the circuit, we obtain

$$y_{12} = I_1 = -0.5, \; y_{22} = I_2 = 1.5$$

$$[Y] = \underline{\begin{bmatrix} \mathbf{1.5} & \mathbf{-0.5} \\ \mathbf{3.5} & \mathbf{1.5} \end{bmatrix}}$$

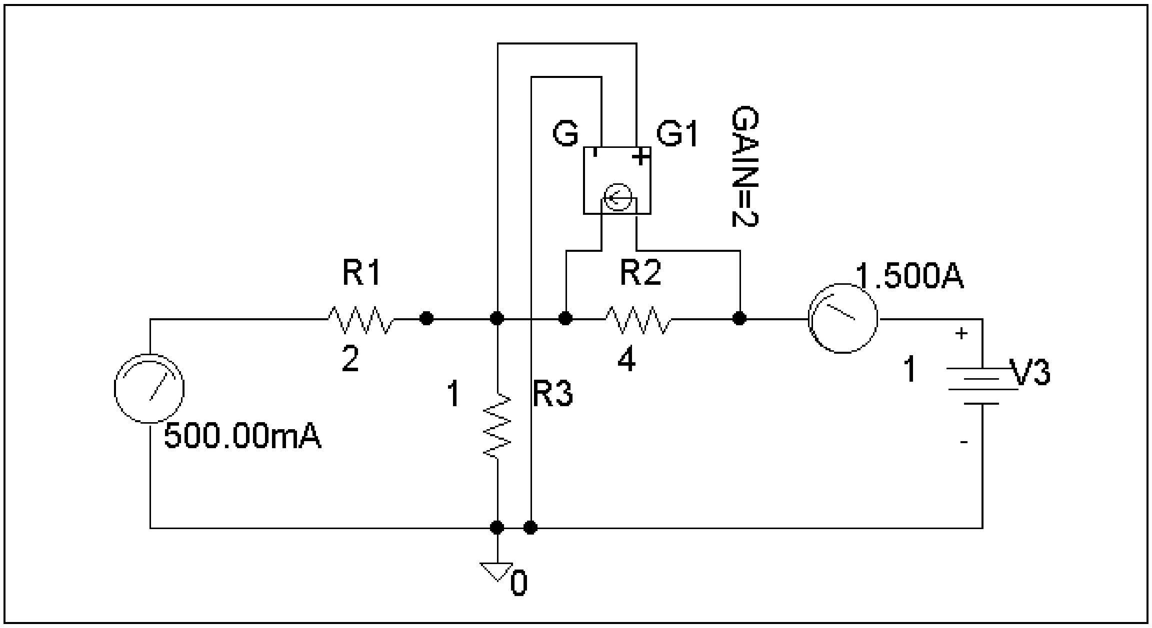

Chapter 19, Solution 82

We follow Example 19.15.

(a) Set $V_2 = 0$ and $I_1 = 1A$. The schematic is shown below. After simulation, we obtain

$$h_{11} = V_1/1 = 3.8, \quad h_{21} = I_2/1 = 3.6$$

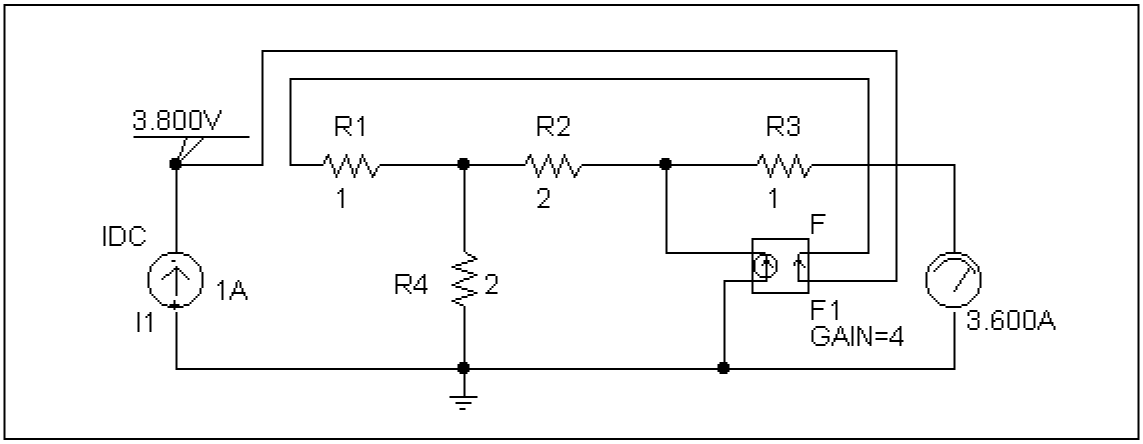

(b) Set $V_1 = 1$ V and $I_1 = 0$. The schematic is shown below. After simulation, we obtain

$$h_{12} = V_1/1 = 0.4, \quad h_{22} = I_2/1 = 0.25$$

Hence, $$[h] = \underline{\begin{bmatrix} \mathbf{3.8} & \mathbf{0.4} \\ \mathbf{3.6} & \mathbf{0.25} \end{bmatrix}}$$

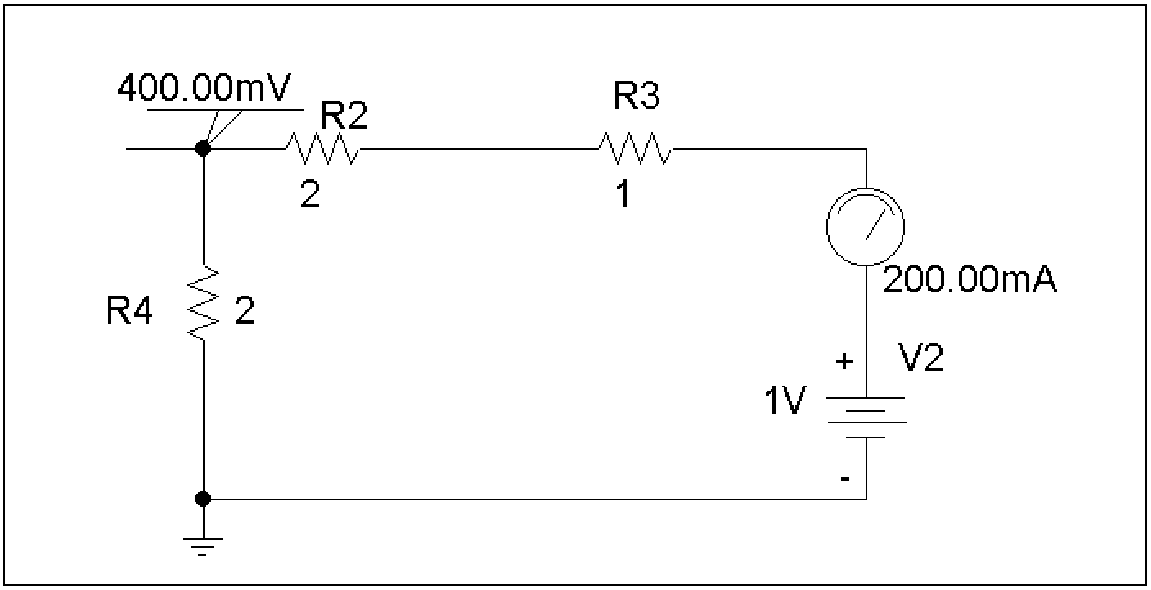

Chapter 19, Solution 83

To get A and C, we open-circuit the output and let $I_1 = 1A$. The schematic is shown below. When the circuit is saved and simulated, we obtain $V_1 = 11$ and $V_2 = 34$.

$$A = \frac{V_1}{V_2} = 0.3235, \qquad C = \frac{I_1}{V_2} = \frac{1}{34} = 0.02941$$

Similarly, to get B and D, we open-circuit the output and let $I_1 = 1A$. The schematic is shown below. When the circuit is saved and simulated, we obtain $V_1 = 2.5$ and $I_2 = -2.125$.

$$B = -\frac{V_1}{I_2} = \frac{2.5}{2.125} = 1.1765, \qquad D = -\frac{I_1}{I_2} = \frac{1}{2.125} = 0.4706$$

Thus,

$$\underline{[T] = \begin{bmatrix} 0.3235 & 1.1765 \\ 0.02941 & 0.4706 \end{bmatrix}}$$

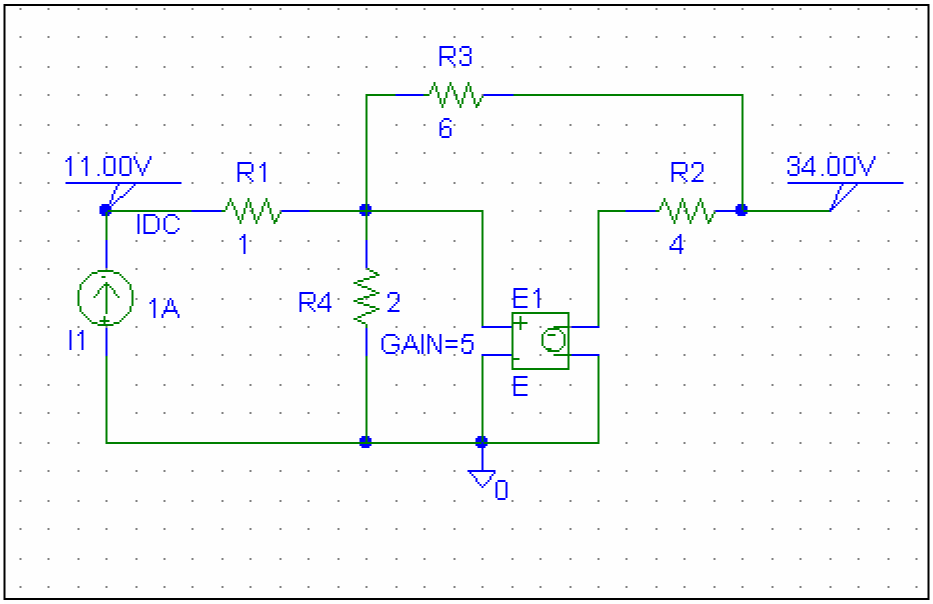

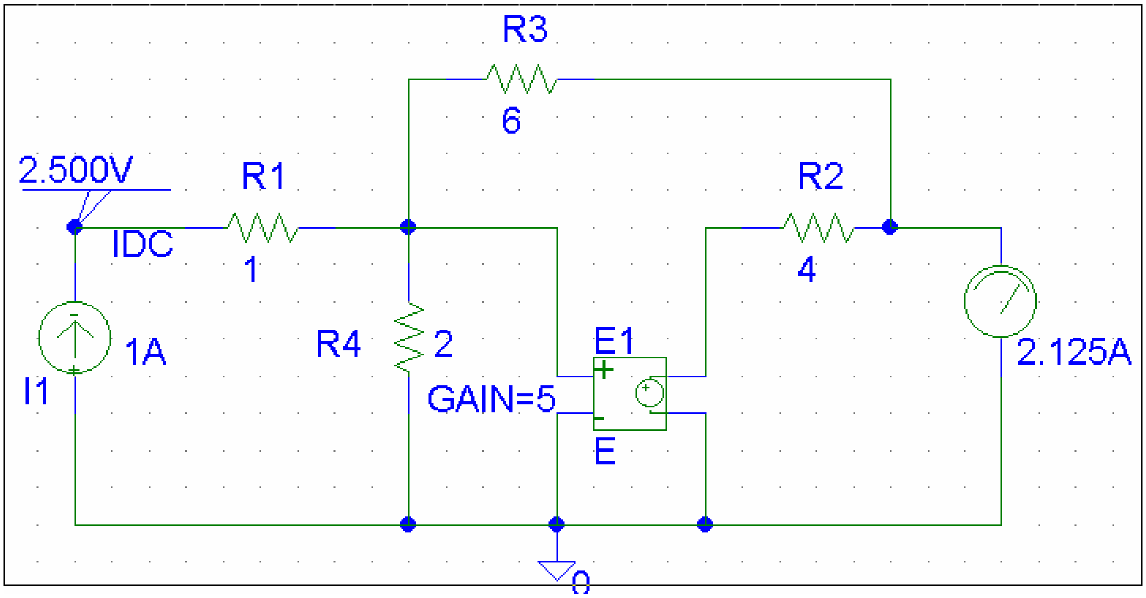

Chapter 19, Solution 84

(a) Since $A = \left.\frac{V_1}{V_2}\right|_{I_2=0}$ and $C = \left.\frac{I_1}{V_2}\right|_{I_2=0}$, we open-circuit the output port and let V_1 = 1 V. The schematic is as shown below. After simulation, we obtain

$$A = 1/V_2 = 1/0.7143 = 1.4$$
$$C = I_2/V_2 = 1.0/0.7143 = 1.4$$

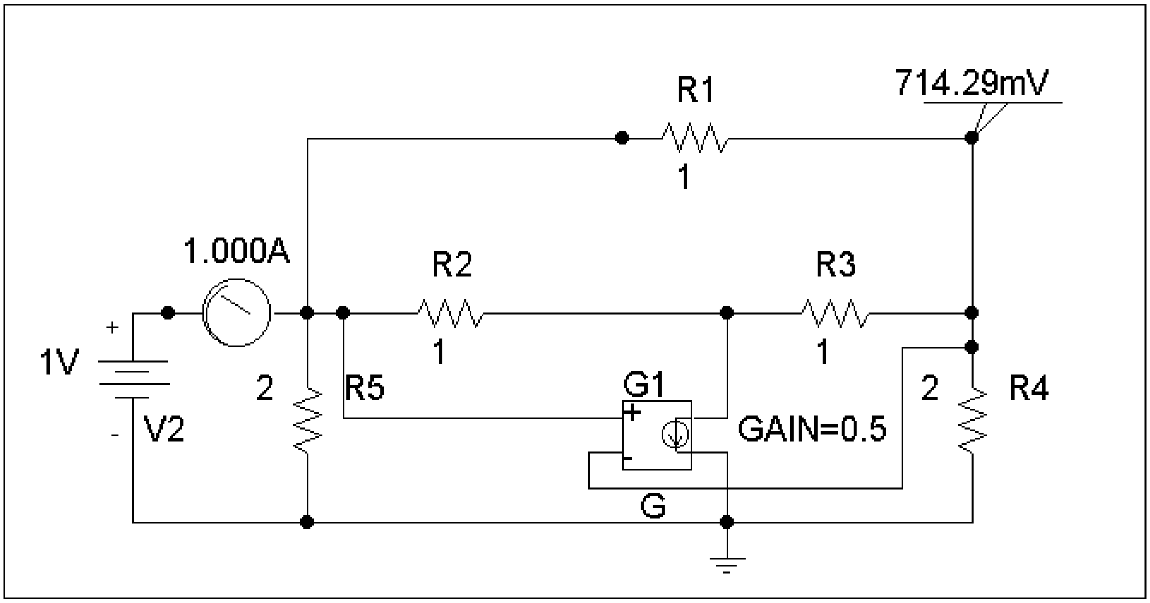

(b) To get B and D, we short-circuit the output port and let $V_1 = 1$. The schematic is shown below. After simulating the circuit, we obtain

$$B = -V_1/I_2 = -1/1.25 = -0.8$$
$$D = -I_1/I_2 = -2.25/1.25 = -1.8$$

Thus
$$\begin{bmatrix} A & B \\ C & D \end{bmatrix} = \underline{\begin{bmatrix} \mathbf{1.4} & \mathbf{-0.8} \\ \mathbf{1.4} & \mathbf{-1.8} \end{bmatrix}}$$

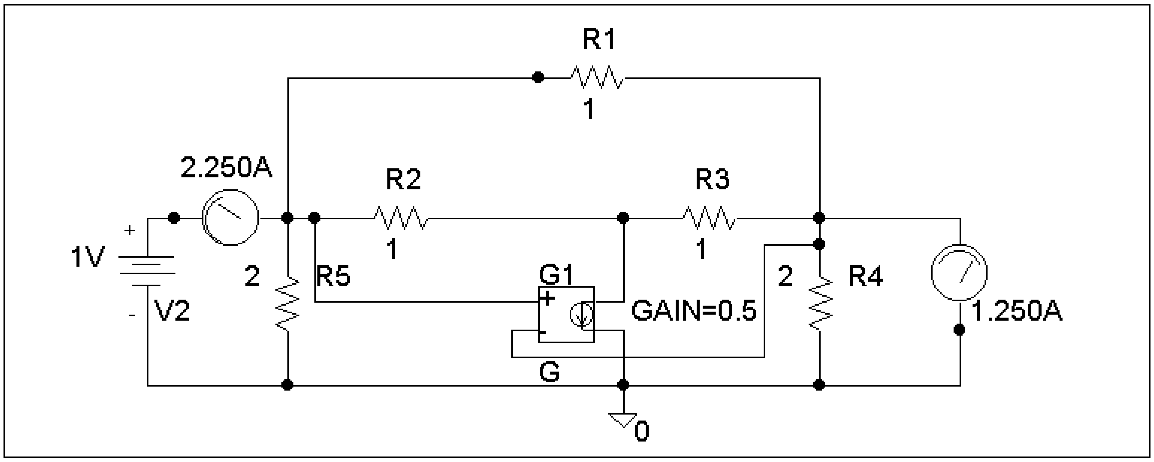

Chapter 19, Solution 85

(a) Since $A = \left.\dfrac{V_1}{V_2}\right|_{I_2=0}$ and $C = \left.\dfrac{I_1}{V_2}\right|_{I_2=0}$, we let $V_1 = 1$ V and open-circuit the output port. The schematic is shown below. In the AC Sweep box, we set Total Pts = 1, Start Freq = 0.1592, and End Freq = 0.1592. After simulation, we obtain an output file which includes

FREQ	IM(V_PRINT1)	IP(V_PRINT1)
1.592 E–01	6.325 E–01	1.843 E+01

FREQ	VM($N_0002)	VP($N_0002)
1.592 E–01	6.325 E–01	–7.159 E+01

From this, we obtain

$$A = \frac{1}{V_2} = \frac{1}{0.6325\angle -71.59^\circ} = 1.581\angle 71.59^\circ$$

$$C = \frac{I_1}{V_2} = \frac{0.6325\angle 18.43^\circ}{0.6325\angle -71.59^\circ} = 1\angle 90^\circ \;=\; j$$

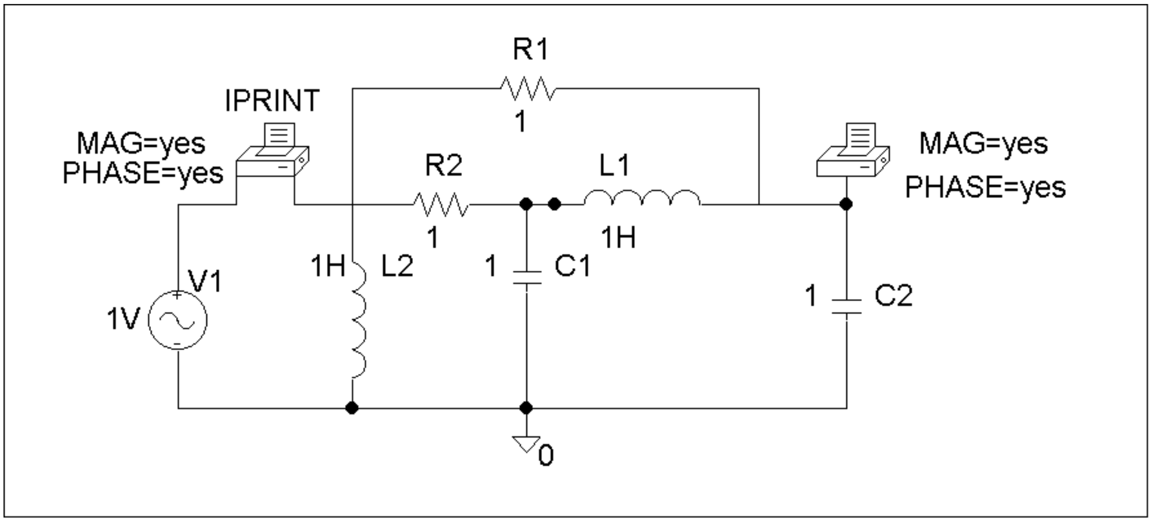

(b) Similarly, since $B = \left.\frac{V_1}{I_2}\right|_{V_2=0}$ and $D = -\left.\frac{I_1}{I_2}\right|_{V_2=0}$, we let $V_1 = 1$ V and short-circuit the output port. The schematic is shown below. Again, we set Total Pts = 1, Start Freq = 0.1592, and End Freq = 0.1592 in the AC Sweep box. After simulation, we get an output file which includes the following results:

FREQ	IM(V_PRINT1)	IP(V_PRINT1)
1.592 E–01	5.661 E–04	8.997 E+01

FREQ	IM(V_PRINT3)	IP(V_PRINT3)
1.592 E–01	9.997 E–01	–9.003 E+01

From this,

$$B = -\frac{1}{I_2} = -\frac{1}{0.9997\angle -90^\circ} = -1\angle 90^\circ = -j$$

$$D = -\frac{I_1}{I_2} = -\frac{5.661\text{x}10^{-4}\angle 89.97^\circ}{0.9997\angle -90^\circ} \;=\; 5.561\text{x}10^{-4}$$

$$\begin{bmatrix} A & B \\ C & D \end{bmatrix} = \underline{\begin{bmatrix} \mathbf{1.581\angle 71.59^\circ} & \mathbf{-j} \\ \mathbf{j} & \mathbf{5.661x10^{-4}} \end{bmatrix}}$$

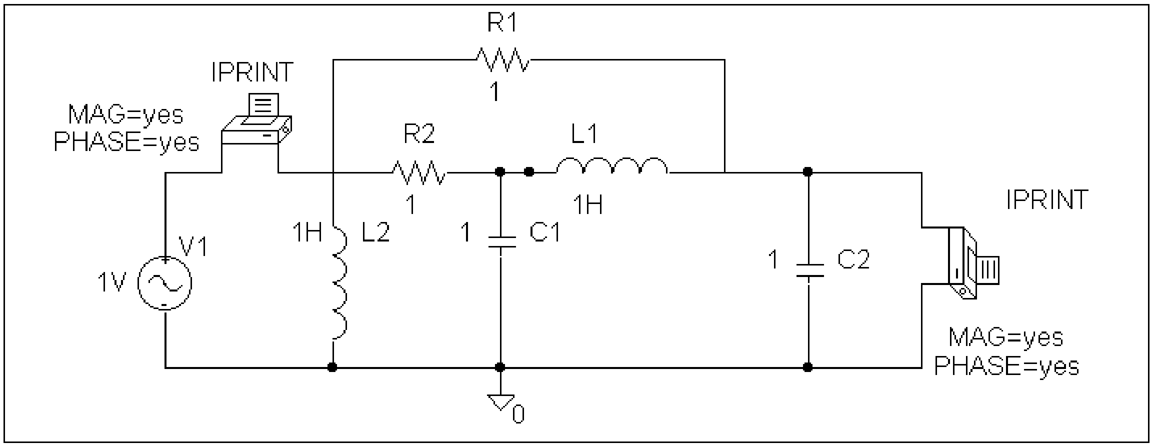

Chapter 19, Solution 86

(a) By definition, $g_{11} = \left.\dfrac{I_1}{V_1}\right|_{I_2=0}$, $g_{21} = \left.\dfrac{V_1}{V_2}\right|_{I_2=0}$.

We let $V_1 = 1$ V and open-circuit the output port. The schematic is shown below. After simulation, we obtain

$$g_{11} = I_1 = 2.7$$
$$g_{21} = V_2 = 0.0$$

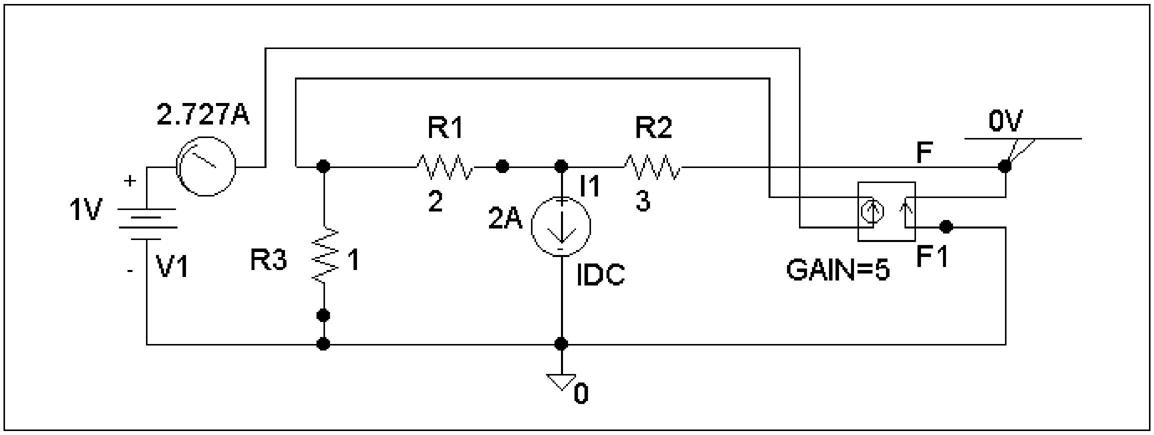

(b) Similarly,

$$g_{12} = \left.\frac{I_1}{I_2}\right|_{V_1=0}, \quad g_{22} = \left.\frac{V_2}{I_2}\right|_{V_1=0}$$

We let $I_2 = 1$ A and short-circuit the input port. The schematic is shown below. After simulation,

$$g_{12} = I_1 = 0$$

$$g_{22} = V_2 = 0$$

Thus
$$[g] = \begin{bmatrix} \mathbf{2.727S} & \mathbf{0} \\ \mathbf{0} & \mathbf{0} \end{bmatrix}$$

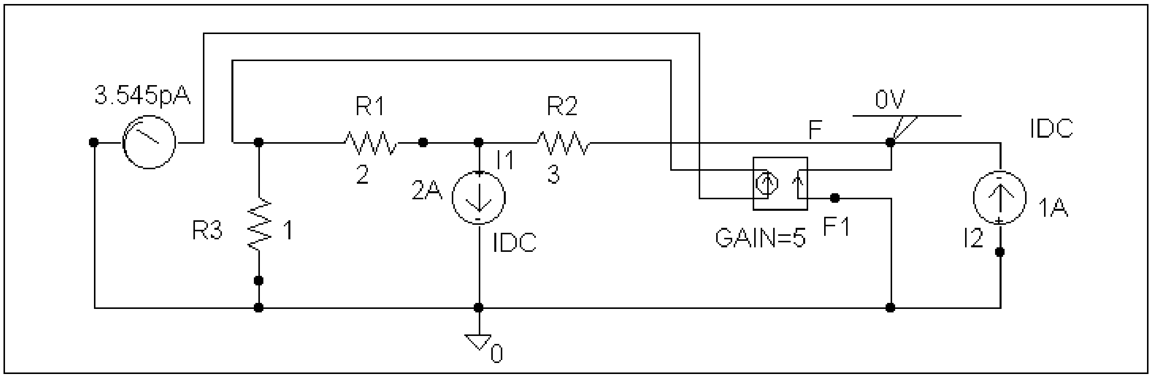

Chapter 19, Solution 87

(a) Since $a = \left.\dfrac{V_2}{V_1}\right|_{I_1=0}$ and $c = \left.\dfrac{I_2}{V_1}\right|_{I_1=0}$,

we open-circuit the input port and let $V_2 = 1$ V. The schematic is shown below. In the AC Sweep box, set Total Pts = 1, Start Freq = 0.1592, and End Freq = 0.1592. After simulation, we obtain an output file which includes

FREQ	IM(V_PRINT2)	IP(V_PRINT2)
1.592 E–01	5.000 E–01	1.800 E+02

FREQ	VM($N_0001)	VP($N_0001)
1.592 E–01	5.664 E–04	8.997 E+01

From this,

$$a = \frac{1}{5.664\text{x}10^{-4}\angle 89.97°} = 1765\angle -89.97°$$

$$c = \frac{0.5\angle 180°}{5.664\text{x}10^{-4}\angle 89.97°} = -882.28\angle -89.97°$$

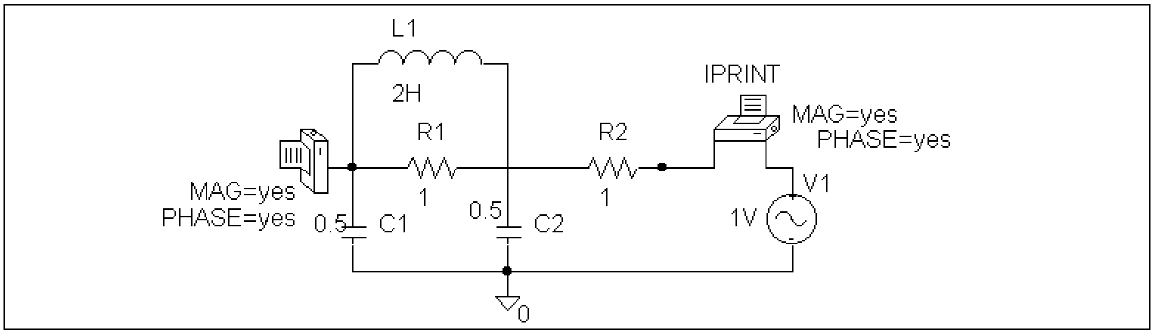

(b) Similarly,

$$b = -\left.\frac{V_2}{I_1}\right|_{V_1=0} \quad \text{and} \quad d = -\left.\frac{I_2}{I_1}\right|_{V_1=0}$$

We short-circuit the input port and let $V_2 = 1$ V. The schematic is shown below. After simulation, we obtain an output file which includes

FREQ	IM(V_PRINT2)	IP(V_PRINT2)
1.592 E–01	5.000 E–01	1.800 E+02

FREQ	IM(V_PRINT3)	IP(V_PRINT3)
1.592 E–01	5.664 E–04	–9.010 E+01

From this, we get

$$b = -\frac{1}{5.664\text{x}10^{-4}\angle -90.1^\circ} = -j1765$$

$$d = -\frac{0.5\angle 180^\circ}{5.664\text{x}10^{-4}\angle -90.1^\circ} = j888.28$$

Thus

$$[t] = \underline{\begin{bmatrix} \mathbf{-j1765} & \mathbf{-j1765} \\ \mathbf{j888.2} & \mathbf{j888.2} \end{bmatrix}}$$

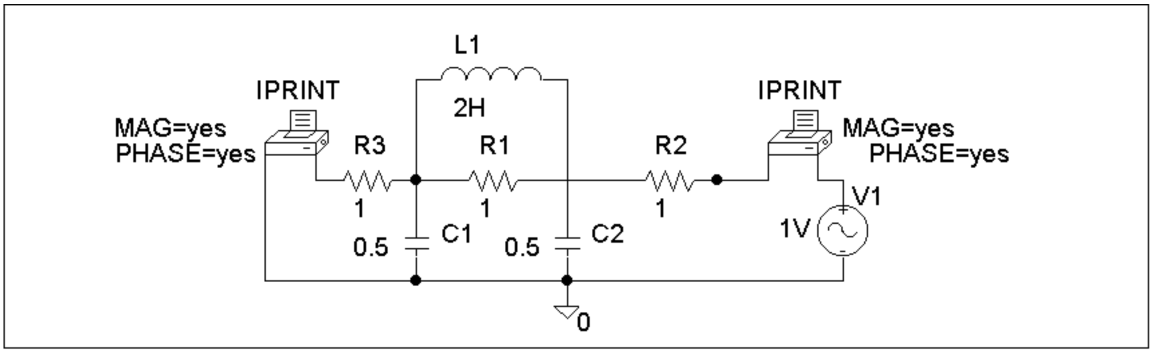

Chapter 19, Solution 88

To get Z_{in}, consider the network in Fig. (a).

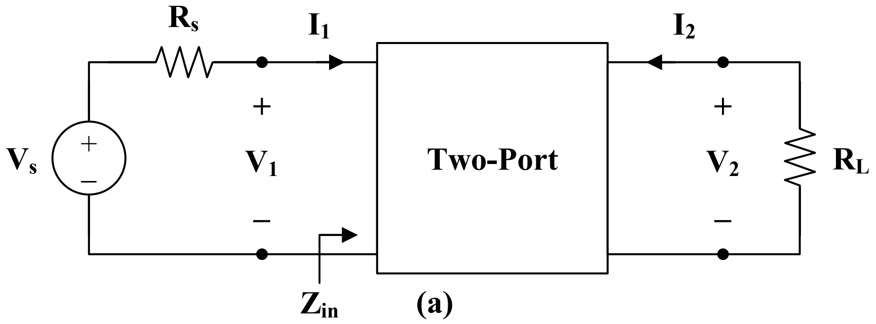

(a)

$$\mathbf{I}_1 = \mathbf{y}_{11}\mathbf{V}_1 + \mathbf{y}_{12}\mathbf{V}_2 \qquad (1)$$
$$\mathbf{I}_2 = \mathbf{y}_{21}\mathbf{V}_1 + \mathbf{y}_{22}\mathbf{V}_2 \qquad (2)$$

But $\mathbf{I}_2 = \dfrac{-\mathbf{V}_2}{R_L} = \mathbf{y}_{21}\mathbf{V}_1 + \mathbf{y}_{22}\mathbf{V}_2$

$$\mathbf{V}_2 = \frac{-\mathbf{y}_{21}\mathbf{V}_1}{\mathbf{y}_{22} + 1/R_L} \qquad (3)$$

Substituting (3) into (1) yields

$$\mathbf{I}_1 = \mathbf{y}_{11}\mathbf{V}_1 + \mathbf{y}_{12}\cdot\left(\frac{-\mathbf{y}_{21}\mathbf{V}_1}{\mathbf{y}_{22} + 1/R_L}\right), \qquad \mathbf{Y}_L = \frac{1}{R_L}$$

$$\mathbf{I}_1 = \left(\frac{\Delta_y + \mathbf{y}_{11}\mathbf{Y}_L}{\mathbf{y}_{22} + \mathbf{Y}_L}\right)\mathbf{V}_1, \qquad \Delta_y = \mathbf{y}_{11}\mathbf{y}_{22} - \mathbf{y}_{12}\mathbf{y}_{21}$$

or $Z_{in} = \dfrac{\mathbf{V}_1}{\mathbf{I}_1} = \underline{\dfrac{\mathbf{y}_{22} + \mathbf{Y}_L}{\Delta_y + \mathbf{y}_{11}\mathbf{Y}_L}}$

$$A_i = \frac{\mathbf{I}_2}{\mathbf{I}_1} = \frac{\mathbf{y}_{21}\mathbf{V}_1 + \mathbf{y}_{22}\mathbf{V}_2}{\mathbf{I}_1} = \mathbf{y}_{21}Z_{in} + \left(\frac{\mathbf{y}_{22}}{\mathbf{I}_1}\right)\left(\frac{-\mathbf{y}_{21}\mathbf{V}_1}{\mathbf{y}_{22} + \mathbf{Y}_L}\right)$$

$$= \mathbf{y}_{21}Z_{in} - \frac{\mathbf{y}_{22}\mathbf{y}_{21}Z_{in}}{\mathbf{y}_{22} + \mathbf{Y}_L} = \left(\frac{\mathbf{y}_{22} + \mathbf{Y}_L}{\Delta_y + \mathbf{y}_{11}\mathbf{Y}_L}\right)\left(\mathbf{y}_{21} - \frac{\mathbf{y}_{22}\mathbf{y}_{21}}{\mathbf{y}_{22} + \mathbf{Y}_L}\right)$$

$$A_i = \underline{\frac{\mathbf{y}_{21}\mathbf{Y}_L}{\Delta_y + \mathbf{y}_{11}\mathbf{Y}_L}}$$

From (3),

$$A_v = \frac{\mathbf{V}_2}{\mathbf{V}_1} = \underline{\frac{-\mathbf{y}_{21}}{\mathbf{y}_{22} + \mathbf{Y}_L}}$$

To get Z_{out}, consider the circuit in Fig. (b).

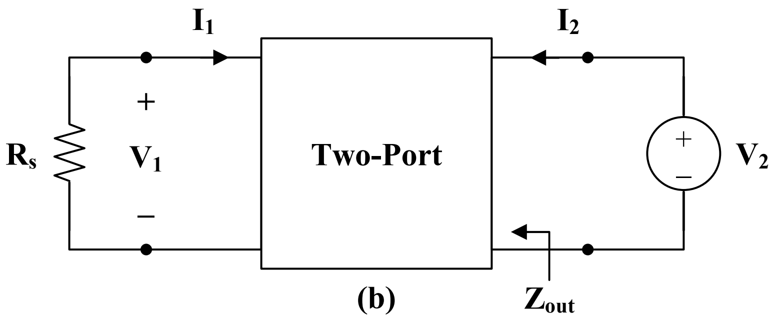

(b)

$$Z_{out} = \frac{\mathbf{V}_2}{\mathbf{I}_2} = \frac{\mathbf{V}_2}{\mathbf{y}_{21}\mathbf{V}_1 + \mathbf{y}_{22}\mathbf{V}_2} \tag{4}$$

But $\mathbf{V}_1 = -R_s \mathbf{I}_1$

Substituting this into (1) yields

$$\mathbf{I}_1 = -\mathbf{y}_{11} R_s \mathbf{I}_1 + \mathbf{y}_{12}\mathbf{V}_2$$

$$(1 + \mathbf{y}_{11} R_s)\mathbf{I}_1 = \mathbf{y}_{12}\mathbf{V}_2$$

$$\mathbf{I}_1 = \frac{\mathbf{y}_{12}\mathbf{V}_2}{1 + \mathbf{y}_{11} R_s} = \frac{-\mathbf{V}_1}{R_s}$$

or $$\frac{\mathbf{V}_1}{\mathbf{V}_2} = \frac{-\mathbf{y}_{12} R_s}{1 + \mathbf{y}_{11} R_s}$$

Substituting this into (4) gives

$$Z_{out} = \frac{1}{\mathbf{y}_{22} - \dfrac{\mathbf{y}_{12}\mathbf{y}_{21} R_s}{1 + \mathbf{y}_{11} R_s}}$$

$$= \frac{1 + \mathbf{y}_{11} R_s}{\mathbf{y}_{22} + \mathbf{y}_{11}\mathbf{y}_{22} R_s - \mathbf{y}_{21}\mathbf{y}_{22} R_s}$$

$$Z_{out} = \underline{\frac{\mathbf{y}_{11} + \mathbf{Y}_s}{\Delta_y + \mathbf{y}_{22}\mathbf{Y}_s}}$$

Chapter 19, Solution 89

$$A_v = \frac{-h_{fe} R_L}{h_{ie} + (h_{ie} h_{oe} - h_{re} h_{fe}) R_L}$$

$$A_v = \frac{-72 \cdot 10^5}{2640 + (2640 \times 16 \times 10^{-6} - 2.6 \times 10^{-4} \times 72) \cdot 10^5}$$

$$A_v = \frac{-72 \cdot 10^5}{2640 + 1824} = \underline{\mathbf{-1613}}$$

$$\text{dc gain} = 20\log\left| A_v \right| = 20\log(1613) = \underline{\mathbf{64.15}}$$

Chapter 19, Solution 90

(a) $$Z_{in} = h_{ie} - \frac{h_{re} h_{fe} R_L}{1 + h_{oe} R_L}$$

$$1500 = 2000 - \frac{10^{-4} \times 120 R_L}{1 + 20 \times 10^{-6} R_L}$$

$$500 = \frac{12 \times 10^{-3}}{1 + 2 \times 10^{-5} R_L}$$

$$500 + 10^{-2} R_L = 12 \times 10^{-3} R_L$$
$$500 \times 10^2 = 0.2 R_L$$
$$R_L = \underline{\mathbf{250\ k\Omega}}$$

(b) $$A_v = \frac{-h_{fe} R_L}{h_{ie} + (h_{ie} h_{oe} - h_{re} h_{fe}) R_L}$$

$$A_v = \frac{-120 \times 250 \times 10^3}{2000 + (2000 \times 20 \times 10^{-6} - 120 \times 10^{-4}) \times 250 \times 10^3}$$

$$A_v = \frac{-30 \times 10^6}{2 \times 10^3 + 7 \times 10^3} = \underline{-3333}$$

$$A_i = \frac{h_{fe}}{1 + h_{oe} R_L} = \frac{120}{1 + 20 \times 10^{-6} \times 250 \times 10^3} = \underline{\mathbf{20}}$$

$$Z_{out} = \frac{R_s + h_{ie}}{(R_s + h_{ie}) h_{oe} - h_{re} h_{fe}} = \frac{600 + 2000}{(600 + 2000) \times 20 \times 10^{-6} - 10^{-4} \times 120}$$

$$Z_{out} = \frac{2600}{40} \text{ k}\Omega = \underline{\mathbf{65\ k\Omega}}$$

(c) $$A_v = \frac{\mathbf{V}_c}{\mathbf{V}_b} = \frac{\mathbf{V}_c}{\mathbf{V}_s} \longrightarrow \mathbf{V}_c = A_v \mathbf{V}_s = -3333 \times 4 \times 10^{-3} = \underline{\mathbf{-13.33\ V}}$$

Chapter 19, Solution 91

$$R_s = 1.2 \text{ k}\Omega, \qquad R_L = 4 \text{ k}\Omega$$

(a) $$A_v = \frac{-h_{fe} R_L}{h_{ie} + (h_{ie} h_{oe} - h_{re} h_{fe}) R_L}$$

$$A_v = \frac{-80 \times 4 \times 10^3}{1200 + (1200 \times 20 \times 10^{-6} - 1.5 \times 10^{-4} \times 80) \times 4 \times 10^3}$$

$$A_v = \frac{-32000}{1248} = \underline{\mathbf{-25.64}}$$

(b) $$A_i = \frac{h_{fe}}{1 + h_{oe} R_L} = \frac{80}{1 + 20 \times 10^{-6} \times 4 \times 10^3} = \underline{\mathbf{74.074}}$$

(c) $$Z_{in} = h_{ie} - h_{re} A_i$$
$$Z_{in} = 1200 - 1.5 \times 10^{-4} \times 74.074 \cong \underline{\mathbf{1.2\ k\Omega}}$$

(d) $$Z_{out} = \frac{R_s + h_{ie}}{(R_s + h_{ie}) h_{oe} - h_{re} h_{fe}}$$

$$Z_{out} = \frac{1200 + 1200}{2400 \times 20 \times 10^{-6} - 1.5 \times 10^{-4} \times 80} = \frac{2400}{0.0468} = \underline{\mathbf{51.282\ k\Omega}}$$

Chapter 19, Solution 92

Due to the resistor $R_E = 240\,\Omega$, we cannot use the formulas in section 18.9.1. We will need to derive our own. Consider the circuit in Fig. (a).

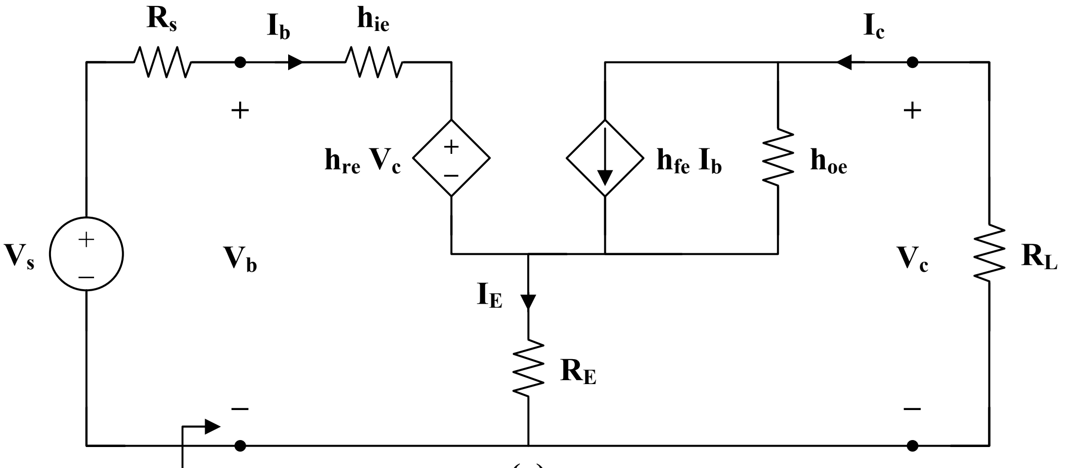

(a)

$$\mathbf{I}_E = \mathbf{I}_b + \mathbf{I}_c \qquad (1)$$

$$\mathbf{V}_b = h_{ie}\,\mathbf{I}_b + h_{re}\,\mathbf{V}_c + (\mathbf{I}_b + \mathbf{I}_c)R_E \qquad (2)$$

$$\mathbf{I}_c = h_{fe}\,\mathbf{I}_b + \frac{\mathbf{V}_c}{R_E + 1/h_{oe}} \qquad (3)$$

But $\quad \mathbf{V}_c = -\mathbf{I}_c\,R_L \qquad (4)$

Substituting (4) into (3),

$$\mathbf{I}_c = h_{fe}\,\mathbf{I}_b - \frac{R_L}{R_E + 1/h_{oe}}\mathbf{I}_c$$

or

$$A_i = \frac{\mathbf{I}_c}{\mathbf{I}_b} = \frac{h_{fe}(1 + R_E h_{oe})}{1 + h_{oe}(R_L} \qquad (5)$$

$$A_i = \frac{100(1 + 240\text{x}30\text{x}10^{-6})}{1 + 30\times10^{-6}(4{,}000 + 240)}$$

$$A_i = \underline{\mathbf{79.18}}$$

From (3) and (5),

$$\mathbf{I}_c = \frac{h_{fe}(1+R_E)h_{oe}}{1+h_{oe}(R_L+R_E)}\mathbf{I}_b = h_{fe}\mathbf{I}_b + \frac{\mathbf{V}_c}{R_E + 1/h_{oe}} \qquad (6)$$

Substituting (4) and (6) into (2),

$$\mathbf{V}_b = (h_{ie}+R_E)\mathbf{I}_b + h_{re}\mathbf{V}_c + \mathbf{I}_c R_E$$

$$\mathbf{V}_b = \frac{\mathbf{V}_c(h_{ie}+R_E)}{\left(R_E + \frac{1}{h_{oe}}\right)\left[\frac{h_{fe}(1+R_E h_{oe})}{1+h_{oe}(R_L+R_E)} - h_{fe}\right]} + h_{re}\mathbf{V}_c - \frac{\mathbf{V}_c}{R_L}R_E$$

$$\frac{1}{A_v} = \frac{\mathbf{V}_b}{\mathbf{V}_c} = \frac{(h_{ie}+R_E)}{\left(R_E + \frac{1}{h_{oe}}\right)\left[\frac{h_{fe}(1+R_E h_{oe})}{1+h_{oe}(R_L+R_E)} - h_{fe}\right]} + h_{re} - \frac{R_E}{R_L} \qquad (7)$$

$$\frac{1}{A_v} = \frac{(4000+240)}{\left(240 + \frac{1}{30x10^{-6}}\right)\left[\frac{100(1+240x30x10^{-6})}{1+30\times10^{-6}\times4240} - 100\right]} + 10^{-4} - \frac{240}{4000}$$

$$\frac{1}{A_v} = -6.06x10^{-3} + 10^{-4} - 0.06 = -0.066$$

$A_v =$ **<u>–15.15</u>**

From (5),

$$\mathbf{I}_c = \frac{h_{fe}}{1+h_{oe}R_L}\mathbf{I}_b$$

We substitute this with (4) into (2) to get

$$\mathbf{V}_b = (h_{ie}+R_E)\mathbf{I}_b + (R_E - h_{re}R_L)\mathbf{I}_c$$

$$\mathbf{V}_b = (h_{ie}+R_E)\mathbf{I}_b + (R_E - h_{re}R_L)\left(\frac{h_{fe}(1+R_E h_{oe})}{1+h_{oe}(R_L+R_E)}\mathbf{I}_b\right)$$

$$Z_{in} = \frac{\mathbf{V}_b}{\mathbf{I}_b} = h_{ie} + R_E + \frac{h_{fe}(R_E - h_{re}R_L)(1+R_E h_{oe})}{1+h_{oe}(R_L+R_E)} \qquad (8)$$

$$Z_{in} = 4000 + 240 + \frac{(100)(240\times10^{-4}\times4\times10^{3})(1+240x30x10^{-6})}{1+30\times10^{-6}\times4240}$$

$Z_{in} =$ **<u>12.818 kΩ</u>**

To obtain Z_{out}, which is the same as the Thevenin impedance at the output, we introduce a 1-V source as shown in Fig. (b).

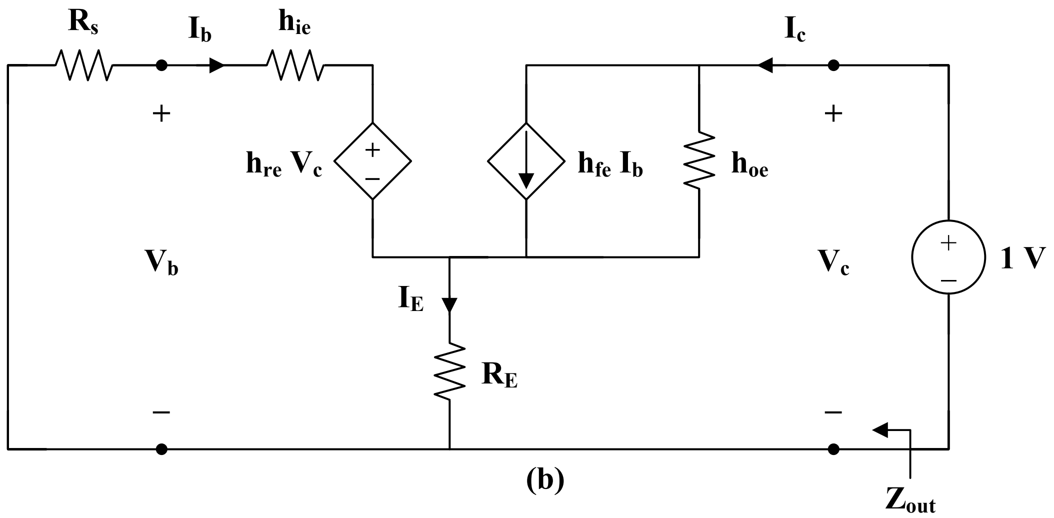

(b)

From the input loop,

$$\mathbf{I}_b(R_s + h_{ie}) + h_{re}\mathbf{V}_c + R_E(\mathbf{I}_b + \mathbf{I}_c) = 0$$

But $\quad \mathbf{V}_c = 1$

So,

$$\mathbf{I}_b(R_s + h_{ie} + R_E) + h_{re} + R_E\mathbf{I}_c = 0 \qquad (9)$$

From the output loop,

$$\mathbf{I}_c = \frac{\mathbf{V}_c}{R_E + \dfrac{1}{h_{oe}}} + h_{fe}\mathbf{I}_b = \frac{h_{oe}}{R_E h_{oe} + 1} + h_{fe}\mathbf{I}_b$$

or

$$\mathbf{I}_b = \frac{\mathbf{I}_c}{h_{fe}} - \frac{h_{oe}/h_{fe}}{1 + R_E h_{oe}} \qquad (10)$$

Substituting (10) into (9) gives

$$(R_s + R_E + h_{ie})\left(\frac{\mathbf{I}_c}{h_{fe}}\right) + h_{re} + R_E\mathbf{I}_c - \frac{(R_s + R_E + h_{ie})\left(h_{oe}/h_{fe}\right)}{1 + R_E h_{oe}} = 0$$

$$\frac{R_s + R_E + h_{ie}}{h_{fe}}\mathbf{I}_c + R_E\mathbf{I}_c = \frac{R_s + R_E + h_{ie}}{1 + R_E h_{oe}}\left(\frac{h_{oe}}{h_{fe}}\right) - h_{re}$$

$$\mathbf{I}_c = \frac{(h_{oe}/h_{fe})\left[\dfrac{R_s + R_E + h_{ie}}{1 + R_E h_{oe}}\right] - h_{re}}{R_E + (R_s + R_E + h_{ie})/h_{fe}}$$

$$Z_{out} = \frac{1}{\mathbf{I}_c} = \frac{R_E h_{fe} + R_s + R_E + h_{ie}}{\left[\dfrac{R_s + R_E + h_{ie}}{1 + R_E h_{oe}}\right] h_{oe} - h_{re} h_{fe}}$$

$$Z_{out} = \frac{240 \times 100 + (1200 + 240 + 4000)}{\left[\dfrac{1200 + 240 + 4000}{1 + 240x30x10^{-6}}\right] \times 30 \times 10^{-6} - 10^{-4} \times 100}$$

$$Z_{out} = \frac{24000 + 5440}{0.152} = \underline{\mathbf{193.7\ k\Omega}}$$

Chapter 19, Solution 93

We apply the same formulas derived in the previous problem.

$$\frac{1}{A_v} = \frac{(h_{ie} + R_E)}{\left(R_E + \dfrac{1}{h_{oe}}\right)\left[\dfrac{h_{fe}(1 + R_E h_{oe})}{1 + h_{oe}(R_L + R_E)} - h_{fe}\right]} + h_{re} - \frac{R_E}{R_L}$$

$$\frac{1}{A_v} = \frac{(2000 + 200)}{(200 + 10^5)\left[\dfrac{150(1 + 0.002)}{1 + 0.04} - 150\right]} + 2.5 \times 10^{-4} - \frac{200}{3800}$$

$$\frac{1}{A_v} = -0.004 + 2.5 \times 10^{-4} - 0.05263 = -0.05638$$

$$A_v = \underline{\mathbf{-17.74}}$$

$$A_i = \frac{h_{fe}(1 + R_E h_{oe})}{1 + h_{oe}(R_L + R_E)} = \frac{150(1 + 200x10^{-5})}{1 + 10^{-5} \times (200 + 3800)} = \underline{\mathbf{144.5}}$$

$$Z_{in} = h_{ie} + R_E + \frac{h_{fe}(R_E - h_{re} R_L)(1 + R_E h_{oe})}{1 + h_{oe}(R_L + R_E)}$$

$$Z_{in} = 2000 + 200 + \frac{(150)(200 - 2.5\times10^{-4}\times3.8\times10^{3})(1.002)}{1.04}$$

$$Z_{in} = 2200 + 28966$$

$$Z_{in} = \underline{\mathbf{31.17\ k\Omega}}$$

$$Z_{out} = \frac{R_E h_{fe} + R_s + R_E + h_{ie}}{\left[\dfrac{R_s + R_E + h_{ie}}{1 + R_E h_{oe}}\right] h_{oe} - h_{re} h_{fe}}$$

$$Z_{out} = \frac{200\times150 + 1000 + 200 + 2000}{\left[\dfrac{3200\times10^{-5}}{1.002}\right] - 2.5\times10^{-4}\times150} = \frac{33200}{-0.0055}$$

$$Z_{out} = \underline{\mathbf{-6.148\ M\Omega}}$$

Chapter 19, Solution 94

We first obtain the **ABCD** parameters.

Given $[\mathbf{h}] = \begin{bmatrix} 200 & 0 \\ 100 & 10^{-6} \end{bmatrix}$, $\Delta_h = \mathbf{h}_{11}\mathbf{h}_{22} - \mathbf{h}_{12}\mathbf{h}_{21} = 2\times10^{-4}$

$$[\mathbf{T}] = \begin{bmatrix} \dfrac{\Delta_h}{\mathbf{h}_{21}} & \dfrac{-\mathbf{h}_{11}}{\mathbf{h}_{21}} \\ \dfrac{-\mathbf{h}_{22}}{\mathbf{h}_{21}} & \dfrac{-1}{\mathbf{h}_{21}} \end{bmatrix} = \begin{bmatrix} -2\times10^{-6} & -2 \\ -10^{-8} & -10^{-2} \end{bmatrix}$$

The overall **ABCD** parameters for the amplifier are

$$[\mathbf{T}] = \begin{bmatrix} -2\times10^{-6} & -2 \\ -10^{-8} & -10^{-2} \end{bmatrix}\begin{bmatrix} -2\times10^{-6} & -2 \\ -10^{-8} & -10^{-2} \end{bmatrix} \cong \begin{bmatrix} 2\times10^{-8} & 2\times10^{-2} \\ 10^{-10} & 10^{-4} \end{bmatrix}$$

$$\Delta_T = 2\times10^{-12} - 2\times10^{-12} = 0$$

$$[\mathbf{h}] = \begin{bmatrix} \dfrac{\mathbf{B}}{\mathbf{D}} & \dfrac{\Delta_T}{\mathbf{D}} \\ \dfrac{-1}{\mathbf{D}} & \dfrac{\mathbf{C}}{\mathbf{D}} \end{bmatrix} = \begin{bmatrix} 200 & 0 \\ -10^{-4} & 10^{-6} \end{bmatrix}$$

Thus, $h_{ie} = 200$, $h_{re} = 0$, $h_{fe} = -10^{-4}$, $h_{oe} = 10^{-6}$

$$A_v = \frac{(10^4)(4\times10^3)}{200 + (2\times10^{-4} - 0)\times 4\times10^3} = \underline{\mathbf{2\times10^5}}$$

$$Z_{in} = h_{ie} - \frac{h_{re}\,h_{fe}\,R_L}{1 + h_{oe}\,R_L} = 200 - 0 = \underline{\mathbf{200\,\Omega}}$$

Chapter 19, Solution 95

Let $\mathbf{Z}_A = \dfrac{1}{\mathbf{y}_{22}} = \dfrac{s^4 + 10s^2 + 8}{s^3 + 5s}$

Using long division,

$$\mathbf{Z}_A = s + \frac{5s^2 + 8}{s^3 + 5s} = sL_1 + \mathbf{Z}_B$$

i.e. $L_1 = 1\,H$ and $\mathbf{Z}_B = \dfrac{5s^2 + 8}{s^3 + 5s}$

as shown in Fig (a).

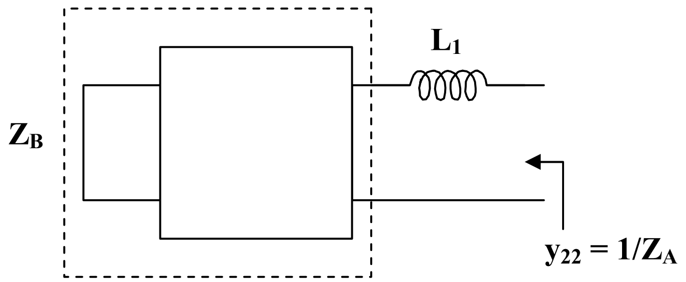

(a)

$$\mathbf{Y}_B = \frac{1}{\mathbf{Z}_B} = \frac{s^3 + 5s}{5s^2 + 8}$$

Using long division,

$$\mathbf{Y}_B = 0.2s + \frac{3.4s}{5s^2 + 8} = sC_2 + \mathbf{Y}_C$$

where $C_2 = 0.2\,F$ and $\mathbf{Y}_C = \dfrac{3.4s}{5s^2 + 8}$

as shown in Fig. (b).

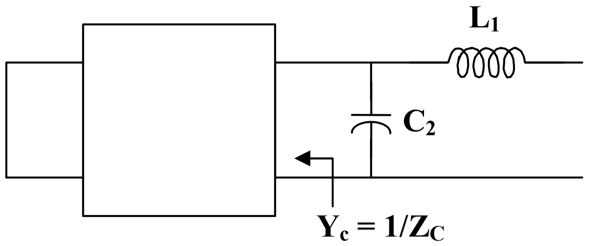

(b)

$$\mathbf{Z}_C = \frac{1}{\mathbf{Y}_C} = \frac{5s^2 + 8}{3.4s} = \frac{5s}{3.4} + \frac{8}{3.4s} = sL_3 + \frac{1}{sC_4}$$

i.e. an inductor in series with a capacitor

$$L_3 = \frac{5}{3.4} = 1.471\text{ H} \quad \text{and} \quad C_4 = \frac{3.4}{8} = 0.425\text{ F}$$

Thus, **<u>the LC network is shown in Fig. (c)</u>**.

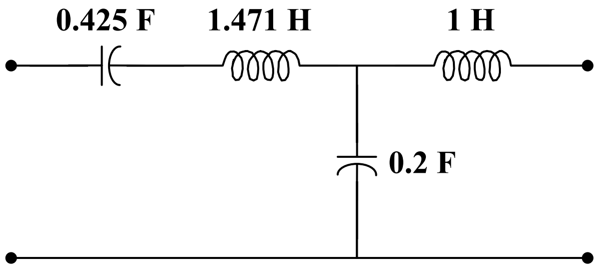

(c)

Chapter 19, Solution 96

This is a fourth order network which can be realized with the network shown in Fig. (a).

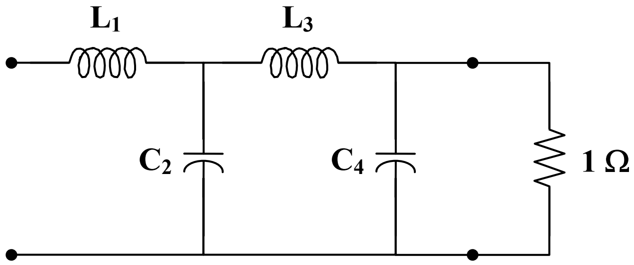

(a)

$$\Delta(s) = (s^4 + 3.414s^2 + 1) + (2.613s^3 + 2.613s)$$

$$H(s) = \frac{\dfrac{1}{2.613s^3 + 2.613s}}{1 + \dfrac{s^4 + 3.414s^2 + 1}{2.613s^3 + 2.613s}}$$

which indicates that

$$\mathbf{y}_{21} = \frac{-1}{2.613s^3 + 2.613s}$$

$$\mathbf{y}_{22} = \frac{s^4 + 3.414s + 1}{2.613s^3 + 2.613s}$$

We seek to realize $\mathbf{y}_{22}$. By long division,

$$\mathbf{y}_{22} = 0.383s + \frac{2.414s^2 + 1}{2.613s^3 + 2.613s} = s\,C_4 + \mathbf{Y}_A$$

i.e. $\qquad C_4 = 0.383\ \text{F} \qquad$ and $\qquad \mathbf{Y}_A = \dfrac{2.414s^2 + 1}{2.613s^3 + 2.613s}$

as shown in Fig. (b).

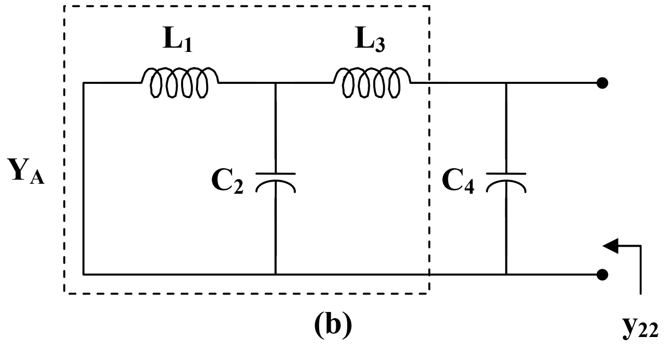

(b)

$$\mathbf{Z}_A = \frac{1}{\mathbf{Y}_A} = \frac{2.613s^3 + 2.613s}{2.414s^2 + 1}$$

By long division,

$$\mathbf{Z}_A = 1.082s + \frac{1.531s}{2.414s^2 + 1} = s\,L_3 + \mathbf{Z}_B$$

i.e. $\qquad L_3 = 1.082\ \text{H} \qquad$ and $\qquad \mathbf{Z}_B = \dfrac{1.531s}{2.414s^2 + 1}$

as shown in Fig.(c).

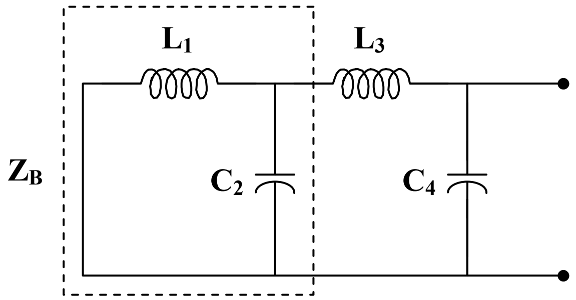

(c)

$$\mathbf{Y}_B = \frac{1}{\mathbf{Z}_B} = 1.577s + \frac{1}{1.531s} = sC_2 + \frac{1}{sL_1}$$

i.e. $C_2 = 1.577\text{ F}$ and $L_1 = 1.531\text{ H}$

Thus, **<u>the network is shown in Fig. (d)</u>**.

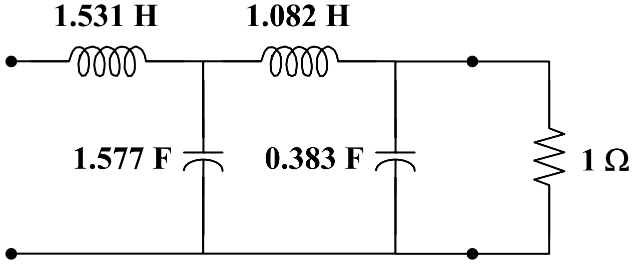

(d)

Chapter 19, Solution 97

$$H(s) = \frac{s^3}{(s^3 + 12s) + (6s^2 + 24)} = \frac{\dfrac{s^3}{s^3 + 12s}}{1 + \dfrac{6s^2 + 24}{s^3 + 12s}}$$

Hence,

$$\mathbf{y}_{22} = \frac{6s^2 + 24}{s^3 + 12s} = \frac{1}{sC_3} + \mathbf{Z}_A \qquad (1)$$

where $\mathbf{Z}_A$ is shown in the figure below.

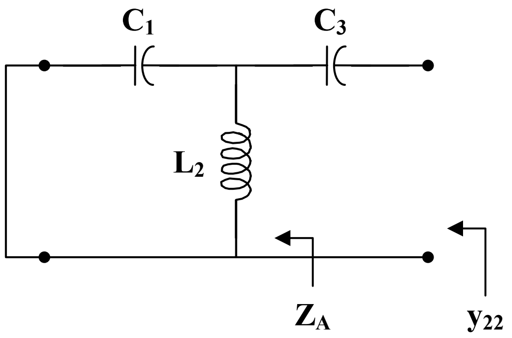

We now obtain C_3 and $\mathbf{Z}_A$ using partial fraction expansion.

Let
$$\frac{6s^2+24}{s(s^2+12)} = \frac{A}{s} + \frac{Bs+C}{s^2+12}$$

$$6s^2+24 = A(s^2+12) + Bs^2 + Cs$$

Equating coefficients :

$$s^0: \quad 24 = 12A \longrightarrow A = 2$$
$$s^1: \quad 0 = C$$
$$s^2: \quad 6 = A + B \longrightarrow B = 4$$

Thus,
$$\frac{6s^2+24}{s(s^2+12)} = \frac{2}{s} + \frac{4s}{s^2+12} \tag{2}$$

Comparing (1) and (2),
$$C_3 = \frac{1}{A} = \frac{1}{2}\,\text{F}$$

$$\frac{1}{\mathbf{Z}_A} = \frac{s^2+12}{4s} = \frac{1}{4}s + \frac{3}{s} \tag{3}$$

But
$$\frac{1}{\mathbf{Z}_A} = sC_1 + \frac{1}{sL_2} \tag{4}$$

Comparing (3) and (4),
$$C_1 = \frac{1}{4}\,\text{F} \quad \text{and} \quad L_2 = \frac{1}{3}\,\text{H}$$

Therefore,
$$C_1 = \underline{\mathbf{0.25\ F}}, \quad L_2 = \underline{\mathbf{0.3333\ H}}, \quad C_3 = \underline{\mathbf{0.5\ F}}$$

Chapter 19, Solution 98

$$\Delta_h = 1 - 0.8 = 0.2$$

$$[T_a] = [T_b] = \begin{bmatrix} -\Delta_h / h_{21} & -h_{11}/h_{21} \\ -h_{22}/h_{21} & -1/h_{21} \end{bmatrix} = \begin{bmatrix} -0.001 & -10 \\ -2.5x10^{-6} & -0.005 \end{bmatrix}$$

$$[T] = [T_a][T_b] = \begin{bmatrix} 2.6x10^{-5} & 0.06 \\ 1.5x10^{-8} & 5x10^{-5} \end{bmatrix}$$

We now convert this to z-parameters

$$[z] = \begin{bmatrix} A/C & \Delta_T/C \\ 1/C & D/C \end{bmatrix} = \begin{bmatrix} 1.733x10^3 & 0.0267 \\ 6.667x10^7 & 3.33x10^3 \end{bmatrix}$$

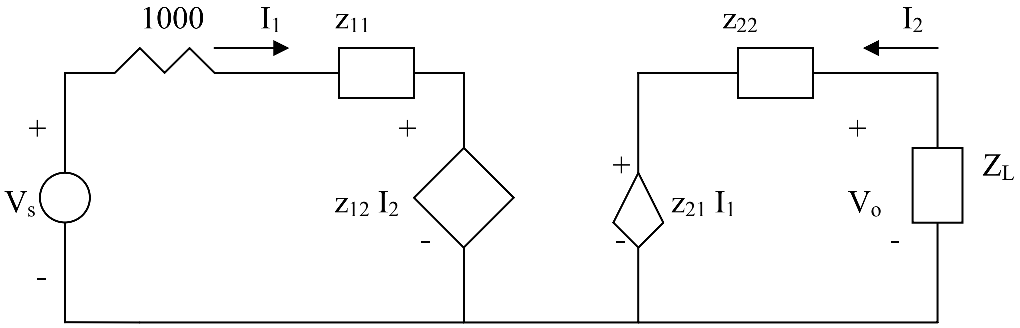

$$V_s = (1000 + z_{11})I_1 + z_{12}I_2 \qquad (1)$$

$$V_o = z_{22}I_2 + z_{21}I_1 \qquad (2)$$

But $V_o = -I_2 Z_L \longrightarrow I_2 = -V_o / Z_L$ (3)

Substituting (3) into (2) gives

$$I_1 = V_o\left(\frac{1}{z_{21}} + \frac{z_{22}}{z_{21}Z_L}\right) \qquad (4)$$

We substitute (3) and (4) into (1)

$$V_s = (1000 + z_{11})\left(\frac{1}{z_{11}} + \frac{z_{22}}{z_{21}Z_L}\right)V_o - \frac{z_{12}}{Z_L}V_o$$

$$= 7.653x10^{-4} - 2.136x10^{-5} = \underline{744\mu V}$$

Chapter 19, Solution 99

$$\mathbf{Z}_{ab} = \mathbf{Z}_1 + \mathbf{Z}_3 = \mathbf{Z}_c \,||\, (\mathbf{Z}_b + \mathbf{Z}_a)$$

$$\mathbf{Z}_1 + \mathbf{Z}_3 = \frac{\mathbf{Z}_c(\mathbf{Z}_a + \mathbf{Z}_b)}{\mathbf{Z}_a + \mathbf{Z}_b + \mathbf{Z}_c} \qquad (1)$$

$$\mathbf{Z}_{cd} = \mathbf{Z}_2 + \mathbf{Z}_3 = \mathbf{Z}_a \,||\, (\mathbf{Z}_b + \mathbf{Z}_c)$$

$$\mathbf{Z}_2 + \mathbf{Z}_3 = \frac{\mathbf{Z}_a(\mathbf{Z}_b + \mathbf{Z}_c)}{\mathbf{Z}_a + \mathbf{Z}_b + \mathbf{Z}_c} \qquad (2)$$

$$\mathbf{Z}_{ac} = \mathbf{Z}_1 + \mathbf{Z}_2 = \mathbf{Z}_b \,||\, (\mathbf{Z}_a + \mathbf{Z}_c)$$

$$\mathbf{Z}_1 + \mathbf{Z}_2 = \frac{\mathbf{Z}_b(\mathbf{Z}_a + \mathbf{Z}_c)}{\mathbf{Z}_a + \mathbf{Z}_b + \mathbf{Z}_c} \qquad (3)$$

Subtracting (2) from (1),

$$\mathbf{Z}_1 - \mathbf{Z}_2 = \frac{\mathbf{Z}_b(\mathbf{Z}_c - \mathbf{Z}_a)}{\mathbf{Z}_a + \mathbf{Z}_b + \mathbf{Z}_c} \qquad (4)$$

Adding (3) and (4),

$$\mathbf{Z}_1 = \underline{\frac{\mathbf{Z_b Z_c}}{\mathbf{Z_a + Z_b + Z_c}}} \qquad (5)$$

Subtracting (5) from (3),

$$\mathbf{Z}_2 = \underline{\frac{\mathbf{Z_a Z_b}}{\mathbf{Z_a + Z_b + Z_c}}} \qquad (6)$$

Subtracting (5) from (1),

$$\mathbf{Z}_3 = \underline{\frac{\mathbf{Z_c Z_a}}{\mathbf{Z_a + Z_b + Z_c}}} \qquad (7)$$

Using (5) to (7)

$$\mathbf{Z}_1\mathbf{Z}_2 + \mathbf{Z}_2\mathbf{Z}_3 + \mathbf{Z}_3\mathbf{Z}_1 = \frac{\mathbf{Z}_a\mathbf{Z}_b\mathbf{Z}_c(\mathbf{Z}_a + \mathbf{Z}_b + \mathbf{Z}_c)}{(\mathbf{Z}_a + \mathbf{Z}_b + \mathbf{Z}_c)^2}$$

$$\mathbf{Z}_1\mathbf{Z}_2 + \mathbf{Z}_2\mathbf{Z}_3 + \mathbf{Z}_3\mathbf{Z}_1 = \frac{\mathbf{Z}_a\mathbf{Z}_b\mathbf{Z}_c}{\mathbf{Z}_a + \mathbf{Z}_b + \mathbf{Z}_c} \qquad (8)$$

Dividing (8) by each of (5), (6), and (7),

$$\mathbf{Z}_a = \frac{\mathbf{Z}_1\mathbf{Z}_2 + \mathbf{Z}_2\mathbf{Z}_3 + \mathbf{Z}_3\mathbf{Z}_1}{\mathbf{Z}_1}$$

$$\mathbf{Z}_b = \frac{\mathbf{Z}_1\mathbf{Z}_2 + \mathbf{Z}_2\mathbf{Z}_3 + \mathbf{Z}_3\mathbf{Z}_1}{\mathbf{Z}_3}$$

$$\mathbf{Z}_c = \frac{\mathbf{Z}_1\mathbf{Z}_2 + \mathbf{Z}_2\mathbf{Z}_3 + \mathbf{Z}_3\mathbf{Z}_1}{\mathbf{Z}_2}$$

as required. Note that the formulas above are not exactly the same as those in Chapter 9 because the locations of $\mathbf{Z}_b$ and $\mathbf{Z}_c$ are interchanged in Fig. 18.122.